NASA Contractor Report 178349

Low Speed Wind Tunnel Test of a Propulsive Wing/Canard Concept in the STOL Configuration

Volume II: Test Data

V. R. Stewart

ROCKWELL INTERNATIONAL CORPORATION

Columbus, Ohio 43216

Contract NAS1-17171

September 1987

(NASA-CR-178349) LOW SPEED WIND TUNNEL TEST OF A PROPULSIVE WING/CANARD CONCEPT IN THE STOL CONFIGURATION. VOLUME 2: TEST DATA (Rockwell International Corp.) 405 p Avail: NTIS HC A18/MF A01 CSCL 01A G3/02

N87-27642

Unclas 0097191

National Aeronautics and Space Administration

Langley Research Center
Hampton, Virginia 23665-5225

NASA Contractor Report 178349

Low Speed Wind Tunnel Test of a Propulsive Wing/Canard Concept in the STOL Configuration

Volume II: Test Data

V. R. Stewart

ROCKWELL INTERNATIONAL CORPORATION
Columbus, Ohio 43216

Contract NAS1-17171
September 1987

National Aeronautics and
Space Administration

Langley Research Center
Hampton, Virginia 23665-5225

ABSTRACT

A propulsive wing/canard model has been tested at STOL operating conditions in the NASA Langley Research Center 4 x 7 meter wind tunnel. Longitudinal and lateral/directional aerodynamic characteristics were measured for various flap deflections, angles of attack and sideslip, and blowing coefficients. Testing was conducted for several model heights to determine ground proximity effects on the aerodynamic characteristics. Flow field surveys of local flow angles and velocities were performed behind both the canard and the wing.

This report consists of two volumes. Volume I (NASA CR-178348) describes the model, instrumentation, and test procedures; and includes an analysis of the data. Volume II (NASA CR-178349) contains all of the test data in three appendices. Appendix A presents tabulated six component force and moment data, Appendix B presents tabulated wing pressure coefficients, and Appendix C presents the flow field data.

PRECEDING PAGE BLANK NOT FILMED

PAGE ii INTENTIONALLY BLANK

TABLE OF CONTENTS

SECTION	TITLE	PAGE
	ABSTRACT.	iii
	TABLE OF CONTENTS	v
	LIST OF SYMBOLS	vi
	LIST OF FIGURES	viii
	LIST OF TABLES.	ix
1.0	INTRODUCTION.	1
APPENDIX A	TABULATED FORCE DATA.	A-1 thru A-166
APPENDIX B	TABULATED WING PRESSURE DATA.	B-1 thru B-118
APPENDIX C	TABULATED FLOW FIELD DATA	C-1 thru C-96

PRECEDING PAGE BLANK NOT FILMED

PAGE iv INTENTIONALLY BLANK

LIST OF SYMBOLS

Following is a list of computer generated expressions used in Volume II to present the tabulated wind tunnel data.

Appendix A - Tabulated Force Data

RUN	Test Run Number
PT	Test Point Number
Q	Dynamic Pressure
ALPHA	Model Angle of Attack
BETA	Model Angle of Sideslip
REY NO	Reynolds Number
HEIGHT	Height above Floor, Inches
CL1S	Lift Coefficient, Stability Axis
CD1S	Drag Coefficient, Stability Axis
CPM1S	Pitching Moment Coefficient, Stability Axis
CRM1S	Rolling Moment Coefficient, Stability Axis
CYM1S	Yawing Moment Coefficient, Stability Axis
CSF1S	Side Force Coefficient, Stability Axis
CNF1B	Normal Force Coefficient, Body Axis
CAF1B	Axial Force Coefficient, Body Axis
CPM1B	Pitching Moment Coefficient, Body Axis
CRM1B	Rolling Moment Coefficient, Body Axis
CYM1B	Yawing Moment Coefficient, Body Axis
CSF1B	Side Force Coefficient, Body Axis
CMUC	Canard Blowing Coefficient
CMUW	Wing Blowing Coefficient
CMUT	Total (Canard + Wing) Blowing Coefficient
CLTR	Thrust Removed Lift Coefficient
CDTR	Thrust Removed Drag Coefficient
CMTR	Thrust Removed Pitching Moment Coefficient
HP	Probe Height above Ground, Inches
X, Y, Z	Probe Location Relative to Canard Nozzle, Inches
H	Height from Ground to FRL, Inches
DELC	Canard Deflection (Incidence), Degrees
DELFC	Canard Flap Deflection, Degrees
DELFW	Wing Flap Deflection, Degrees
BN/BW	Ratio of Nozzle Span to Surface Span, Wing
BN/BC	Ratio of Nozzle Span to Surface Span, Canard
H/C	Height Measured in Chord Lengths
FRL	Fuselage Reference Line

LIST OF SYMBOLS (Cont'd)

Appendix B - Tabulated Wing Pressure Data

RUN	Test Run Number
POINT	Test Point Number
ALPHA	Model Angle of Attack
PSI	Model Angle of Sideslip
HEIGHT	Model Height Above Ground, Inches
X/C	Percent of Local Chord
BP	Butt Plane Measured from Fuselage Mold Line

Appendix C - Tabulated Flow Field Data

RUN	Test Run Number
PT	Test Data Point Number
ALPHA	Angle of Attack
BETA	Angle of Sideslip
HEIGHT	Height Above Ground
VT	Velocity Feet/Second (Number denotes probe)
ALP	Local Angle of Attack at Probe
BET	Local Angle of Sideslip at Probe

LIST OF FIGURES

FIGURE NO.	TITLE	PAGE
1	Wing Surface Pressure Tap Locations.	10
2	Location of Flow Field Survey Rake with Respect to Model	11
3	Profile View of Model with Survey Rake in Vertical Position Aft of Trailing Edge of Wing Flap.	12
4	Nose-On View of Model with Survey Rake in Horizontal Position Aft of Trailing Edge of Canard Flap	13

LIST OF TABLES

TABLE NO.	TITLE	PAGE
1	Propulsive Wing Test Run Schedule.	2
2	Range of Variables for Run Schedule.	8
3	Survey Rake Locations.	9

SECTION 1.0

INTRODUCTION

This volume lists the conditions for all data runs performed (see Tables 1, 2, and 3) and tabulates the results obtained. These results are tabulated in Appendices A, B, and C of this volume for force data, wing surface pressure data, and flow field (rake survey) data. The force data of Appendix A reflects the output from the 6-component internal balance-converted into coefficient form. Figure 1 shows the location of all wing surface tap locations used during the generation of the Appendix B data; Figures 2, 3, and 4 describe the flow field survey rake used during the acquisition of the Appendix C flow field data.

TABLE 1 PROPULSIVE WING TEST RUN SCHEDULE

RUN #	CONFIG	Q	BETA	ALPHA	DELC	DELFC	DELFW	BW/BW	BW/BC	CHOW	CHOC	H/C	REMARKS
100	B2C1W6V	2.63	0	A	0	0	0	1	1	0	0	-	
101	B2C1W6V	5.25	0	A	0	0	0	1	1	0	0	-	
102	B2C1W6V	10.5	0	A	0	0	0	1	1	0	0	-	
103	B2C1W6V	10.5	0	A	0	0	0	1	1	1.0	0.5	-	
104	B2C1W6V	5.25	0	A	0	0	0	1	1	2.0	1.0	-	
105	B2C1W6V	30	0	A	0	0	0	1	1	0	0	-	REPEAT OF RUN 100
106	B2C1W6V	21	0	A	0	0	0	1	1	0.5	0.25	-	
107	B2C1W6V	10.5	0	A	0	0	0	1	1	1.0	0.5	-	REPEAT OF RUN 103
108	B2C1W6V	5.25	0	A	0	0	0	1	1	2.0	1.0	-	REPEAT OF RUN 104
109	B2W6V			WT. TARE									
110	B2W6V	30	0	A	-	-	0	1	-	0	-	-	
111	B2W6V	21	0	A	-	-	0	1	-	0.5	-	-	
112	B2W6V	10.5	0	A	-	-	0	1	-	1.0	-	-	
113	B2W6V	5.25	0	A	-	-	0	1	-	2.0	-	-	
114	B2W6V	30	5	A	-	-	0	1	-	0	-	-	
115	B2W6V	21	5	A	-	-	0	1	-	0.5	-	-	
116	B2W6V	10.5	5	A	-	-	0	1	-	1.0	-	-	
117	B2W6V	5.25	5	A	-	-	0	1	-	2.0	-	-	
118	B2W6			WT. TARE									
119	B2W6	30	0	A	-	-	0	1	-	0	-	-	
120	B2W6	21	0	A	-	-	0	1	-	0.5	-	-	
121	B2W6	10.5	0	A	-	-	0	1	-	1.0	-	-	
122	B2W6	5.25	0	A	-	-	0	1	-	2.0	-	-	
123	B2W6	30	5	A	-	-	0	1	-	0	-	-	
124	B2W6	21	5	A	-	-	0	1	-	0.5	-	-	
125	B2W6	10.5	5	A	-	-	0	1	-	1.0	-	-	
126	B2W6	5.25	5	A	-	-	0	1	-	2.0	-	-	
127	B2C1V				WT. TARE								
128	B2C1V	30	0	A	0	0	-	-	1	-	0	-	
129	B2C1V	21	0	A	0	0	-	-	1	-	0.25	-	
130	B2C1V	10.5	0	A	0	0	-	-	1	-	0.5	-	
131	B2C1V	5.25	0	A	0	0	-	-	1	-	1.0	-	
132	B2V	30	0	A	-	-	-	-	-	-	-	-	
133	B2V	30	A	0	-	-	-	-	-	-	-	-	
134	B2V	30	5	A	-	-	-	-	-	-	-	-	
135	B2	30	0	A	-	-	-	-	-	-	-	-	
136	B2	30	A	0	-	-	-	-	-	-	-	-	
137	B2	30	A	5	-	-	-	-	-	-	-	-	
138	B2	30	5	A	-	-	-	-	-	-	-	-	
139	B2W6				WT. TARE								
140	B2W6				NO DATA								
142	B2W6				NO DATA								
143	B2W6	30	5	A	-	-	45	1	-	0	-	-	
144 & 147				THRUST CALIBRATION									
145				WT. TARE									
146				NOZZLE CALIBRATION									
148	B2W8	30	0	A	-	-	45	1	-	0	-	-	
149	B2W8	16.5	0	A	-	-	45	1	-	0.5	-	-	
150	B2W8	10.5	0	A	-	-	45	1	-	1.0	-	-	
151	BEW8	5.25	0	A	-	-	45	1	-	2.0	-	-	
152	B2W8	16.5	5	A	-	-	45	1	-	0.5	-	-	
153	B2W8	10.5	5	A	-	-	45	1	-	1.0	-	-	
154	B2W8	5.25	5	A	-	-	45	1	-	2.0	-	-	
155	B2W8	30	A	0	-	-	45	1	-	0	-	-	
156	B2W8	16.5	A	0	-	-	45	1	-	0.5	-	-	
157	B2W8	10.5	A	0	-	-	45	1	-	1.0	-	-	
158	B2W8	30	A	8	-	-	45	1	-	0	-	-	

TABLE 1 PROPULSIVE WING TEST RUN SCHEDULE (Cont'd)

RUN #	CONFIG	Q	BETA	ALPHA	DELC	DELFC	DELFW	BW/BW	BN/BC	CMUW	CMUC	H/C	REMARKS
159	B2W8	16.5	A	8	-	-	45	1	-	0.5	-	-	
160	B2W8	10.5	A	8	-	-	45	1	-	1.0	-	-	
161	B2W8	5.25	A	8	-	-	45	1	-	2.0	-	-	
162	B2W8	5.25	A	0	-	-	45	1	-	2.0	-	-	
163	B2W8V	30	0	A	-	-	45	1	-	0	-	-	
164	B2W8V	30	5	A	-	-	45	1	-	0	-	-	
165	B2W8V	30	A	0	-	-	45	1	-	0	-	-	
166	B2W8V	30	A	8	-	-	45	1	-	0	-	-	
167	B2W8V	16.6	A	8	-	-	45	1	-	0.5	-	-	
168	B2W8V	16.6	A	0	-	-	45	1	-	0.5	-	-	
169	B2W8V	16.6	5	A	-	-	45	1	-	0.5	-	-	
170	B2W8V	16.6	0	A	-	-	45	1	-	0.5	-	-	
171	B2W8V	10.5	0	A	-	-	45	1	-	1.0	-	-	
172	B2W8V	10.5	5	A	-	-	45	1	-	1.0	-	-	
173	B2W8V	10.5	A	0	-	-	45	1	-	1.0	-	-	
174	B2W8V	10.5	A	8	-	-	45	1	-	1.0	-	-	
175	B2W8V	5.25	A	8	-	-	45	1	-	2.0	-	-	
176	B2W8V	5.25	A	0	-	-	45	1	-	2.0	-	-	
177	B2W8V	5.25	5	A	-	-	45	1	-	2.0	-	-	
178	B2W8V	5.25	0	A	-	-	45	1	-	2.0	-	-	
179	B2W8V	2.62	0	A	-	-	45	1	-	4.0	-	-	
180	B2W8V	1.31	0	A	-	-	45	1	-	8.0	-	-	
181	B2C9W8V			WT. TARE									
182	B2C9W8V			WT.TARE									
183	B2C9W8V			NOZZLE THRUST CALIBRATION									
184	B2C9W8V	30	0	A	0	45	45	1	1	0	0	-	
185	B2C9W8V	30	5	A	0	45	45	1	1	0	0	-	
186	B2C9W8V	30	A	0	0	45	45	1	1	0	0	-	
187	B2C9W8V	30	A	8	0	45	45	1	1	0	0	-	
188	B2C9W8V	THRUST CALIBRATION											
189	B2C9W8V	NOZZLE CALIBRATION											
190 & 191		THRUST CALIBRATION											
192	B2C9W8V	21	0	A	0	45	45	1	1	0.5	0.25	-	
193	B2C9W8V	10.5	0	A	0	45	45	1	1	1.0	0.50	-	
194	B2C9W8V	5.25	0	A	0	45	45	1	1	2.0	1.0	-	
195	B2C9W8V	2.62	0	A	0	45	45	1	1	4.0	2.0	-	
196	B2C9W8V	21	5	A	0	45	45	1	1	0.5	0.25	-	
197	B2C9W8V	10.5	5	A	0	45	45	1	1	1.0	0.5	-	
198	B2C9W8V	5.25	5	A	0	45	45	1	1	2.0	1.0	-	
199	B2C9W8V	1.31	0	A	0	45	45	1	1	8.0	4.0	-	
200	B2C9W8V	21	A	0	0	45	45	1	1	0.5	0.25	-	
201	B2C9W8V	21	A	8	0	45	45	1	1	0.5	0.25	-	
202	B2C9W8V	10.5	A	8	0	45	45	1	1	1.0	0.5	-	
203	B2C9W8V	10.5	A	0	0	45	45	1	1	1.0	0.5	-	
204	B2C9W8V	5.25	A	0	0	45	45	1	1	2.0	1.0	-	
205	B2C9W8V	5.25	A	8	0	45	45	1	1	2.0	1.0	-	
206	B2C9W8	30	5	A	0	45	45	1	1	0	0	-	
207	B2C9W8	21	5	A	0	45	45	1	1	0.5	0.25	-	
208	B2C9E8	10.5	5	A	0	45	45	1	1	1.0	0.5	-	
209	B2C9W8	5.25	5	A	0	45	45	1	1	2.0	1.0	-	
210	B2C9W8	30	0	A	0	45	45	1	1	0	0	-	
211	B2C9W8	21	0	A	0	45	45	1	1	0.5	0.25	-	
212	B2C9W8	10.5	0	A	0	45	45	1	1	1.0	0.5	-	
213	B2C9W8	5.25	0	A	0	45	45	1	1	2.0	1.0	-	
214	B2C9W8V	30	0	A	0	45	45	1	1	0	0	-	
215	B2C9W8V	THRUST CALIBRATION											
216	B2C9W8V	30	0	A	10	45	45	1	1	0	0	-	

TABLE 1 PROPULSIVE WING TEST RUN SCHEDULE (Cont'd)

RUN #	CONFIG	Q	BETA	ALPHA	DELC	DELF	DELW	BW/BC	BW/BC	CMUW	CMUC	H/C	REMARKS
217	B2C9W8V	21	0	A	10	45	45	1	1	0.5	0.25	-	
218	B2C9W8V	10.5	0	A	10	45	45	1	1	1.0	0.5	-	
219	B2C9W8V	5.25	0	A	10	45	45	1	1	2.0	1.0	-	
220	B2C9V	THRUST CALIBRATION											
221	B2C9V	30	0	A	0	45	-	-	1	-	0	-	
222	B2C9V	21	0	A	0	45	-	-	1	-	0.25	-	
223	B2C9V	10.5	0	A	0	45	-	-	1	-	0.5	-	
224	B2C9V	5.25	0	A	0	45	-	-	1	-	1.0	-	
225	B2C9V	2.62	0	A	0	45	-	-	1	-	2.0	-	
226	B2C9V	1.31	0	A	0	45	-	-	1	-	4.0	-	
227	B2C9W8V	WT. TARE											
228	B2C9W8V	NOZZLE CALIBRATION											
229	B2C9W8V	WT.TARE											
230	B2C9W8V	30	0	A	0	45	30	1	1	0	0	-	
231	B2C9W8V	21	0	A	0	45	30	1	1	0.5	0.25	-	
232	B2C9W8V	10.5	0	A	0	45	30	1	1	1.0	0.5	-	
233	B2C9W8V	5.25	0	A	0	45	30	1	1	1.0	2.0	-	
234	B2W8V	NOZZLE CALIBRATION											
235	B2W8V	30	0	A	-	-	30	1	-	0	-	-	
236	B2W8V	21	0	A	-	-	30	1	-	0.5	-	-	
237	B2W8V	10.5	0	A	-	-	30	1	-	1.0	-	-	
238	B2W8V	5.25	0	A	-	-	30	1	-	2.0	-	-	
239	B2W8V	2.62	0	A	-	-	30	1	-	4.0	-	-	
240	B2W8V	1.31	0	A	-	-	30	1	-	8.0	-	-	
241	B2C9W8V	WT. TARE & NOZZLE CALIBRATION											
242	B2C9W8V	THRUST CALIBRATION											
243	B2C9W8V	30	0	A	0	30	30	1	1	0	0	-	
244	B2C9W8V	21	0	A	0	30	30	1	1	0.5	0.25	-	
245	B2C9W8V	10.5	0	A	0	30	30	1	1	1.0	0.5	-	
246	B2C9W8V	5.25	0	A	0	30	30	1	1	2.0	1.0	-	
247	B2C9W8V	2.62	0	A	0	30	30	1	1	4.0	2.0	-	
248	B2C9W8V	1.31	0	A	0	30	30	1	1	8.0	4.0	-	
249	B2C9V	WT TARE & NOZZLE CALIBRATION											
250	B2C9V	30	0	A	0	30	-	-	1	-	0	-	
251	B2C9V	21	0	A	0	30	-	-	1	-	0.25	-	
252	B2C9V	10.5	0	A	0	30	-	-	1	-	0.5	-	
253	B2C9V	5.25	0	A	0	30	-	-	1	-	1.0	-	
254	B2W8V	NOZZLE CALIBRATION											
255	B2W8V	WT. TARE & THRUST CALIBRATION											
256	B2W8V	30	0	A	-	-	15	1	-	0	-	-	
257	B2W8V	21	0	A	-	-	15	1	-	0.5	-	-	
258	B2W8V	10.5	0	A	-	-	15	1	-	1.0	-	-	
259	B2W8V	5.25	0	A	-	-	15	1	-	2.0	-	-	
260	B2C9W8V	NOZZLE CALIBRATION											
261	B2C9W8V	WT.TARE											
262	B2C9W8V	30	0	A	0	15	15	1	1	0	0	-	
263	B2C9W8V	21	0	A	0	15	15	1	1	0.5	0.25	-	
264	B2C9W8V	10.5	0	A	0	15	15	1	1	1.0	0.5	-	
265	B2C9W8V	5.25	0	A		15	15	1	1	2.0	1.0	-	
266	B2C9V	WT. TARE & THRUST CALIBRATION											
267	B2C9V	30	0	A	0	15	-	-	1	-	0	-	
268	B2C9V	21	0	A	0	15	-	-	1	-	0.25	-	
269	B2C9V	10.5	0	A	0	15	-	-	1	-	0.5	-	
270	B2C9V	5.25	0	A	0	15	-	-	1	-	1.0	-	
271	B2W8V	WT. TARE & NOZZLE CALIBRATION											
272	B2W8V	THRUST CALIBRATION											
273	B2W8V	30	0	D	-	-	45	1/4	-	0	-	-	

TABLE 1 PROPULSIVE WING TEST RUN SCHEDULE (Cont'd)

RUN #	CONFIG	Q	BETA	ALPHA	DELC	DELFC	DELFW	BW/BW	BW/BC	CMUW	CMUC	E/C	REMARKS
274	B2W8V	10	0	D	-	-	45	1/4	-	0.5	-	-	
275	B2W8V	5	0	D	-	-	45	1/4	-	1.0	-	-	
276	B2W8V	2.5	0	D	-	-	45	1/4	-	2.0	-	-	
277	B2W8V	2.5	5	D	-	-	45	1/4	-	2 0	-	-	
278	B2W8V	5	5	D	-	-	45	1/4	-	1.0	-	-	
279	B2W8V	10	5	D	-	-	45	1/4	-	0.5	-	-	
280	B2W8V	30	5	D	-	-	45	1/4	-	0	-	-	
281	B2W8V	30	0	D	-	-	45	1/	-	0	-	-	
282	B2W8V	10	0	D	-	-	45	1/4	-	0.5	-	-	
283	B2W8V	10	5	D	-	-	45	1/4	-	0.5	-	-	
284	B2W8V	5	5	D	-	-	45	1/4	-	1.0	-	-	
285	B2W8V	5	0	D	-	-	45	1/4	-	1.0	-	-	
286	B2W8V	2.5	0	D	-	-	45	1/4	-	2.0	-	-	
287	B2W8V	2.5	5	D	-	-	45	1/4	-	2.0	-	-	
288	B2W8V	30	5	D	-	-	45	1/4	-	0	-	-	
289	B2W8	NOZZLE CALIBRATION											
290	B2W8	THRUST CALIBRATION											
291	B2W8	30	5	D	-	-	45	1/2	-	0	-	-	
292	B2W8	30	0	D	-	-	45	1/2	-	0	-	-	
293	B2W8	12	0	D	-	-	45	1/2	-	0.5	-	-	
294	B2W8	6	0	D	-	-	45	1/2	-	1.0	-	-	
295	B2W8	3	0	D	-	-	45	1/2	-	2.0	-	-	
296	B2W8	3	5	D	-	-	45	1/2	-	2.0	-	-	
297	B2W8	6	5	D	-	-	45	1/2	-	1.0	-	-	
298	B2W8	12	5	D	-	-	45	1/2	-	0.5	-	-	
299	B2W8V	30	0	D	-	-	45	1/2	-	0	-	-	
300	B2W8V	30	5	D	-	-	45	1/2	-	0	-	-	
301	B2W8V	12	5	D	-	-	45	1/2	-	0.5	-	-	
302	B2W8V	6	5	D	-	-	45	1/2	-	1.0	-	-	
303	B2W8V	3	5	D	-	-	45	1/2	-	2.0	-	-	
304	B2W8V	1.5	0	D	-	-	45	1/2	-	4.0	-	-	
305	B2W8V	3	0	D	-	-	45	1/2	-	2.0	-	-	
306	B2W8V	6	0	D	-	-	45	1/2	-	1.0	-	-	
307	B2W8V	12	0	D	-	-	45	1/2	-	0.5	-	-	
308	B2C9W8V	WT. TARE & NOZZLE CALIBRATION											
309	B2C9W8V	THRUST CALIBRATION											
310	B2C9W8V	30	0	D	45	0	45	1/2	1	0	0	-	
311	B2C9W8V	30	5	D	45	0	45	1/2	1	0	0	-	
312	B2C9W8V	12	5	D	45	0	45	1/2	1	0.5	0.25	-	
313	B2C9W8V	6	5	D	45	0	45	1/2	1	1.0	0.5	-	
314	B2C9W8V	3	5	D	45	0	45	1/2	1	2.0	1.0	-	
315	B2C9W8V	1.5	5	D	45	0	45	1/2	1	4.0	2.0	-	
316	B2C9W8V	3	0	D	45	0	45	1/2	1	2.0	1.0	-	
317	B2C9W8V	6	0	D	45	0	45	1/2	1	1.0	0.5	-	
318	B2C9W8V	12	0	D	45	0	45	1/2	1	0.5	0.25	-	
319	B2W8V	GROUND BELT CALIBRATION											
320	B2W8V	12	0	0	-	-	45	1/2	-	0	-	A	NOTE 1
321	B2W8V	12	5	8	-	-	45	1/2	-	0	-	A	NOTE 1
322	B2W8V	12	0	0	-	-	45	1/2	-	0.5	-	A	NOTE 1
323	B2W8V	12	5	8	-	-	45	1/2	-	0.5	-	A	NOTE 1
324	B2W8V	6	5	8	-	-	45	1/2	-	1.0	-	A	NOTE 1
325	B2W8V	6	0	0	-	-	45	1/2	-	1.0	-	A	NOTE 1
326	B2W8V	6	0	0	-	-	45	1/2	-	1.0	-	A	NOTE 2
327	B2W8V	3	0	0	-	-	45	1/2	-	2.0	-	A	NOTE 2
328	B2W8V	3	5	8	-	-	45	1/2	-	2.0	-	A	NOTE 2
329	B2W8V	6	5	8	-	-	45	1/2	-	1.0	-	A	NOTE 2
330	B2W8V	12	5	8	-	-	45	1/2	-	0.5	-	A	NOTE 2

TABLE 1 PROPULSIVE WING TEST RUN SCHEDULE (Cont'd)

RUN #	CONFIG	Q	BETA	ALPHA	DELC	DELFC	DELFW	BW/BW	BW/BC	CMUW	CMUC	H/C	REMARKS
331	B2W8V	12	0	0	-	-	45	1/2	-	0.5	-	A	NOTE 2
332	B2W8V	12	0	0	-	-	45	1/2	-	0	-	A	NOTE 2
333	B2W8V	12	5	8	-	-	45	1/2	-	0	-	A	NOTE 2
334	B2W8V	3	0	0	-	-	45	1/2	-	2.0	-	A	NOTE 1
335	B2W8V	NOZZLE CALIBRATION											
336	B2W8V	WEIGHT TARE & THRUST CALIBRATION											
337	B2W8V	30	0	0	-	-	45	1	-	0	-	A	NOTE 3
338	B2W8V	21	0	0	-	-	45	1	-	0.5	-	A	NOTE 3
339	B2W8V	10.5	0	0	-	-	45	1	-	1.0	-	A	NOTE 3
340	B2W8V	5.25	0	0	-	-	45	1	-	2.0	-	A	NOTE 3
341	B2W8V	2.62	0	0	-	-	45	1	-	4.0	-	A	NOTE 3
342	B2W8V	1.31	0	0	-	-	45	1	-	8.0	-	A	NOTE 4
343	B2W8V	1.31	0	8	-	-	45	1	-	8.0	-	A	NOTE 4
344	B2W8V	2.62	0	8	-	-	45	1	-	4.0	-	A	NOTE 4
345	B2W8V	2.62	0	0	-	-	45	1	-	4.0	-	A	NOTE 4
346	B2W8V	5.25	0	0	-	-	45	1	-	2.0	-	A	NOTE 4
347	B2W8V	5.25	0	8	-	-	45	1	-	2.0	-	A	NOTE 4
348	B2W8V	5.25	5	8	-	-	45	1	-	2.0	-	A	NOTE 4
349	B2W8V	5.25	5	0	-	-	45	1	-	2.0	-	A	NOTE 4
350	B2W8V	10.5	5	0	-	-	45	1	-	1.0	-	A	NOTE 4
351	B2W8V	10.5	5	8	-	-	45	1	-	1.0	-	A	NOTE 4
352	B2W8V	10.5	0	8	-	-	45	1	-	1.0	-	A	NOTE 4
353	B2W8V	10.5	0	0	-	-	45	1	-	1.0	-	A	NOTE 4
354	B2W8V	21	0	0	-	-	45	1	-	0.5	-	A	NOTE 4
355	B2W8V	21	0	8	-	-	45	1	-	0.5	-	A	NOTE 4
356	B2W8V	21	5	8	-	-	45	1	-	0.5	-	A	NOTE 4
357	B2W8V	21	5	0	-	-	45	1	-	0.5	-	A	NOTE 4
358	B2W8V	30	5	0	-	-	45	1	-	0	-	A	NOTE 4
359	B2W8V	30	5	8	-	-	45	1	-	0	-	A	NOTE 4
360	B2W8V	30	0	8	-	-	45	1	-	0	-	A	NOTE 4
361	B2W8V	30	0	0	-	-	45	1	-	0	-	A	NOTE 4
362	B2W8V	30	0	E	-	-	45	1	-	0	-	-	REPEAT OF RUN 163
363	B2W8V	16.6	0	E	-	-	45	1	-	0.5	-	-	REPEAT OF RUN 170
364	B2W8V	10.5	0	E	-	-	45	1	-	1.0	-	-	REPEAT OF RUN 171
365	B2W8V	5.25	0	E	-	-	45	1	-	2.0	-	-	REPEAT OF RUN 178
366	B2W8V	1.31	0	E	-	-	45	1	-	8.0	-	-	REPEAT OF RUN 180
367	B2W8V	2.62	0	E	-	-	45	1	-	4.0	-	-	REPEAT OF RUN 179
368		THRUST CALIBRATION											
369	B2C9W8V	30	0	E	0	45	45	1	1	0	0	-	REPEAT OF RUN 184
370	B2C9W8V	21	0	E	0	45	45	1	1	0.5	0.25	-	REPEAT OF RUN 192
371	B2C9W8V	10.5	0	E	0	45	45	1	1	1.0	0.5	-	REPEAT OF RUN 193
372	B2C9W8V	5.25	0	E	0	45	45	1	1	2.0	1.0	-	REPEAT OF RUN 194
373	B2C9W8V	2.62	0	E	0	45	45	1	1	4.0	2.0	-	REPEAT OF RUN 195
374	B2C9W8V	1.31	0	E	0	45	45	1	1	8.0	4.0	-	REPEAT OF RUN 199
375	B2C9W8V	30	0	0	0	45	45	1	1	0	0	A	NOTE 4
379	B2C9W8V	2.62	0	0	0	45	45	1	1	4.0	2.0	A	NOTE 4
380	B2C9W8V	1.31	0	0	0	45	45	1	1	8.0	4.0	A	NOTE 4
381	B2C9W8V	5.25	0	0	0	45	45	1	1	2.0	1.0	A	NOTE 4
382	B2C9W8V	10.5	0	0	0	45	45	1	1	1.0	0.5	A	NOTE 4
383	B2C9W8V	21	0	0	0	45	45	1	1	0.5	0.25	A	NOTE 4
387	B2C9W8V	21	0	B	0	45	45	1	1	0/.5	0.25	-	LATERAL
388	B2C9W8V	10.5	0	B	0	45	45	1	1	0/1	0.5	-	CONTROL
289	B2C9W8V	5.25	0	B	0	45	45	1	1	0/2	1.0	-	NOTE 5
390	B2C9V	THRUST CALIBRATION											
391	B2C9V	21	0	0	0	45	-	-	1	-	0	-	RAKE LOC. 1, NOTE 7
392	B2C9V	10.5	0	0	0	45	-	-	1	-	0.5	-	RAKE LOC. 1, NOTE 7
393	B2C9V	5.25	0	0	0	45	-	-	1	-	1.0	-	RAKE LOC. 1, NOTE 7

TABLE 1 PROPULSIVE WING TEST RUN SCHEDULE (Cont'd)

RUN #	CONFIG	Q	BETA	ALPHA	DELF	DELFC	DELFW	BW/BW	BW/BC	CMU W	CMU C	H/C	REMARKS
394	B2C9V	21	0	0	0	45	-	-	1	-	0	-	RAKE LOC. 2, NOTE 7
395	B2C9V	21	0	0	0	45	-	-	1	-	0	-	REPEAT OF RUN 394
396	B2C9V	10.5	0	0	0	45	-	-	1	-	0.5	-	RAKE LOC. 2, NOTE 7
397	B2C9V	5.25	0	0	0	45	-	-	1	-	1.0	-	RAKE LOC. 2, NOTE 7
398	B2C9V	BALANCE CHECK											
399	B2C9V	21	0	0	0	45	-	-	1	-	0	-	RAKE LOC. 3, NOTE 7
400	B2C9V	10.5	0	0	0	45	-	-	1	-	0.5	-	RAKE LOC. 3, NOTE 7
401	B2C9V	5.25	0	0	0	45	-	-	1	-	1.0	-	RAKE LOC. 3, NOTE 7
402	B2C9V	21	0	0	0	45	-	-	1	-	0	-	RAKE LOC. 4, NOTE 7
403	B2C9V	10.5	0	0	0	45	-	-	1	-	0.5	-	RAKE LOC. 4, NOTE 7
404	B2C9V	5.25	0	0	0	45	-	-	1	-	1.0	-	RAKE LOC. 4, NOTE 7
405	B2C9V	V	0	0	0	45	-	-	1	-	0	-	NOTE 6
406	B2C9V	DISCARDED											
407	B2C9V	NOZZLE CALIBRATION											
408	B2C9V	DISCARDED											
409	B2C9V	21	0	0	0	0	-	-	1	-	0	-	RAKE LOC. 6, NOTE 7
410	B2C9V	THRUST CALIBRATION											
411	B2C9V	10.5	0	0	0	0	-	-	1	-	0.5	-	RAKE LOC. 6, NOTE 7
412	B2C9V	5.25	0	0	0	0	-	-	1	-	1.0	-	RAKE LOC. 6, NOTE 7
413	B2C9V	V	0	0	0	0	-	-	1	-	0	-	RAKE LOC. 6, NOTE 7
415	B2C9V	V	0	0	0	0	-	-	1	-	0	-	RAKE LOC. 8, NOTE 7
416	B2C9V	21	0	0	0	0	-	-	1	-	0	-	RAKE LOC. 8, NOTE 7
417	B2C9V	10.5	0	0	0	0	-	-	1	-	0.5	-	RAKE LOC. 8, NOTE 7
418	B2C9V	5.25	0	0	0	0	-	-	1	-	1.0	-	RAKE LOC. 8, NOTE 7
419	B2C9V	V	0	0	0	0	-	-	1	-	0	-	RAKE LOC. 7, NOTE 7
420	B2C9V	21	0	0	0	0	-	-	1	-	0	-	RAKE LOC. 7, NOTE 7
421	B2C9V	10.5	0	0	0	0	-	-	1	-	0.5	-	RAKE LOC. 7, NOTE 7
422	B2C9V	5.25	0	0	0	0	-	-	1	-	1.0	-	RAKE LOC. 7, NOTE 7
423	B2C9V	V	0	0	0	0	-	-	1	-	0	-	RAKE LOC. 5, NOTE 7
424	B2C9V	21	0	0	0	0	-	-	1	-	0	-	RAKE LOC. 5, NOTE 7
425	B2C9V	10.5	0	0	0	0	-	-	1	-	0.5	-	RAKE LOC. 5, NOTE 7
426	B2C9V	5.25	0	0	0	0	-	-	1	-	1.0	-	RAKE LOC. 5, NOTE 7
427	B2C9V	V	0	0	0	0	-	-	1	-	0	-	RAKE LOC. 9, NOTE 7
428	B2C9V	21	0	0	0	0	-	-	1	-	0	-	RAKE LOC. 9, NOTE 7
429	B2C9V	10.5	0	0	0	0	-	-	1	-	0.5	-	RAKE LOC. 9, NOTE 7
430	B2C9V	5.25	0	0	0	0	-	-	1	-	1.0	-	RAKE LOC. 9, NOTE 7
431	B2C9V	V	0	0	0	0	-	-	1	-	0	-	RAKE LOC. 10, NOTE 7
432	B2C9V	21	0	0	0	0	-	-	1		0	-	RAKE LOC. 10, NOTE 7
433	B2C9V	10.5	0	0	0	0	-	-	1		0.5		RAKE LOC. 10, NOTE 7
434	B2C9V	5.25	0	0	0	0	-	-	1		1.0		RAKE LOC. 10, NOTE 7
435	B2C9V	BALANCE CHECK PITCH											
436	B2C9V	BALANCE CHECK YAW											

NOTES:

1. GROUND BELT VELOCITY IS EQUAL TO FREE STREAM VELOCITY BOUNDARY LAYER SUCTION IS ON
2. GROUND BELT VELOCITY IS ZERO BOUNDARY LAYER SUCTION IS ON
3. GROUND BELT VELOCITY IS ZERO BOUNDARY LAYER SUCTION IS OFF
4. GROUND BELT VELOCITY IS ZERO BOUNDARY LAYER SUCTION IS ON
5. RIGHT HAND WING BLOWING COEFFICIENT IS ZERO
6. MODEL LOWERED FOR RAKE ZERO. USE AS RAKE CALIBRATION ANGLES FOR CLEAN TUNNEL. RUNS 405, 413, 415, 419, 420, 427, AND 431
7. REFER TO TABLE 3 FOR SPECIFIC RAKE LOCATIONS

TABLE 2 RANGE OF VARIABLES FOR RUN SCHEDULE

- ALPHA RANGES

A	-2, 0, 2, 4, 6, 8, 10, 12, 14, 16, 18, 20, 22
B	0, 4, 12

- BETA RANGE

A	-15, -10, -6, -4, -2, 0, 2, 4, 6, 8, 10, 15

- H/C RANGE

A	0.5, 1.0, 2.0, FREE AIR

- Q RANGE

V	5.25, 10.5, 21

TABLE 3 SURVEY RAKE LOCATIONS

SURVEY RAKE LOCATION	HP INCHES	XO INCHES	Y INCHES
1	66	19	3
2	66	19	19
3	66.6	51	19
4	66.6	51	5
5	67.1	19	3
6	66.6	51	5
7	66	19	17
8	65.5	51	19
9	67	11	3
10	66.5	11	17

a. X = XO + (Hmodel + 3 - HP) sin 7.25 deg.

b. Probes are 2 inches apart. Seven probes on the rake.

c. Z = Hmodel + 3 - HP positive when probe is below model

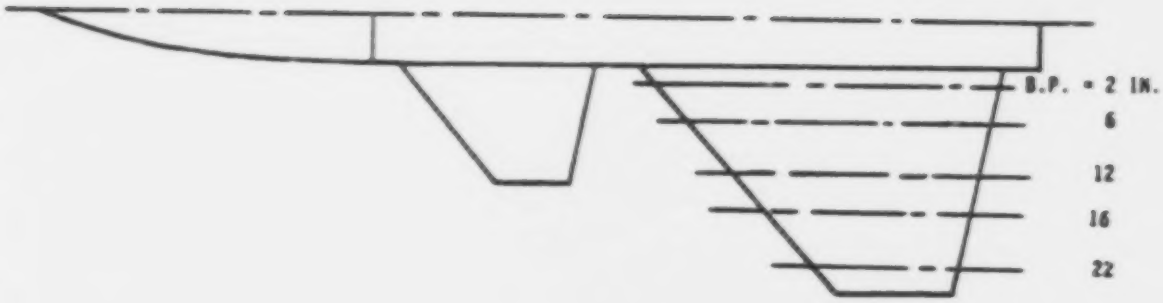

WING STATIC PRESSURE TAP LOCATIONS										
	Y_w (Distance to Root Chord)									
%	2		6		12		16		22	
Chord	Up	Lwr	Up	Lwr	Up	Lwr	Up	Lwr	Up	Lwr
0	L.E.		L.E.		L.E.		L.E.		L.E.	
2.5	X	X	X	X	X	X	X	X	X	X
5	X	X	X	X	X	X	X	X	X	X
10	X	X	X	X	X	X	X	X	X	X
1[illegible]	X		X		X		X		X	
24	X	X	X	X	X	X	X	X	X	X
33	X	X	X	X	X	X	X	X	X	X
54	X	X	X	X	X	X	X	X	X	X
66	X		X		X		X		X	
73.5		X		X		X		X		X
78.5	X		X		X		X		X	
79.5	X		X		X		X		X	
80.5	X		X		X		X		X	
81.25	X		X		X		X		X	
82	X		X		X		X		X	
84	X	X	X	X	X	X	X	X	X	X
87	X		X		X		X		X	
89	X		X		X		X		X	
93	X				X		X		X	
96	X	X		X	X	X	X	X	X	X
100	T.E.		T.E.		T.E		T.E		T.E	

Figure 1 Wing Surface Pressure Tap Locations

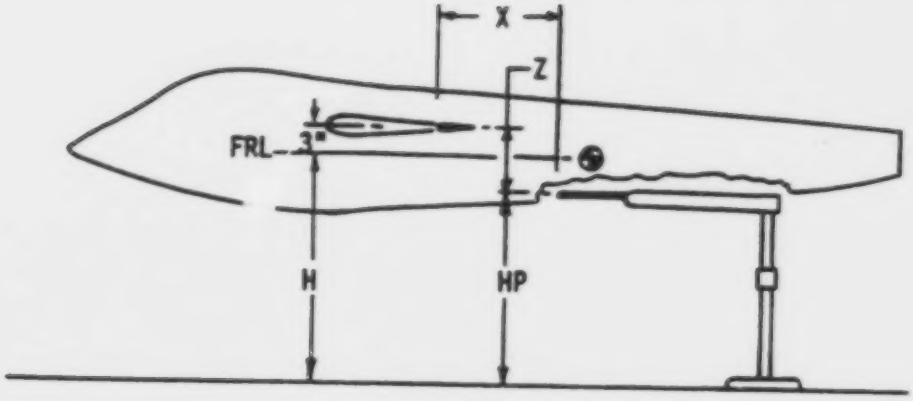

$X = X_o + (H-HP+3) \sin 7.25$

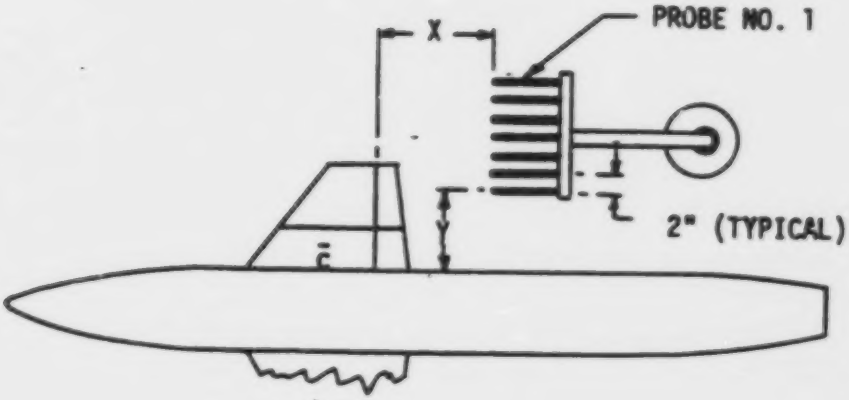

Figure 2 Location of Flow Field Survey Rake with Respect to Model

ORIGINAL PAGE IS
OF POOR QUALITY

Figure 3 Profile View of Model with Survey Rake in Vertical Position Aft of Trailing Edge of Wing Flap

ORIGINAL PAGE IS
OF POOR QUALITY

Figure 4 Nose-On View of Model with Survey Rake in Horizontal Position Aft of Trailing Edge of Canard Flap

APPENDIX A

TABULATED FORCE DATA

PROPULSIVE WING FORCE DATA

SUMMARY, RUN 100

PT	Q ALPHA BETA	REY NO HEIGHT	CL15 CAF10 CNWC	CD15 CAF10 CNWH	CPM15 CPM10 CNWT	CNM15 CNM10 CLTR	CYM15 CYM10 CDTR	CSF15 CSF10 CNTR
2	2.93		-0.10	0.00	-0.07	0.00	0.00	0.02
	-4.57	0.20E+06	-0.17	0.01	-0.07	0.00	0.00	0.02
	0.00	82.38	0.00	0.00	0.00	-0.22	0.75	0.04
3	2.78		0.08	0.02	-0.04	0.00	0.00	0.03
	-2.90	0.30E+06	0.08	0.02	-0.04	0.00	0.00	0.03
	0.00	88.57	0.00	0.00	0.00	-0.02	0.68	0.06
4	2.78		0.14	0.00	-0.03	0.00	0.00	-0.02
	-0.28	0.30E+06	0.14	0.00	-0.03	0.00	0.00	-0.02
	0.00	97.38	0.00	0.00	0.00	0.04	0.07	0.07
5	2.78		0.31	0.01	-0.01	0.00	0.00	-0.03
	1.98	0.30E+06	0.31	0.00	-0.01	0.00	0.00	-0.03
	0.00	88.80	0.00	0.00	0.00	0.10	0.07	0.00
6	2.78		0.38	0.02	-0.03	0.00	-0.01	-0.04
	3.58	0.30E+06	0.38	-0.01	-0.03	0.00	-0.01	-0.04
	0.00	87.21	0.00	0.00	0.00	0.23	0.07	0.07
7	2.85		0.50	0.05	0.04	0.00	0.00	-0.08
	5.55	0.30E+06	0.50	-0.01	0.04	0.00	0.00	-0.08
	0.00	88.35	0.00	0.00	0.00	0.42	0.73	0.15
8	2.85		0.73	0.07	0.07	0.00	-0.01	-0.08
	7.51	0.30E+06	0.74	-0.02	0.07	0.00	-0.01	-0.08
	0.00	84.57	0.00	0.00	0.00	0.54	0.75	0.17
9	2.85		0.95	0.11	0.14	0.00	-0.01	-0.08
	9.48	0.30E+06	0.95	-0.04	0.14	0.00	-0.01	-0.08
	0.00	84.55	0.00	0.00	0.00	0.73	0.78	0.25
10	2.78		0.98	0.14	0.10	0.00	-0.01	-0.10
	11.50	0.30E+06	1.00	-0.06	0.10	0.00	-0.01	-0.10
	0.00	88.83	0.00	0.00	0.00	0.78	0.77	0.20
11	2.85		1.18	0.21	0.13	0.00	-0.01	-0.10
	13.47	0.30E+06	1.20	-0.07	0.13	0.00	-0.01	-0.10
	0.00	84.30	0.00	0.00	0.00	0.92	0.88	0.23
12	2.85		1.38	0.31	0.15	0.00	-0.01	-0.08
	15.44	0.30E+06	1.42	-0.07	0.15	0.00	-0.01	-0.08
	0.00	85.45	0.00	0.00	0.00	1.10	0.95	0.28
13	2.85		1.45	0.37	0.12	0.00	-0.01	-0.08
	17.47	0.30E+06	1.50	-0.08	0.12	0.00	-0.01	-0.08
	0.00	86.03	0.00	0.00	0.00	1.14	1.00	0.23
14	2.85		1.25	-0.22	0.14	0.00	-0.01	-0.15
	19.39	0.30E+06	1.07	-0.02	0.14	0.00	-0.01	-0.15
	0.00	93.12	0.00	0.00	0.00	1.52	0.46	0.24
15	2.78		0.24	-0.01	0.01	0.00	-0.01	0.00
	-0.46	0.30E+06	0.24	-0.01	0.01	0.00	-0.01	0.00
	0.00	88.88	0.00	0.00	0.00	0.15	0.88	0.11
16	2.78		0.03	0.00	-0.05	0.00	0.00	0.00
	-2.47	0.30E+06	0.03	0.00	-0.05	0.00	0.00	0.00
	0.00	88.00	0.00	0.00	0.00	0.04	0.07	0.05
17	2.78		-0.11	0.00	-0.08	0.00	0.00	0.00
	-4.50	0.30E+06	-0.11	-0.01	-0.08	0.00	0.00	0.00
	0.00	87.48	0.00	0.00	0.00	-0.18	0.07	0.03

PROPULSIVE WING FORCE DATA

SUMMARY, RUN 101

PT	Q ALPHA BETA	REY NO HEIGHT	CL15 CAF10 CNWC	CD15 CAF10 CNWH	CPM15 CPM10 CNWT	CNM15 CNM10 CLTR	CYM15 CYM10 CDTR	CSF15 CSF10 CNTR
1	5.20		-0.12	0.01	-0.07	0.00	0.00	0.00
	-4.51	0.42E+06	-0.12	0.00	-0.07	0.00	0.00	0.00
	0.00	82.48	0.00	0.00	0.00	-0.14	0.36	-0.02
2	5.20		0.03	0.00	-0.05	0.00	0.00	0.00
	-2.48	0.42E+06	0.03	0.00	-0.05	0.00	0.00	0.00
	0.00	80.83	0.00	0.00	0.00	0.00	0.35	0.00
3	5.20		0.13	-0.01	-0.03	0.00	0.00	0.00
	-0.43	0.42E+06	0.13	0.00	-0.03	0.00	0.00	0.00
	0.00	97.38	0.00	0.00	0.00	0.00	0.37	0.02
4	5.20		0.20	0.01	0.00	0.00	0.00	0.00
	1.53	0.42E+06	0.20	0.00	0.00	0.00	0.00	0.00
	0.00	84.41	0.00	0.00	0.00	0.23	0.35	0.05
5	5.17		0.37	0.01	0.01	0.00	-0.01	-0.02
	3.58	0.42E+06	0.37	-0.01	0.01	0.00	-0.01	-0.02
	0.00	83.73	0.00	0.00	0.00	0.30	0.38	0.06
6	5.20		0.55	0.03	0.03	0.00	0.00	-0.03
	5.50	0.42E+06	0.55	-0.02	0.03	0.00	0.00	-0.03
	0.00	85.82	0.00	0.00	0.00	0.48	0.37	0.06
7	5.17		0.85	0.05	0.06	0.00	-0.01	-0.03
	7.51	0.42E+06	0.85	-0.03	0.06	0.00	-0.01	-0.03
	0.00	85.06	0.00	0.00	0.00	0.55	0.40	0.11
8	5.17		0.80	0.08	0.08	0.00	-0.01	-0.02
	9.54	0.42E+06	0.81	-0.05	0.08	0.00	-0.01	-0.02
	0.00	86.38	0.00	0.00	0.00	0.00	0.43	0.14
9	5.17		0.94	0.13	0.10	0.00	-0.01	-0.05
	11.48	0.42E+06	0.95	-0.06	0.10	0.00	-0.01	-0.05
	0.00	87.46	0.00	0.00	0.00	0.82	0.47	0.15
10	5.17		1.08	0.18	0.10	0.00	-0.01	-0.04
	13.45	0.42E+06	1.11	-0.07	0.10	0.00	-0.01	-0.04
	0.00	83.74	0.00	0.00	0.00	0.98	0.52	0.18
11	5.17		1.24	0.28	0.13	0.00	-0.01	-0.08
	15.47	0.42E+06	1.28	-0.08	0.13	0.00	-0.01	-0.08
	0.00	85.92	0.00	0.00	0.00	1.08	0.58	0.19
12	5.08		1.38	0.34	0.10	0.00	-0.01	-0.07
	17.40	0.41E+06	1.43	-0.08	0.10	0.00	-0.01	-0.07
	0.00	85.74	0.00	0.00	0.00	1.20	0.67	0.18
13	5.20		1.46	0.42	0.11	0.00	-0.01	-0.08
	19.40	0.42E+06	1.51	-0.08	0.11	0.00	-0.01	-0.08
	0.00	83.06	0.00	0.00	0.00	1.28	0.73	0.18

PROPULSIVE WING FORCE DATA

SUMMARY, RUN 102

PT	Q ALPHA BETA	RET NO HEIGHT	CL15 CSF10 CNUC	CD15 CAF10 CNUM	CPM15 CPM10 CNUT	CBM15 CBM10 CLTR	CYM15 CYM10 CDTR	CSF15 CSF10 CNTR
1	10.46 -4.49 0.00	0.50E+06 83.00	-0.00 -0.00 0.00	0.01 0.00 0.00	-0.07 -0.07 0.00	0.00 0.00 -0.10	0.00 0.00 0.10	0.00 0.00 -0.04
2	10.46 -2.45 0.00	0.50E+06 88.03	0.04 0.04 0.00	0.00 0.01 0.00	-0.05 -0.05 0.00	0.00 0.00 0.00	0.00 0.00 0.10	0.01 0.01 -0.02
3	10.50 -0.41 0.00	0.00E+00 86.30	0.17 0.17 0.00	0.00 0.00 0.00	-0.03 -0.03 0.00	0.00 0.00 0.14	0.00 0.00 0.17	0.01 0.01 0.00
4	10.50 1.57 0.00	0.00E+00 85.00	0.25 0.25 0.00	0.01 0.00 0.00	-0.02 -0.02 0.00	0.00 0.00 0.23	0.00 0.00 0.18	0.00 0.00 0.01
5	10.46 3.55 0.00	0.50E+06 84.50	0.30 0.30 0.00	0.02 -0.01 0.00	0.01 0.01 0.00	0.00 0.00 0.30	0.00 0.00 0.10	0.00 0.00 0.03
6	10.50 5.54 0.00	0.00E+00 85.00	0.50 0.50 0.00	0.03 -0.02 0.00	0.03 0.03 0.00	0.00 0.00 0.45	0.00 0.00 0.20	-0.01 -0.01 0.05
7	10.46 7.50 0.00	0.50E+06 85.00	0.83 0.83 0.00	0.00 -0.03 0.00	0.05 0.05 0.00	0.00 0.00 0.58	0.00 0.00 0.23	0.00 0.00 0.00
8	10.50 9.52 0.00	0.00E+00 83.01	0.70 0.77 0.00	0.00 -0.04 0.00	0.05 0.05 0.00	0.00 0.00 0.71	0.00 0.00 0.20	0.00 0.00 0.10
9	10.50 11.48 0.00	0.00E+00 88.50	0.00 0.00 0.00	0.13 -0.05 0.00	0.00 0.00 0.00	0.00 0.00 0.83	0.00 0.00 0.20	-0.02 -0.02 0.12
10	10.23 13.46 0.00	0.50E+06 84.23	1.06 1.07 0.00	0.10 -0.05 0.00	0.10 0.10 0.00	0.00 0.00 0.90	0.00 0.00 0.14	-0.01 -0.01 0.13
11	10.50 15.44 0.00	0.00E+00 84.70	1.18 1.20 0.00	0.20 -0.05 0.00	0.10 0.10 0.00	0.00 0.00 1.11	0.00 0.00 0.42	-0.01 -0.01 0.13
12	10.46 17.41 0.00	0.50E+06 88.00	1.27 1.31 0.00	0.33 -0.07 0.00	0.07 0.07 0.00	0.00 0.00 1.20	0.00 0.00 0.48	-0.02 -0.02 0.00
13	10.35 19.41 0.00	0.50E+06 92.70	1.43 1.46 0.00	0.42 -0.07 0.00	0.08 0.08 0.00	0.00 0.00 1.34	-0.01 -0.01 0.58	-0.01 -0.01 0.11

PROPULSIVE WING FORCE DATA

SUMMARY, RUN 103

PT	Q ALPHA BETA	RET NO HEIGHT	CL15 CSF10 CNUC	CD15 CAF10 CNUM	CPM15 CPM10 CNUT	CBM15 CBM10 CLTR	CYM15 CYM10 CDTR	CSF15 CSF10 CNTR
1	10.46 -4.57 0.00	0.50E+06 83.30	0.23 0.33 0.47	-1.22 -1.30 1.00	-0.24 -0.24 1.48	0.00 0.00 0.00	0.00 0.00 -0.04	0.02 0.02 -0.12
2	10.50 -2.50 0.00	0.00E+00 86.50	0.30 0.44 0.45	-1.25 -1.23 0.95	-0.21 -0.21 1.30	0.00 0.00 0.31	0.00 0.00 -0.04	0.01 0.01 -0.10
3	10.50 -0.38 0.00	0.00E+00 85.82	0.57 0.50 0.46	-1.30 -1.27 0.97	-0.18 -0.18 1.43	0.00 0.00 0.34	0.00 0.00 -0.03	0.01 0.01 -0.00
4	10.50 1.54 0.00	0.00E+00 81.70	0.72 0.80 0.46	-1.25 -1.27 0.97	-0.17 -0.17 1.43	0.00 0.00 0.45	0.00 0.00 -0.02	0.00 0.00 -0.00
5	10.46 3.55 0.00	0.50E+06 83.05	0.90 0.83 0.45	-1.23 -1.30 0.97	-0.10 -0.10 1.43	0.00 0.00 0.50	0.00 0.00 0.00	0.00 0.20 -0.04
6	10.50 5.57 0.00	0.00E+00 84.42	1.00 0.95 0.45	-1.17 -1.27 0.90	-0.13 -0.13 1.41	0.00 0.00 0.73	0.00 0.00 0.03	-0.01 -0.01 -0.02
7	10.50 7.50 0.00	0.00E+00 85.50	1.27 1.11 0.45	-1.14 -1.30 0.90	-0.11 -0.11 1.41	0.00 0.00 0.88	0.00 0.00 0.00	-0.02 -0.02 0.00
8	10.50 9.53 0.00	0.00E+00 84.94	1.48 1.30 0.45	-1.07 -1.31 0.90	-0.08 -0.08 1.41	0.00 0.00 1.05	0.00 0.00 0.12	-0.01 -0.01 0.02
9	10.50 11.50 0.00	0.00E+00 85.00	1.71 1.48 0.44	-0.90 -1.30 0.94	-0.06 -0.06 1.38	0.00 0.00 1.24	0.00 0.00 0.18	-0.03 -0.03 0.05
10	10.46 13.45 0.00	0.00E+00 84.02	1.93 1.88 0.45	-0.81 -1.33 0.95	-0.04 -0.04 1.40	0.00 0.00 1.41	0.00 0.00 0.25	-0.02 -0.02 0.07
11	10.50 15.42 0.00	0.00E+00 83.40	2.13 1.83 0.46	-0.82 -1.35 1.00	-0.02 -0.02 1.46	0.00 0.00 1.57	0.00 0.00 0.32	-0.02 -0.02 0.00
12	10.35 17.38 0.00	0.50E+06 86.41	2.35 2.04 0.46	-0.88 -1.35 0.99	0.01 0.01 1.45	0.01 0.00 1.78	0.00 0.00 0.41	-0.04 -0.04 0.12
13	10.46 19.43 0.00	0.00E+00 92.30	2.50 2.35 0.44	-0.55 -1.30 0.95	0.04 0.04 1.39	0.01 0.01 1.90	0.00 0.00 0.54	-0.03 -0.03 0.15

PROPULSIVE WING FORCE DATA

SUMMARY, RUN 104

PT	Q ALPHA BETA	REY NO HEIGHT	CL1S CSF1S CNUC	CD1S CAF1S CNUM	CPM1S CPM1S CMUT	CNM1S CNM1S CLTR	CYM1S CYM1S CDTR	CSF1S CSF1S CNTR
1	5.29		0.27	-2.48	-0.30	0.00	0.60	0.00
	-0.52	0.42E+06	0.48	-2.45	-0.30	0.00	0.00	0.00
	0.00	82.90	0.87	1.87	2.75	0.00	-0.01	-0.14
2	5.29		0.56	-2.47	-0.33	0.00	0.00	-0.01
	-2.43	0.42E+06	0.87	-2.44	-0.33	0.00	0.00	-0.01
	0.00	80.02	0.87	1.87	2.75	0.21	-0.01	-0.11
3	5.29		0.78	-2.46	-0.31	0.00	0.00	-0.04
	-0.44	0.42E+06	0.00	-2.45	-0.31	0.00	0.00	-0.04
	0.00	88.57	0.87	1.88	2.76	0.33	0.01	-0.00
4	5.40		0.97	-2.37	-0.29	0.00	-0.01	-0.05
	1.50	0.43E+06	0.90	-2.40	-0.29	0.00	-0.01	-0.05
	0.00	88.22	0.88	1.84	2.80	0.45	0.02	-0.07
5	5.29		1.21	-2.30	-0.29	0.00	-0.01	-0.04
	3.58	0.42E+06	1.06	-2.46	-0.29	0.00	-0.01	-0.04
	0.00	86.01	0.87	1.88	2.75	0.80	0.04	-0.07
6	5.29		1.47	-2.34	-0.24	0.00	0.00	-0.05
	5.52	0.42E+06	1.24	-2.40	-0.24	0.00	0.00	-0.05
	0.00	84.41	0.88	1.88	2.77	0.77	0.07	-0.07
7	5.29		1.71	-2.28	-0.21	0.00	-0.01	-0.07
	7.55	0.42E+06	1.30	-2.40	-0.21	0.00	-0.01	-0.07
	0.00	84.41	0.88	1.88	2.76	0.93	0.10	0.01
8	5.29		2.02	-2.10	-0.18	0.00	-0.01	-0.06
	9.56	0.42E+06	1.83	-2.40	-0.18	0.00	-0.01	-0.05
	0.00	88.87	0.88	1.88	2.77	1.15	0.17	0.03
9	5.29		2.27	-2.12	-0.18	0.00	-0.01	-0.08
	11.46	0.42E+06	1.00	-2.53	-0.16	0.00	-0.01	-0.08
	0.00	85.90	0.88	1.90	2.76	1.32	0.23	0.06
10	5.29		2.56	-2.01	-0.14	0.00	-0.01	-0.07
	13.53	0.42E+06	2.04	-2.55	-0.14	0.00	-0.01	-0.07
	0.00	88.36	0.88	1.90	2.76	1.55	0.30	0.08
11	5.29		2.84	-1.88	-0.12	0.00	-0.01	-0.09
	15.45	0.42E+06	2.23	-2.57	-0.12	0.00	-0.01	-0.09
	0.00	85.84	0.88	1.90	2.77	1.73	0.39	0.10
12	5.29		3.00	-1.76	-0.10	0.00	-0.01	-0.10
	17.40	0.42E+06	2.42	-2.60	-0.10	0.00	-0.01	-0.10
	0.00	85.50	0.88	1.88	2.77	1.90	0.47	0.13
13	5.17		3.44	-1.63	-0.08	0.00	-0.01	-0.10
	19.37	0.42E+06	2.71	-2.68	-0.08	0.00	-0.01	-0.10
	0.00	92.91	0.90	1.93	2.84	2.15	0.60	0.15

PROPULSIVE WING FORCE DATA

SUMMARY, RUN 105

PT	Q ALPHA BETA	REY NO HEIGHT	CL1S CSF1S CNUC	CD1S CAF1S CNUM	CPM1S CPM1S CMUT	CNM1S CNM1S CLTR	CYM1S CYM1S CDTR	CSF1S CSF1S CNTR
19	29.77		-0.01	0.02	-0.06	0.00	0.00	0.00
	-2.02	0.96E+06	-0.01	0.02	-0.06	0.00	0.00	0.00
	0.00	87.16	0.00	0.00	0.00	-0.02	0.06	-0.06
20	29.80		0.10	0.02	-0.04	0.00	0.00	0.01
	0.00	0.96E+06	0.10	0.02	-0.04	0.00	0.00	0.01
	0.00	94.00	0.00	0.00	0.00	0.00	0.00	-0.03
21	30.12		0.19	0.02	-0.02	0.00	0.00	0.00
	2.00	0.97E+06	0.19	0.01	-0.02	0.00	0.00	0.00
	0.00	88.00	0.00	0.00	0.00	0.18	0.08	-0.01
22	30.23		0.30	0.03	0.00	0.00	0.00	0.00
	4.02	0.97E+06	0.30	0.01	0.00	0.00	0.00	0.00
	0.00	85.06	0.00	0.00	0.00	0.29	0.00	0.01
23	29.77		0.41	0.04	0.02	0.00	0.00	0.00
	5.99	0.96E+06	0.42	0.00	0.02	0.00	0.00	0.00
	0.00	85.37	0.00	0.00	0.00	0.40	0.10	0.03
24	29.77		0.53	0.06	0.04	0.00	0.00	0.00
	8.02	0.96E+06	0.53	-0.01	0.04	0.00	0.00	0.00
	0.00	85.40	0.00	0.00	0.00	0.51	0.12	0.05
25	30.00		0.65	0.00	0.06	0.00	0.00	0.00
	10.00	0.97E+06	0.65	-0.02	0.06	0.00	0.00	0.00
	0.00	85.47	0.00	0.00	0.00	0.63	0.15	0.07
26	30.12		0.78	0.13	0.08	0.00	0.00	0.00
	11.99	0.97E+06	0.78	-0.04	0.08	0.00	0.00	0.00
	0.00	85.34	0.00	0.00	0.00	0.76	0.19	0.09
27	29.88		0.91	0.18	0.08	0.00	0.00	0.00
	14.01	0.97E+06	0.93	-0.04	0.08	0.00	0.00	0.00
	0.00	88.17	0.00	0.00	0.00	0.88	0.24	0.10
28	30.00		1.06	0.25	0.08	0.00	0.00	-0.01
	15.99	0.97E+06	1.08	-0.05	0.08	0.00	0.00	-0.01
	0.00	85.00	0.00	0.00	0.00	1.03	0.30	0.10
29	30.00		1.21	0.34	0.12	0.00	0.00	0.00
	17.99	0.97E+06	1.25	-0.05	0.12	0.00	0.00	0.00
	0.00	88.28	0.00	0.00	0.00	1.18	0.39	0.12
30	30.12		1.36	0.40	0.08	0.00	-0.01	0.00
	20.01	0.97E+06	1.32	-0.06	0.08	0.00	0.00	0.00
	0.00	88.23	0.00	0.00	0.00	1.23	0.45	0.07
31	29.89		1.38	0.49	0.06	0.00	0.00	0.00
	21.97	0.96E+06	1.40	0.06	0.06	0.00	0.00	0.00
	0.00	95.75	0.00	0.00	0.00	1.35	0.54	0.07

PROPULSIVE WING FORCE DATA

SUMMARY RUN 106

PT	Q ALPHA BETA	REY NO HEIGHT	CL1S CNF1B CNUC	CD1S CAF1B CNUH	CPN1S CPN1B CNUT	CBN1S CBN1B CLTR	CYN1S CYN1B CBTR	CSF1S CSF1B CNTR
1	21.15 -1.00 0.00	0.81E+06 81.98	0.21 0.23 0.24	-0.00 -0.00 0.49	-0.15 -0.18 0.73	0.00 0.00 0.11	0.00 0.00 0.00	0.00 0.00 -0.10
2	21.04 0.00 0.00	0.81E+06 88.88	0.34 0.34 0.24	-0.00 -0.00 0.50	-0.14 -0.14 0.74	0.00 0.00 0.22	0.00 0.00 0.01	0.00 0.00 -0.08
3	21.04 1.99 0.00	0.81E+06 87.14	0.48 0.47 0.24	-0.01 -0.03 0.50	-0.12 -0.12 0.74	0.00 0.00 0.35	0.00 0.00 0.02	-0.01 -0.01 -0.08
4	20.92 4.02 0.00	0.81E+06 88.21	0.65 0.60 0.24	-0.00 -0.04 0.51	-0.10 -0.10 0.74	0.00 0.00 0.48	0.00 0.00 0.03	-0.01 -0.01 -0.04
5	20.92 5.00 0.00	0.81E+06 88.73	0.79 0.73 0.24	-0.50 -0.05 0.51	-0.08 -0.08 0.74	0.00 0.00 0.60	0.00 0.00 0.05	-0.02 -0.02 -0.03
6	21.04 7.98 0.00	0.81E+06 88.04	0.94 0.88 0.24	-0.54 -0.07 0.50	-0.06 -0.06 0.74	0.00 0.00 0.74	0.00 0.00 0.08	-0.02 -0.02 -0.01
7	21.04 10.00 0.00	0.81E+06 85.44	1.11 1.01 0.24	-0.49 -0.08 0.50	-0.04 -0.04 0.74	0.01 0.01 0.88	0.00 0.00 0.12	-0.02 -0.02 0.02
8	21.15 11.99 0.00	0.81E+06 85.00	1.28 1.18 0.23	-0.43 -0.08 0.50	-0.02 -0.02 0.74	0.01 0.00 1.03	0.00 0.00 0.17	-0.02 -0.02 0.04
9	21.04 14.00 0.00	0.81E+06 87.58	1.48 1.35 0.24	-0.38 -0.71 0.50	0.00 0.00 0.74	0.01 0.01 1.20	0.00 0.00 0.24	-0.02 -0.02 0.06
10	20.92 15.00 0.00	0.81E+06 87.37	1.64 1.51 0.23	-0.28 -0.70 0.48	0.03 0.03 0.71	0.01 0.01 1.36	0.00 0.00 0.31	-0.02 -0.02 0.00
11	21.04 18.03 0.00	0.81E+06 87.52	1.81 1.68 0.22	-0.15 -0.71 0.48	0.06 0.06 0.70	0.01 0.01 1.51	0.00 0.00 0.40	-0.02 -0.02 0.11
12	20.92 19.99 0.00	0.81E+06 88.88	1.98 1.85 0.23	-0.05 -0.72 0.48	0.08 0.08 0.71	0.01 0.01 1.67	0.00 0.00 0.50	-0.02 -0.02 0.14
13	20.92 21.98 0.00	0.81E+06 85.38	2.17 2.04 0.23	0.08 -0.74 0.48	0.11 0.11 0.71	0.01 0.01 1.83	0.00 0.00 0.52	-0.02 -0.02 0.16

PROPULSIVE WING FORCE DATA

SUMMARY, RUN 107

PT	Q ALPHA BETA	REY NO HEIGHT	CL1S CNF1B CNUC	CD1S CAF1B CNUH	CPN1S CPN1B CNUT	CBN1S CBN1B CLTR	CYN1S CYN1B CBTR	CSF1S CSF1B CNTR
1	10.48 -2.00 0.00	0.57E+06 82.33	0.30 0.34 0.46	-1.25 -1.24 0.98	-0.22 -0.22 1.44	0.00 0.00 0.10	0.00 0.00 0.02	-0.03 -0.03 -0.11
2	10.46 -3.01 0.00	0.57E+06 88.33	0.40 0.46 0.46	-1.23 -1.23 0.98	-0.20 -0.20 1.43	0.00 0.00 0.22	0.00 0.00 0.03	-0.03 -0.03 -0.08
3	10.46 2.01 0.00	0.57E+06 88.46	0.81 0.57 0.46	-1.22 -1.24 0.98	-0.18 -0.18 1.44	0.01 0.00 0.33	0.00 0.00 0.04	-0.03 -0.03 -0.07
4	10.46 4.02 0.00	0.57E+06 87.43	0.70 0.70 0.46	-1.20 -1.25 0.98	-0.17 -0.17 1.44	0.01 0.01 0.46	0.00 0.00 0.05	-0.03 -0.03 -0.05
5	10.46 5.99 0.00	0.57E+06 85.38	0.97 0.84 0.46	-1.18 -1.27 0.99	-0.15 -0.15 1.45	0.01 0.00 0.56	0.00 0.00 0.07	-0.04 -0.04 -0.03
6	10.46 8.00 0.00	0.57E+06 85.94	1.16 0.99 0.47	-1.13 -1.26 0.99	-0.12 -0.12 1.46	0.01 0.01 0.74	0.00 0.01 0.10	-0.03 -0.03 -0.01
7	10.46 10.02 0.00	0.57E+06 85.38	1.36 1.15 0.47	-1.08 -1.30 0.99	-0.10 -0.10 1.46	0.01 0.01 0.90	0.00 0.00 0.15	-0.04 -0.04 0.01
8	10.58 11.99 0.00	0.50E+06 86.14	1.57 1.33 0.46	-1.00 -1.30 0.99	-0.08 -0.08 1.45	0.01 0.01 1.07	0.00 0.00 0.20	-0.05 -0.05 0.04
9	10.58 13.98 0.00	0.58E+06 85.71	1.80 1.52 0.47	-0.92 -1.32 0.98	-0.08 -0.08 1.45	0.01 0.01 1.26	0.00 0.00 0.28	-0.04 -0.04 0.05
10	10.48 15.99 0.00	0.57E+06 84.33	2.03 [illegible]3 0.47	-0.83 -1.38 1.00	-0.04 -0.04 1.47	0.01 0.01 1.45	0.00 0.00 0.34	-0.05 -0.05 0.07
11	10.35 17.97 0.00	0.57E+06 83.53	2.25 1.91 0.48	-0.73 -1.39 1.01	-0.02 -0.02 1.48	0.01 0.01 1.62	0.00 0.00 0.43	-0.05 -0.05 0.10
12	10.58 20.01 0.00	0.58E+06 90.00	2.44 2.09 0.47	-0.58 -1.39 0.99	0.00 0.00 1.48	0.01 0.01 1.78	0.00 0.00 0.54	-0.05 -0.05 0.12
13	10.46 21.98 0.00	0.57E+06 97.13	2.67 2.30 0.47	-0.45 -1.41 1.00	0.03 0.03 1.47	0.01 0.01 1.96	0.00 0.00 0.68	-0.06 -0.06 0.15

PROPULSIVE WING FORCE DATA

SUMMARY, RUN 108

PT	Q ALPHA BETA	REY NO HEIGHT	CL1S CNF1B CNUC	CD1S CAF1B CNUM	CPN1S CPN1B CNUT	CRN1S CRN1B CLTR	CYN1S CYN1B CDTR	CSF1S CSF1B CNTR
1	5.17		0.46	-2.60	-0.37	0.01	0.00	-0.05
	-2.02	-.78E+08	0.55	-2.58	-0.37	0.01	0.00	-0.05
	0.00	88.92	0.98	2.02	2.98	0.06	0.04	-0.13
2	5.17		0.71	-2.57	-0.34	0.01	0.01	-0.05
	0.03	0.40E+06	0.70	-2.57	-0.34	0.01	0.01	-0.05
	0.00	88.08	0.98	2.03	2.98	0.22	0.04	-0.10
3	5.29		0.81	-2.49	-0.31	0.01	0.00	-0.03
	2.00	0.41E+06	0.82	-2.52	-0.31	0.01	0.00	-0.03
	0.00	88.09	0.93	1.98	2.92	0.34	0.06	-0.08
4	5.29		1.08	-2.47	-0.30	0.01	0.00	-0.04
	3.98	0.41E+06	0.81	-2.54	-0.30	0.01	0.00	-0.04
	0.00	85.83	0.94	1.99	2.92	0.43	0.07	-0.06
5	5.29		1.33	-2.43	-0.27	0.01	0.00	-0.07
	5.01	0.41E+06	1.07	-2.56	-0.27	0.01	0.00	-0.07
	0.00	84.56	0.94	1.08	2.93	0.58	0.06	-0.04
6	5.29		1.57	-2.37	-0.25	0.01	0.00	-0.08
	7.99	0.41E+06	1.22	-2.58	-0.25	0.01	0.00	-0.08
	0.00	85.38	0.94	1.99	2.93	0.73	0.12	-0.02
7	5.28		1.83	-2.30	-0.23	0.01	0.00	-0.08
	9.98	0.41E+06	1.40	-2.58	-0.23	0.01	0.00	-0.08
	0.00	88.02	0.93	1.99	2.93	0.91	0.16	0.00
8	5.29		2.10	-2.21	-0.20	0.01	0.00	-0.08
	11.98	-.23E+09	1.60	-2.60	-0.20	0.01	0.00	-0.08
	0.00	85.31	0.94	2.00	2.94	1.08	0.22	0.03
9	5.29		2.54	-2.12	-0.18	0.01	0.00	-0.08
	14.03	0.41E+03	1.78	-2.62	-0.18	0.01	0.00	-0.08
	0.00	85.10	0.94	1.98	2.93	1.25	0.28	0.05
10	5.29		2.84	-2.00	-0.17	0.00	0.00	-0.08
	15.98	0.41E+06	1.99	-2.65	-0.17	0.00	0.00	-0.08
	0.00	85.25	0.94	2.00	2.94	1.47	0.36	0.07
11	5.28		2.93	-1.85	-0.15	0.01	0.00	-0.08
	18.04	0.41E+06	2.21	-2.66	-0.15	0.01	0.00	-0.08
	0.00	87.14	0.94	2.00	2.94	1.86	0.47	0.08
12	5.17		3.25	-1.74	-0.13	0.01	0.00	-0.11
	20.01	0.40E+06	2.46	-2.75	-0.13	0.01	0.00	-0.11
	0.00	95.64	0.98	2.04	3.00	1.88	0.58	0.11
13	5.29		3.48	-1.52	-0.10	0.01	0.00	-0.11
	22.08	0.41E+06	2.65	-2.71	-0.10	0.01	0.00	-0.11
	0.00	98.18	0.94	2.00	2.94	2.05	0.71	0.14

PROPULSIVE WING FORCE DATA

SUMMARY, RUN 109

PT	Q ALPHA BETA	REY NO HEIGHT	CL1S CNF1B CNUC	CD1S CAF1B CNUM	CPN1S CPN1B CNUT	CRN1S CRN1B CLTR	CYN1S CYN1B CDTR	CSF1S CSF1B CNTR
2	0.00		3.22	0.07	13.46	-0.31	0.00	0.30
	0.03	0.30E+08	3.22	0.07	13.46	-0.31	-0.01	0.30
	0.00	93.89	0.00	0.47	0.47	-1.27	23.08	18.80
3	0.00		6.71	-29.95	-68.91	-2.38	0.40	-0.60
	0.02	0.30E+08	6.70	-29.96	-68.91	-2.38	0.40	-0.60
	0.00	93.80	0.03	29.34	29.34	-1.20	10.84	-62.33
4	0.00		13.78	-67.65	-165.20	2.92	13.71	0.53
	0.02	0.30E+08	13.74	-67.85	-165.20	2.92	13.71	0.53
	0.00	93.88	0.00	78.20	78.20	-5.73	27.54	-158.60
5	0.00		18.54	-88.92	-238.00	6.20	23.88	-0.35
	0.01	0.30E+08	18.52	-88.92	-238.00	6.20	23.88	-0.35
	0.00	93.88	0.00	104.70	104.70	-5.42	37.01	-224.70
6	0.00		22.48	-113.80	-315.40	4.58	30.02	-0.25
	0.01	0.30E+08	22.47	-113.80	-315.40	4.58	30.02	-0.25
	0.00	93.88	0.00	132.50	132.50	-7.80	46.40	-301.00
7	0.00		25.86	-134.80	-394.80	6.82	32.53	1.28
	0.00	0.30E+08	25.85	-134.80	-394.80	6.82	32.53	1.28
	0.00	93.88	0.00	158.00	158.00	-8.69	57.55	-377.20

PROPULSIVE WING FORCE DATA

SUMMARY, RUN 110

PT	Q ALPHA BETA	REY NO HEIGHT	CL1S CNF1B CNUC	CD1S CAF1B CNUW	CPN1S CPN1B CNUT	CMN1S CMN1B CLTR	CYN1S CYN1B CDTR	CSF1S CSF1B CNTR
15	29.88		-0.03	0.01	-0.05	0.00	0.00	0.01
	-2.06	0.96E+06	-0.03	0.01	-0.05	0.00	0.00	0.01
	0.00	86.31	0.00	0.00	0.00	-0.04	0.06	-0.05
16	30.00		0.07	0.01	-0.07	0.00	0.00	0.01
	-0.05	0.96E+06	0.07	0.01	-0.07	0.00	0.00	0.01
	0.00	93.88	0.00	0.00	0.00	0.06	0.06	-0.07
17	30.12		0.17	0.02	-0.08	0.00	0.00	0.01
	2.06	0.96E+06	0.17	0.01	-0.08	0.00	0.00	0.01
	0.00	84.75	0.00	0.00	0.00	0.18	0.06	-0.08
18	30.12		0.26	0.02	-0.10	0.00	0.00	0.00
	4.06	0.96E+06	0.26	0.00	-0.10	0.00	0.00	0.00
	0.00	88.81	0.00	0.00	0.00	0.24	0.07	-0.09
19	30.00		0.35	0.03	-0.11	0.00	0.00	0.00
	6.02	0.96E+06	0.35	0.00	-0.11	0.00	0.00	0.00
	0.00	88.52	0.00	0.00	0.00	0.33	0.08	-0.11
20	30.12		0.44	0.04	-0.13	0.00	0.00	0.01
	8.02	0.96E+06	0.44	-0.02	-0.13	0.00	0.00	0.01
	0.00	83.00	0.00	0.00	0.00	0.42	0.09	-0.13
21	30.00		0.54	0.06	-0.15	0.00	0.00	0.00
	10.07	0.96E+06	0.55	-0.03	-0.15	0.00	0.00	0.00
	0.00	82.27	0.00	0.00	0.00	0.53	0.11	-0.15
22	30.12		0.65	0.08	-0.17	0.00	0.00	0.00
	12.03	0.97E+06	0.65	-0.05	-0.17	0.00	0.00	0.00
	0.00	84.10	0.00	0.00	0.00	0.63	0.13	-0.16
23	30.00		0.75	0.13	-0.19	0.00	0.00	0.00
	14.04	0.96E+06	0.76	-0.05	-0.19	0.00	0.00	0.00
	0.00	88.53	0.00	0.00	0.00	0.73	0.18	-0.19
24	29.88		0.86	0.20	-0.22	0.00	0.00	0.00
	16.03	0.96E+06	0.87	-0.04	-0.22	0.00	0.00	0.00
	0.00	84.02	0.00	0.00	0.00	0.83	0.24	-0.22
25	30.00		0.91	0.26	-0.23	0.00	0.00	0.00
	18.05	0.96E+06	0.94	-0.03	-0.23	0.00	0.00	0.00
	0.00	83.82	0.00	0.00	0.00	0.88	0.30	-0.23
26	29.88		0.98	0.33	-0.25	0.00	0.00	0.01
	20.08	0.96E+06	1.02	-0.02	-0.25	0.00	0.00	0.01
	0.00	90.81	0.00	0.00	0.00	0.94	0.37	-0.24
27	30.23		0.99	0.38	-0.27	0.00	0.00	0.00
	22.02	0.97E+06	1.06	-0.02	-0.27	0.00	0.00	0.00
	0.00	88.12	0.00	0.00	0.00	0.98	0.42	-0.27

PROPULSIVE WING FORCE DATA

SUMMARY, RUN 111

PT	Q ALPHA BETA	REY NO HEIGHT	CL1S CNF1B CNUC	CD1S CAF1B CNUW	CPN1S CPN1B CNUT	CMN1S CMN1B CLTR	CYN1S CYN1B CDTR	CSF1S CSF1B CNTR
1	21.27		0.14	-0.42	-0.18	0.00	0.00	0.01
	-2.00	0.81E+06	0.16	-0.41	-0.18	0.00	0.00	0.01
	0.00	88.30	0.00	0.50	0.50	0.07	0.00	-0.13
2	21.15		0.20	-0.42	-0.18	0.00	0.00	0.01
	0.05	0.81E+06	0.26	-0.42	-0.18	0.00	0.00	0.01
	0.00	94.45	0.00	0.51	0.51	0.18	0.00	-0.15
3	21.27		0.30	-0.40	-0.20	0.00	0.00	0.01
	2.06	0.81E+06	0.37	-0.42	-0.20	0.00	0.00	0.01
	0.00	85.71	0.00	0.50	0.50	0.29	0.01	-0.17
4	21.15		0.50	-0.30	-0.23	0.00	0.00	0.01
	4.05	0.81E+06	0.47	-0.42	-0.23	0.00	0.00	0.01
	0.00	85.41	0.00	0.51	0.51	0.38	0.02	-0.20
5	21.15		0.62	-0.38	-0.24	0.00	0.00	0.01
	6.03	0.81E+06	0.57	-0.44	-0.24	0.00	0.00	0.01
	0.00	88.77	0.00	0.51	0.51	0.48	0.04	-0.21
6	21.15		0.73	-0.38	-0.27	0.00	0.00	0.01
	8.01	0.81E+06	0.68	-0.45	-0.27	0.00	0.00	0.01
	0.00	85.60	0.00	0.51	0.51	0.58	0.05	-0.24
7	21.27		0.86	-0.32	-0.29	0.00	0.00	0.01
	10.07	0.82E+06	0.79	-0.47	-0.29	0.00	0.00	0.01
	0.00	88.74	0.00	0.50	0.50	0.71	0.06	-0.26
8	21.27		1.02	-0.27	-0.32	0.00	0.00	0.00
	12.05	0.82E+06	0.94	-0.48	-0.32	0.00	0.00	0.00
	0.00	88.21	0.00	0.51	0.51	0.84	0.12	-0.29
9	21.15		1.16	-0.22	-0.36	0.00	0.00	0.00
	14.04	0.81E+06	1.07	-0.49	-0.36	0.00	0.00	0.00
	0.00	85.35	0.00	0.51	0.51	0.97	0.17	-0.33
10	21.27		1.32	-0.15	-0.40	0.00	0.00	0.01
	16.05	0.82E+06	1.23	-0.51	-0.40	0.00	0.00	0.01
	0.00	88.35	0.00	0.51	0.51	1.12	0.24	-0.36
11	21.15		1.48	-0.07	-0.43	0.00	0.00	0.01
	18.06	0.81E+06	1.38	-0.52	-0.43	0.00	0.00	0.01
	0.00	85.83	0.00	0.51	0.51	1.24	0.31	-0.40
12	21.04		1.60	0.02	-0.48	0.00	0.00	0.01
	20.01	0.81E+06	1.51	-0.52	-0.48	0.00	0.00	0.01
	0.00	90.83	0.00	0.51	0.51	1.37	0.40	-0.43
13	21.15		1.73	0.13	-0.50	0.00	0.00	0.01
	22.05	0.81E+06	1.66	-0.53	-0.50	0.00	0.00	0.01
	0.00	88.51	0.00	0.51	0.51	1.49	0.50	-0.47

PROPULSIVE WING FORCE DATA

SUMMARY, RUN 112

PT	Q ALPHA BETA	REY NO HEIGHT	CL15 CAF16 CNWC	CD15 CAF16 CNWW	CPM15 CPM16 CMUT	CRM15 CRM16 CLTR	CYM15 CYM16 CDTR	CSF15 CSF16 CNYR
1	10.46 -2.07 0.00	0.57E+06 88.81	0.27 0.30 0.00	-0.07 -0.08 1.03	-0.23 -0.23 1.03	0.00 0.00 0.12	0.00 0.00 -0.01	0.02 0.02 -0.17
2	10.46 -0.08 0.00	0.57E+06 81.90	0.40 0.40 0.00	-0.07 -0.07 1.03	-0.25 -0.25 1.03	0.00 0.00 0.23	0.00 0.00 -0.01	0.02 0.02 -0.19
3	10.46 2.06 0.00	0.57E+06 84.13	0.54 0.51 0.00	-0.08 -0.08 1.03	-0.28 -0.28 1.03	0.00 0.00 0.33	0.00 0.00 0.00	0.01 0.01 -0.22
4	10.46 4.01 0.00	0.57E+06 83.67	0.68 0.62 0.00	-0.03 -0.07 1.03	-0.30 -0.30 1.03	0.00 0.00 0.44	0.00 0.00 0.02	0.02 0.02 -0.24
5	10.58 5.01 0.00	0.58E+06 81.00	0.81 0.73 0.00	-0.00 -0.06 1.02	-0.32 -0.32 1.02	0.00 0.00 0.55	0.00 0.00 0.04	0.01 0.01 -0.26
6	10.46 6.02 0.00	0.57E+06 84.08	0.97 0.85 0.00	-0.78 -0.01 1.04	-0.35 -0.35 1.04	0.00 0.00 0.67	0.00 0.00 0.05	0.00 0.00 -0.29
7	10.58 10.00 0.00	0.58E+06 88.46	1.10 0.95 0.00	-0.73 -0.01 1.03	-0.37 -0.37 1.03	0.00 0.00 0.78	0.00 0.00 0.00	0.01 0.01 -0.31
8	10.00 12.02 0.00	0.58E+06 83.13	1.28 1.06 0.00	-0.07 -0.01 1.01	-0.40 -0.40 1.01	0.00 0.00 0.91	0.00 0.00 0.13	0.00 0.00 -0.34
9	10.58 14.03 0.00	0.58E+06 85.81	1.43 1.24 0.00	-0.00 -0.93 1.02	-0.45 -0.45 1.02	0.00 0.00 1.05	0.00 0.00 0.19	0.00 0.00 -0.38
10	10.58 16.03 0.00	0.58E+06 83.81	1.61 1.41 0.00	-0.52 -0.95 1.03	-0.48 -0.48 1.03	0.00 0.00 1.21	0.00 0.00 0.26	0.00 0.00 -0.42
11	10.46 18.02 0.00	0.57E+06 88.13	1.80 1.57 0.00	-0.44 -0.97 1.04	-0.52 -0.52 1.04	0.00 0.00 1.38	0.00 0.00 0.34	0.00 0.00 -0.48
12	10.33 20.06 0.00	0.57E+06 90.98	1.97 1.73 0.00	-0.34 -1.00 1.05	-0.56 -0.56 1.05	0.00 0.00 1.48	0.00 0.00 0.43	0.00 0.00 -0.50
13	10.81 22.07 0.00	0.58E+06 88.37	2.08 1.85 0.00	-0.20 -0.97 1.01	-0.58 -0.58 1.01	0.00 0.00 1.60	0.00 0.00 0.52	0.00 0.00 -0.52

PROPULSIVE WING FORCE DATA

SUMMARY, RUN 113

PT	Q ALPHA BETA	REY NO HEIGHT	CL15 CAF16 CNWC	CD15 CAF16 CNWW	CPM15 CPM16 CMUT	CRM15 CRM16 CLTR	CYM15 CYM16 CDTR	CSF15 CSF16 CNYR
1	5.17 -2.02 0.00	0.40E+06 84.22	0.45 0.52 0.00	-1.80 -1.78 2.11	-0.34 -0.34 2.11	0.00 0.00 0.16	0.01 0.01 -0.02	0.00 0.00 -0.21
2	5.17 0.07 0.00	0.40E+06 87.21	0.64 0.53 0.00	-1.78 -1.78 2.10	-0.37 -0.37 2.10	0.00 0.00 0.27	0.01 0.01 -0.02	0.05 0.05 -0.24
3	5.20 2.07 0.00	0.41E+06 84.33	0.80 0.74 0.00	-1.72 -1.75 2.08	-0.38 -0.38 2.08	0.00 0.00 0.38	0.01 0.01 -0.01	0.03 0.03 -0.27
4	5.20 4.08 0.00	0.41E+06 85.81	0.95 0.83 0.00	-1.70 -1.76 2.08	-0.44 -0.44 2.08	0.00 0.00 0.48	0.01 0.01 0.00	0.01 0.01 -0.31
5	5.20 6.01 0.00	0.41E+06 84.14	1.13 0.95 0.00	-1.65 -1.76 2.08	-0.45 -0.45 2.08	0.00 0.00 0.00	0.00 0.20 0.04	0.04 0.04 -0.32
6	5.20 8.01 0.00	0.41E+06 85.52	1.20 1.08 0.00	-1.63 -1.70 2.07	-0.47 -0.47 2.07	0.00 0.00 0.70	0.01 0.01 0.05	0.01 0.01 -0.35
7	5.20 10.02 0.00	0.41E+06 85.70	1.48 1.10 0.00	-1.58 -1.80 2.07	-0.50 -0.50 2.07	0.00 0.00 0.83	0.00 0.00 0.00	0.02 0.02 -0.37
8	5.00 12.01 0.00	0.41E+06 81.75	1.66 1.31 0.00	-1.46 -1.77 2.02	-0.52 -0.52 2.02	0.00 0.00 0.95	0.00 0.00 0.13	0.02 0.02 -0.38
9	5.20 14.06 0.00	0.41E+06 88.44	1.87 1.47 0.00	-1.41 -1.83 2.07	-0.57 -0.57 2.07	0.00 0.00 1.10	0.00 0.00 0.20	0.02 0.02 -0.44
10	5.20 16.00 0.00	0.41E+06 85.33	2.00 1.66 0.00	-1.21 -1.83 2.06	-0.61 -0.61 2.06	0.00 0.00 1.27	0.00 0.00 0.27	0.02 0.02 -0.48
11	5.20 18.05 0.00	0.41E+06 83.51	2.20 1.81 0.00	-1.20 -1.85 2.07	-0.65 -0.65 2.07	0.00 0.00 1.41	0.00 0.00 0.36	0.00 0.00 -0.52
12	5.17 20.04 0.00	0.41E+06 90.82	2.36 2.03 0.00	-1.10 -1.91 2.12	-0.68 -0.68 2.12	0.00 0.00 1.60	0.00 0.00 0.48	0.02 0.02 -0.56
13	5.17 22.05 0.00	0.41E+06 88.43	2.72 2.18 0.00	-0.97 -1.93 2.12	-0.73 -0.73 2.12	0.00 0.00 1.72	0.00 0.00 0.54	0.00 0.00 -0.60

PROPULSIVE WING FORCE DATA

SUMMARY, RUN 114

PT	Q ALPHA BETA	REY NO HEIGHT	CL15 CDF15 CMOC	CD15 CAF15 CMOM	CPM15 CPM15 CMST	CBM15 CBM15 CLTR	CYM15 CYM15 CDTR	CSF15 CSF15 CNTR
15	30.23		-0.02	0.01	-0.06	0.00	-0.01	-0.05
	-2.06	0.90E+06	-0.02	0.01	-0.06	0.00	-0.01	-0.05
	5.00	83.27	0.00	0.00	0.00	-0.03	0.06	-0.05
16	30.12		0.00	0.01	-0.07	0.00	-0.01	-0.05
	-0.02	0.90E+06	0.00	0.01	-0.07	0.00	-0.01	-0.05
	5.00	80.15	0.00	0.00	0.00	0.07	0.06	-0.07
17	30.23		0.17	0.01	-0.02	0.00	-0.01	-0.04
	2.04	0.90E+06	0.18	0.01	-0.05	0.00	-0.01	-0.04
	5.00	81.11	0.00	0.00	0.00	0.15	0.06	-0.06
18	30.23		0.26	0.02	-0.10	0.00	-0.01	-0.05
	4.01	0.90E+06	0.28	0.00	-0.10	0.00	-0.01	-0.05
	5.00	84.26	0.00	0.00	0.00	0.25	0.06	-0.10
19	30.12		0.26	0.03	-0.11	0.00	-0.01	-0.05
	6.03	0.90E+06	0.26	-0.01	-0.11	0.00	-0.01	-0.05
	5.00	81.02	0.00	0.00	0.00	0.34	0.07	-0.11
20	30.12		0.45	0.04	-0.13	0.00	-0.01	-0.06
	8.02	0.90E+06	0.45	-0.03	-0.13	0.00	-0.01	-0.06
	5.00	80.16	0.00	0.00	0.00	0.43	0.08	-0.12
21	30.00		0.54	0.05	-0.14	0.00	0.01	-0.06
	10.03	0.90E+06	0.55	-0.04	-0.14	0.00	-0.01	-0.06
	5.00	85.00	0.00	0.00	0.00	0.53	0.10	-0.14
22	29.88		0.65	0.06	-0.15	0.00	-0.02	-0.06
	12.00	0.90E+06	0.66	-0.06	-0.15	0.00	-0.02	-0.06
	5.00	83.03	0.00	0.00	0.00	0.64	0.13	-0.16
23	29.88		0.76	0.13	-0.18	0.00	-0.02	-0.06
	14.01	0.90E+06	0.77	-0.06	-0.18	0.00	-0.02	-0.06
	5.00	88.38	0.00	0.00	0.00	0.74	0.17	-0.18
24	29.88		0.85	0.19	-0.21	-0.01	-0.02	-0.07
	16.04	0.90E+06	0.87	-0.05	-0.21	0.00	-0.02	-0.07
	5.00	83.60	0.00	0.00	0.00	0.83	0.23	-0.21
25	30.12		0.91	0.25	-0.23	-0.01	-0.03	-0.07
	18.02	0.90E+06	0.94	-0.05	-0.23	0.00	-0.03	-0.07
	5.00	85.26	0.00	0.00	0.00	0.88	0.26	-0.23
26	29.88		0.94	0.30	-0.24	-0.01	-0.03	-0.08
	20.01	0.90E+06	0.96	-0.04	-0.24	0.00	-0.03	-0.08
	5.00	80.50	0.00	0.00	0.00	0.91	0.34	-0.24
27	28.77		0.92	0.35	-0.26	-0.02	-0.02	-0.07
	22.00	0.90E+06	0.90	-0.02	-0.26	-0.01	-0.03	-0.07
	5.00	90.11	0.00	0.00	0.00	0.00	0.36	-0.25

PROPULSIVE WING FORCE DATA

SUMMARY, RUN 115

PT	Q ALPHA BETA	REY NO HEIGHT	CL15 CDF15 CMOC	CD15 CAF15 CMOM	CPM15 CPM15 CMST	CBM15 CBM15 CLTR	CYM15 CYM15 CDTR	CSF15 CSF15 CNTR
1	31.27		0.15	-0.44	-0.18	0.01	-0.01	-0.05
	-2.07	0.82E+06	0.17	-0.43	-0.18	0.00	-0.01	-0.05
	5.00	88.00	0.00	0.51	0.51	0.00	-0.01	-0.13
2	31.30		0.27	-0.43	-0.18	0.00	-0.01	-0.05
	0.00	0.82E+06	0.27	-0.43	-0.18	0.00	-0.01	-0.05
	5.00	88.06	0.00	0.51	0.51	0.18	-0.01	-0.15
3	31.04		0.00	-0.42	-0.30	0.00	-0.01	-0.05
	2.00	0.82E+06	0.36	-0.44	-0.30	0.00	-0.01	-0.05
	5.00	84.46	0.00	0.52	0.52	0.30	0.00	-0.17
4	30.92		0.51	-0.41	-0.32	0.00	-0.01	-0.05
	4.01	0.82E+06	0.46	-0.45	-0.32	0.00	-0.01	-0.05
	5.00	85.54	0.00	0.52	0.52	0.30	0.01	-0.19
5	30.92		0.62	-0.40	-0.35	0.00	-0.01	-0.05
	6.04	0.82E+06	0.56	-0.47	-0.35	0.00	-0.01	-0.05
	5.00	82.46	0.00	0.53	0.53	0.50	0.02	-0.21
6	30.92		0.74	-0.38	-0.38	0.00	-0.01	-0.05
	8.02	0.82E+06	0.66	-0.48	-0.38	0.00	-0.01	-0.05
	5.00	80.42	0.00	0.52	0.52	0.00	0.04	-0.23
7	31.04		0.87	-0.34	-0.38	0.00	-0.01	-0.05
	10.02	0.82E+06	0.80	-0.49	-0.38	0.00	-0.01	-0.05
	5.00	80.07	0.00	0.52	0.52	0.71	0.07	-0.25
8	30.92		1.01	-0.28	-0.33	0.00	-0.02	-0.05
	12.02	0.82E+06	0.93	-0.50	-0.33	0.00	-0.01	-0.05
	5.00	83.75	0.00	0.51	0.51	0.84	0.11	-0.30
9	30.92		1.16	-0.21	-0.35	0.00	-0.02	-0.07
	14.03	0.82E+06	1.06	-0.49	-0.35	0.00	-0.02	-0.07
	5.00	83.95	0.00	0.49	0.49	0.98	0.17	-0.32
10	30.81		1.31	-0.18	-0.30	0.00	-0.02	-0.08
	16.02	0.82E+06	1.21	-0.52	-0.30	0.00	-0.02	-0.08
	5.00	86.47	0.00	0.51	0.51	1.11	0.22	-0.38
11	30.88		1.46	-0.08	-0.42	-0.01	-0.03	-0.08
	18.02	0.82E+06	1.36	-0.53	-0.42	0.00	-0.03	-0.08
	5.00	85.26	0.00	0.50	0.50	1.25	0.30	-0.38
12	31.15		1.57	0.00	-0.48	-0.01	-0.03	-0.08
	20.01	0.82E+06	1.48	-0.54	-0.48	0.00	-0.03	-0.08
	5.00	84.07	0.00	0.50	0.50	1.35	0.37	-0.43
13	31.04		1.72	0.13	-0.50	-0.01	-0.04	-0.08
	22.10	0.82E+06	1.64	-0.54	-0.50	0.01	-0.04	-0.08
	5.00	88.53	0.00	0.50	0.50	1.48	0.48	-0.47

PROPULSIVE WING FORCE DATA

SUMMARY, RUN 116

PT	Q ALPHA BETA	REY NO HEIGHT	CL15 CSF16 CNWC	CD15 CSF16 CNWA	CPM15 CPM16 CNWT	CRM15 CRM16 CLTR	CYM15 CYM16 CDTR	CSF15 CSF16 CNTR
1	10.46		0.20	-0.07	-0.22	0.00	-0.01	-0.04
	-2.00	0.50E+06	0.20	-0.06	-0.23	0.00	-0.01	-0.04
	5.00	88.57	0.00	1.00	1.00	0.12	-0.01	-0.17
2	10.50		0.20	-0.05	-0.25	0.00	-0.01	-0.05
	-0.04	0.50E+06	0.20	-0.05	-0.25	0.00	-0.01	-0.05
	5.00	84.06	0.00	1.00	1.00	0.22	-0.01	-0.18
3	10.46		0.54	-0.05	-0.20	0.00	0.00	-0.04
	2.02	0.50E+06	0.51	-0.07	-0.20	0.00	0.00	-0.04
	5.00	87.01	0.00	1.01	1.01	0.24	0.00	-0.21
4	10.46		0.88	-0.03	-0.30	0.00	-0.01	-0.05
	4.06	0.50E+06	0.82	-0.05	-0.30	0.00	-0.01	-0.05
	5.00	88.88	0.00	1.02	1.02	0.45	0.01	-0.33
5	10.46		0.82	-0.01	-0.32	0.00	0.00	-0.06
	6.05	0.50E+06	0.73	-0.00	-0.32	0.00	0.00	-0.06
	5.00	84.00	0.00	1.01	1.01	0.55	0.03	-0.25
6	10.50		0.95	-0.77	-0.34	0.00	0.00	-0.05
	8.02	0.50E+06	0.83	-0.00	-0.34	0.00	0.00	-0.05
	5.00	85.49	0.00	1.01	1.01	0.05	0.05	-0.20
7	10.50		1.08	-0.74	-0.36	0.00	-0.01	-0.07
	10.00	0.50E+06	0.94	-0.02	-0.36	0.00	-0.01	-0.07
	5.00	84.53	0.00	1.01	1.01	0.76	0.08	-0.30
8	10.50		1.25	-0.70	-0.40	0.00	-0.01	-0.07
	12.04	0.50E+06	1.08	-0.04	-0.40	0.00	-0.01	-0.07
	5.00	84.50	0.00	1.01	1.01	0.00	0.11	-0.34
9	10.50		1.44	-0.02	-0.43	0.00	-0.02	-0.07
	14.06	0.50E+06	1.24	-0.05	-0.43	0.00	-0.02	-0.07
	5.00	85.50	0.00	1.01	1.01	1.08	0.17	-0.37
10	10.46		1.00	-0.50	-0.48	0.00	-0.02	-0.08
	16.03	0.50E+06	1.38	-0.08	-0.48	0.00	-0.02	-0.08
	5.00	86.18	0.00	1.03	1.03	1.10	0.23	-0.41
11	10.46		1.70	-0.46	-0.51	0.00	-0.02	-0.08
	18.03	0.50E+06	1.56	-0.08	-0.51	0.00	-0.02	-0.08
	5.00	84.24	0.00	1.04	1.04	1.35	0.31	-0.44
12	10.25		1.93	-0.37	-0.55	0.00	-0.03	-0.10
	20.00	0.50E+06	1.88	-1.02	-0.55	0.01	-0.03	-0.10
	5.00	91.02	0.00	1.05	1.05	1.46	0.39	-0.49
13	10.23		2.11	-0.27	-0.00	0.00	-0.04	-0.11
	22.03	0.50E+06	1.86	-1.04	-0.00	0.01	-0.04	-0.11
	5.00	88.22	0.00	1.05	1.05	1.81	0.49	-0.53

PROPULSIVE WING FORCE DATA

SUMMARY, RUN 117

PT	Q ALPHA BETA	REY NO HEIGHT	CL15 CSF16 CNWC	CD15 CSF16 CNWA	CPM15 CPM16 CNWT	CRM15 CRM16 CLTR	CYM15 CYM16 CDTR	CSF15 CSF16 CNTR
1	5.20		0.44	-1.77	-0.33	0.01	0.00	-0.02
	-2.03	0.40E+06	0.30	-1.75	-0.33	0.01	0.00	-0.03
	5.00	88.00	0.00	2.01	2.01	0.15	-0.03	-0.21
2	5.17		0.01	-1.00	-0.37	0.00	0.00	-0.04
	0.00	0.41E+06	0.01	-1.00	-0.37	0.00	0.00	-0.04
	5.00	83.53	0.00	2.00	2.00	0.25	-0.03	-0.24
3	5.20		0.70	-1.74	-0.38	0.00	0.00	-0.04
	2.04	0.42E+06	0.70	-1.77	-0.38	0.00	0.00	-0.04
	5.00	88.25	0.00	2.01	2.01	0.35	-0.02	-0.29
4	5.17		0.97	-1.75	-0.42	0.00	0.00	-0.06
	4.00	0.41E+06	0.84	-1.82	-0.42	0.00	0.00	-0.06
	5.00	85.00	0.00	2.00	2.00	0.48	0.00	-0.30
5	5.20		1.12	-1.80	-0.44	0.00	0.00	-0.07
	6.02	0.42E+06	0.94	-1.80	-0.44	0.00	0.00	-0.07
	5.00	84.00	0.00	2.00	2.00	0.58	0.02	-0.31
6	5.20		1.20	-1.85	-0.48	0.00	0.00	-0.07
	8.04	0.42E+06	1.04	-1.81	-0.48	0.00	0.00	-0.07
	5.00	88.05	0.00	2.00	2.00	0.00	0.03	-0.33
7	5.20		1.48	-1.90	-0.48	0.00	-0.01	-0.07
	10.00	0.42E+06	1.18	-1.83	-0.48	0.00	-0.01	-0.07
	5.00	86.88	0.00	2.02	2.02	0.83	0.06	-0.36
8	5.20		1.70	-1.92	-0.52	0.00	-0.01	-0.07
	12.03	0.42E+06	1.35	-1.84	-0.52	0.00	-0.01	-0.07
	5.00	88.20	0.00	2.00	2.00	0.98	0.12	-0.39
9	5.20		1.91	-1.48	-0.54	0.00	-0.02	-0.08
	14.02	0.42E+06	1.51	-1.84	-0.54	0.00	-0.02	-0.08
	5.00	85.90	0.00	2.04	2.04	1.14	0.17	-0.41
10	5.17		2.11	-1.00	-0.02	-0.01	-0.02	-0.10
	16.01	0.41E+06	1.84	-1.83	-0.02	0.00	-0.02	-0.10
	5.00	84.41	0.00	2.06	2.06	1.20	0.23	-0.40
11	5.17		2.34	-1.24	-0.04	-0.01	-0.02	-0.11
	18.03	0.41E+06	1.84	-1.90	-0.04	0.00	-0.03	-0.11
	5.00	85.41	0.00	2.05	2.05	1.45	0.33	-0.51
12	5.17		2.44	-1.11	-0.08	-0.01	-0.03	-0.13
	20.06	0.4[illegible]E+06	1.81	-1.86	-0.08	0.00	-0.03	-0.13
	5.00	90.88	0.00	2.01	2.01	1.53	0.38	-0.56
13	5.06		2.00	-0.07	-0.73	-0.01	-0.04	-0.14
	22.06	.41E+06	2.14	-1.91	-0.73	0.01	-0.04	-0.14
	5.00	98.41	0.00	2.03	2.03	1.71	0.51	-0.60

PROPULSIVE WING FORCE DATA

SUMMARY, RUN 110

PT	Q ALPHA BETA	REY NO HEIGHT	CL1S CNF1B CNWC	CD1S CAF1B CNWA	CPM1S CPM1B CMWT	CNM1S CNM1B CLTR	CYM1S CYM1B CDTR	CSF1S CSF1B CNTR
28	29.77 -2.02 0.00	0.90E+06 86.75	-0.01 -0.01 0.00	0.01 0.01 0.00	-0.05 -0.05 0.00	0.00 0.00 -0.02	0.00 0.00 0.00	0.00 0.00 -0.05
29	29.88 -0.01 0.00	0.90E+06 85.91	0.00 0.00 0.00	0.01 0.01 0.00	-0.07 -0.07 0.00	0.00 0.00 0.07	0.00 0.00 0.06	0.00 0.00 -0.07
30	29.89 2.01 0.00	0.90E+06 85.86	0.18 0.18 0.00	0.02 0.01 0.00	-0.08 -0.08 0.00	0.00 0.00 0.18	0.00 0.00 0.06	0.00 0.00 -0.08
31	29.88 4.00 0.00	0.90E+06 84.27	0.27 0.26 0.00	0.02 0.00 0.00	-0.09 -0.09 0.00	0.00 0.00 0.26	0.00 0.00 0.07	0.00 0.00 -0.09
32	29.77 5.95 0.00	0.90E+06 86.73	0.36 0.37 0.00	0.03 -0.01 0.00	-0.11 -0.11 0.00	0.00 0.00 0.35	0.00 0.00 0.08	0.00 0.00 -0.11
33	29.88 8.05 0.00	0.90E+06 84.38	0.48 0.48 0.00	0.04 -0.02 0.00	-0.12 -0.12 0.00	0.00 0.00 0.44	0.00 0.00 0.09	-0.01 -0.01 -0.12
34	30.00 10.04 0.00	0.90E+06 85.33	0.55 0.55 0.00	0.06 -0.04 0.00	-0.14 -0.14 0.00	0.00 0.00 0.53	0.00 0.00 0.10	0.00 0.00 -0.14
35	29.77 12.06 0.00	0.90E+06 84.17	0.67 0.67 0.00	0.08 -0.05 0.00	-0.16 -0.16 0.00	0.00 0.00 0.66	0.00 0.00 0.12	-0.01 -0.01 -0.16
36	29.88 14.01 0.00	0.90E+06 84.66	0.78 0.78 0.00	0.13 -0.06 0.00	-0.18 -0.18 0.00	0.00 0.00 0.75	0.00 0.00 0.18	0.00 0.00 -0.18
37	29.77 16.05 0.00	0.90E+06 86.34	0.88 0.88 0.00	0.19 -0.05 0.00	-0.21 -0.21 0.00	0.00 0.00 0.83	0.00 0.00 0.24	0.00 0.00 -0.21
38	29.86 18.10 0.00	0.90E+06 85.11	0.92 0.96 0.00	0.26 -0.04 0.00	-0.23 -0.23 0.00	0.00 0.00 0.90	0.00 0.00 0.30	0.00 0.00 -0.23
39	29.88 20.02 0.00	0.90E+06 90.57	0.97 1.02 0.00	0.32 -0.03 0.00	-0.25 -0.25 0.00	0.00 0.00 0.94	0.00 0.00 0.36	0.00 0.00 -0.25
40	30.13 22.02 0.00	0.10E+07 88.10	1.02 1.00 0.00	0.39 -0.02 0.00	-0.27 -0.27 0.00	0.00 0.00 0.98	0.00 0.00 0.43	0.00 0.00 -0.27

PROPULSIVE WING FORCE DATA

SUMMARY, RUN 110

PT	Q ALPHA BETA	REY NO HEIGHT	CL1S CNF1B CNWC	CD1S CAF1B CNWA	CPM1S CPM1B CMWT	CNM1S CNM1B CLTR	CYM1S CYM1B CDTR	CSF1S CSF1B CNTR
2	30.00 -1.98 0.00	0.90E+06 90.91	-0.03 -0.03 0.00	0.01 0.01 0.00	-0.05 -0.05 0.00	0.00 0.00 -0.03	0.00 0.00 0.06	-0.01 -0.01 -0.05
3	29.88 -0.02 0.00	0.90E+06 87.88	0.07 0.07 0.00	0.01 0.01 0.00	-0.07 -0.07 0.00	0.00 0.00 0.06	0.00 0.00 0.06	0.00 0.00 -0.06
4	29.89 1.99 0.00	0.90E+06 95.18	0.18 0.18 0.00	0.01 0.01 0.00	-0.08 -0.08 0.00	0.00 0.00 0.15	0.00 0.00 0.08	0.00 0.00 -0.08
7	29.88 3.00 0.00	0.97E+06 87.60	0.18 0.18 0.00	0.01 0.01 0.00	-0.08 -0.08 0.00	0.00 0.00 0.15	0.00 0.00 0.08	-0.01 -0.01 -0.07
8	29.88 3.99 0.00	0.97E+06 88.00	0.26 0.26 0.00	0.02 0.00 0.00	-0.08 -0.08 0.00	0.00 0.00 0.24	0.00 0.00 0.07	-0.01 -0.01 -0.08
9	29.88 5.99 0.00	0.97E+06 88.88	0.35 0.35 0.00	0.03 -0.01 0.00	-0.09 -0.09 0.00	0.00 0.00 0.33	0.00 0.00 0.08	-0.01 -0.01 -0.08
10	29.88 8.02 0.00	0.97E+06 89.91	0.44 0.44 0.00	0.04 -0.02 0.00	-0.11 -0.11 0.00	0.00 0.00 0.42	0.00 0.00 0.09	-0.01 -0.01 -0.10
11	29.88 10.01 0.00	0.97E+06 89.07	0.54 0.54 0.00	0.06 -0.04 0.00	-0.12 -0.12 0.00	0.00 0.00 0.52	0.00 0.00 0.10	-0.01 -0.01 -0.11
12	30.00 11.98 0.00	0.97E+06 87.33	0.64 0.66 0.00	0.08 -0.05 0.00	-0.13 -0.13 0.00	0.00 0.00 0.62	0.00 0.00 0.13	-0.01 -0.01 -0.13
13	29.77 13.99 0.00	0.97E+06 84.84	0.75 0.76 0.00	0.13 -0.06 0.00	-0.15 -0.15 0.00	0.00 0.00 0.73	0.00 0.00 0.17	-0.02 -0.02 -0.15
14	29.77 16.01 0.00	0.97E+06 87.48	0.85 0.87 0.00	0.18 -0.05 0.00	-0.17 -0.17 0.00	0.00 0.00 0.83	0.00 0.00 0.24	0.00 0.00 -0.17
15	29.77 17.99 0.00	0.97E+06 90.07	0.91 0.94 0.00	0.25 -0.04 0.00	-0.19 -0.19 0.00	0.00 0.00 0.88	0.00 0.00 0.30	-0.01 -0.01 -0.19
16	30.00 20.01 0.00	0.97E+06 90.55	0.98 1.01 0.00	0.33 -0.03 0.00	-0.20 -0.20 0.00	0.00 0.00 0.94	0.00 0.00 0.36	-0.01 -0.01 -0.20
17	29.77 21.99 0.00	0.97E+06 87.90	1.00 1.07 0.00	0.38 -0.02 0.00	-0.23 -0.23 0.00	0.00 0.00 0.97	0.00 0.00 0.42	-0.01 -0.01 -0.23

PROPULSIVE WING FORCE DATA

SUMMARY, RUN 120

PT	Q ALPHA BETA	REY NO HEIGHT	CL15 CSF16 CRUC	CD15 CSF16 CRUM	CPM15 CSM16 CRUT	CRM15 CRM16 CLTR	CYM15 CYM16 CDTR	CSF15 CSF16 CNTR
1	21.04 -1.98 0.00	0.51E+06 53.07	0.14 0.16 0.00	-0.42 -0.42 0.51	-0.15 -0.15 0.51	0.00 0.00 0.07	0.00 0.00 -0.01	0.00 0.00 -0.12
2	21.04 -0.01 0.00	0.51E+06 56.95	0.26 0.26 0.00	-0.42 -0.42 0.51	-0.16 -0.16 0.51	0.00 0.00 0.16	0.00 0.00 0.00	0.00 0.00 -0.13
3	20.92 1.98 0.00	0.51E+06 60.86	0.37 0.36 0.00	-0.41 -0.43 0.51	-0.18 -0.18 0.51	0.00 0.00 0.27	0.00 0.00 0.01	-0.01 -0.01 -0.15
4	20.92 3.96 0.00	0.51E+06 64.80	0.48 0.46 0.00	-0.40 -0.43 0.51	-0.20 -0.20 0.51	0.00 0.00 0.38	0.00 0.00 0.02	-0.01 -0.01 -0.16
5	20.92 5.93 0.00	0.51E+06 68.63	0.61 0.57 0.00	-0.38 -0.46 0.51	-0.21 -0.21 0.51	0.00 0.00 0.48	0.00 0.00 0.03	0.00 0.00 -0.18
6	20.92 6.93 0.00	0.51E+06 57.24	0.73 0.67 0.00	-0.36 -0.46 0.51	-0.23 -0.23 0.51	0.00 0.00 0.58	0.00 0.00 0.05	-0.01 -0.01 -0.20
7	20.01 9.90 0.00	0.51E+06 60.34	0.86 0.78 0.00	-0.34 -0.46 0.51	-0.25 -0.25 0.51	0.00 0.65 0.70	0.00 0.00 0.07	-0.01 -0.01 -0.21
8	20.92 11.88 0.00	0.51E+06 65.76	1.00 0.91 0.00	-0.29 -0.40 0.51	-0.27 -0.27 0.51	0.00 0.00 0.82	0.00 0.00 0.11	-0.01 -0.01 -0.24
9	20.92 13.97 0.00	0.51E+06 69.45	1.16 1.07 0.00	-0.23 -0.31 0.51	-0.30 -0.30 0.51	0.00 0.00 0.97	0.00 0.00 0.17	-0.01 -0.01 -0.26
10	20.92 15.96 0.00	0.51E+06 64.50	1.33 1.23 0.00	-0.16 -0.32 0.51	-0.33 -0.33 0.51	0.00 0.00 1.12	0.00 0.00 0.23	-0.02 -0.02 -0.30
11	21.04 17.96 0.00	0.51E+06 64.63	1.46 1.36 0.00	-0.08 -0.23 0.51	-0.36 -0.36 0.51	0.00 0.00 1.24	0.00 0.00 0.30	0.00 0.00 -0.33
12	20.00 19.96 0.00	0.51E+06 60.77	1.60 1.50 0.00	0.00 -0.15 0.52	-0.38 -0.38 0.52	0.00 0.00 1.36	0.00 0.00 0.38	-0.01 -0.01 -0.36
13	20.92 22.00 0.00	0.51E+06 58.19	1.73 1.64 0.00	0.10 -0.15 0.51	-0.42 -0.42 0.51	0.00 0.00 1.48	0.00 0.00 0.48	-0.01 -0.01 -0.38

PROPULSIVE WING FORCE DATA

SUMMARY, RUN 121

PT	Q ALPHA BETA	REY NO HEIGHT	CL15 CSF16 CRUC	CD15 CSF16 CRUM	CPM15 CPM16 CRUT	CRM15 CRM16 CLTR	CYM15 CYM16 CDTR	CSF15 CSF16 CNTR
1	10.50 -2.01 0.00	0.50E+06 53.50	0.23 0.20 0.00	-0.08 -0.07 1.01	-0.21 -0.21 1.01	0.00 0.00 0.00	0.01 0.01 0.01	-0.01 -0.01 -0.14
2	10.46 -0.01 0.00	0.57E+06 50.56	0.35 0.35 0.00	-0.08 -0.08 1.02	-0.23 -0.23 1.02	0.01 0.01 0.17	0.01 0.01 0.01	-0.02 -0.02 -0.16
3	10.46 2.01 0.00	0.50E+06 52.10	0.48 0.46 0.00	-0.07 -0.08 1.02	-0.24 -0.24 1.02	0.01 0.01 0.26	0.01 0.01 0.02	-0.03 -0.03 -0.18
4	10.35 3.98 0.00	0.57E+06 55.17	0.65 0.59 0.00	-0.07 -0.01 1.04	-0.26 -0.26 1.04	0.01 0.01 0.40	0.01 0.01 0.03	-0.03 -0.03 -0.19
5	10.50 5.98 0.00	0.50E+06 57.24	0.78 0.67 0.00	-0.04 -0.01 1.02	-0.28 -0.28 1.02	0.01 0.01 0.48	0.01 0.01 0.06	-0.03 -0.03 -0.21
6	10.50 7.98 0.00	0.50E+06 54.37	0.90 0.78 0.00	-0.01 -0.03 1.02	-0.30 -0.30 1.02	0.01 0.01 0.00	0.01 0.01 0.06	-0.03 -0.03 -0.23
7	10.50 9.98 0.00	0.50E+06 53.00	1.00 0.87 0.00	-0.00 -0.05 0.01	-0.30 -0.30 0.01	0.01 0.01 0.00	0.00 0.00 0.00	-0.04 -0.04 -0.24
8	10.50 12.00 0.00	0.50E+06 51.72	1.17 1.01 0.00	-0.06 -0.00 0.95	-0.33 -0.33 0.95	0.01 0.01 0.03	0.00 0.00 0.12	-0.04 -0.04 -0.27
9	10.46 13.98 0.00	0.57E+06 50.07	1.36 1.16 0.00	-0.01 -0.02 0.96		0.01 0.00 0.06	0.00 0.01 0.17	-0.04 -0.04 -0.30
10	10.46 15.99 0.00	0.57E+06 47.41	1.53 1.33 0.00	-0.03 -0.03 0.96	-0.40 -0.40 0.96	0.01 0.01 1.13	0.00 0.01 0.24	-0.04 -0.04 -0.33
11	10.35 17.96 0.00	0.57E+06 45.06	1.71 1.46 0.00	-0.05 -0.05 0.97	-0.43 -0.43 0.97	0.01 0.01 1.27	0.00 0.00 0.31	-0.05 -0.05 -0.37
12	10.00 19.96 0.00	0.50E+06 50.72	1.82 1.60 0.00	-0.04 -0.04 0.94	-0.45 -0.45 0.94	0.01 0.01 1.36	0.00 0.00 0.38	-0.04 -0.04 -0.38
13	10.50 21.99 0.00	0.50E+06 50.11	1.90 1.70 0.00	-0.23 -0.05 0.96	-0.48 -0.48 0.96	0.01 0.01 1.52	0.00 0.01 0.40	-0.04 -0.04 -0.42

PROPULSIVE WING FORCE DATA

SUMMARY, RUN 122

PT	Q ALPHA BETA	NET EJ HEIGHT	CL15 CAF10 CNUC	CD15 CAF10 CNUN	CPM15 CPM10 CNUT	CRM15 CRM10 CLTD	CYM15 CYM10 CDTD	CSF15 CSF10 CDTD
1	5.20		0.27	-1.00	-0.30	0.01	0.01	-0.01
	-1.00	0.41E+00	0.33	-1.00	-0.30	0.01	0.01	-0.01
	0.00	84.33	0.00	1.01	1.01	-0.00	0.06	-0.17
2	5.17		0.44	-1.00	-0.32	0.01	0.01	-0.03
	-0.01	0.40E+00	0.44	-1.00	-0.32	0.01	0.01	-0.03
	0.00	81.26	0.00	1.00	1.00	0.00	0.05	-0.20
3	5.17		0.87	-1.00	-0.35	0.01	0.01	-0.05
	2.00	0.40E+00	0.[illegible]	-1.70	-0.35	0.01	0.01	-0.05
	0.00	80.01	0.00	1.00	1.00	0.21	0.05	-0.22
4	5.17		0.70	-1.00	-0.36	0.01	0.01	-0.07
	3.00	0.40E+00	0.80	-1.71	-0.36	0.01	0.01	-0.07
	0.00	87.00	0.00	1.00	1.00	0.31	0.06	-0.24
5	5.20		0.94	-1.00	-0.38	0.01	0.01	-0.07
	5.00	0.41E+00	0.77	-1.00	-0.38	0.01	0.01	-0.07
	0.00	84.30	0.00	1.02	1.02	0.42	0.06	-0.25
6	5.20		1.11	-1.00	-0.40	0.01	0.01	-0.06
	7.00	0.41E+00	0.00	-1.70	-0.40	0.01	0.01	-0.06
	0.00	83.07	0.00	1.01	1.01	0.53	0.06	-0.20
7	5.20		1.32	-1.02	-0.42	0.01	0.01	-0.05
	10.00	0.41E+00	1.04	-1.72	-0.42	0.01	0.01	-0.05
	0.00	81.77	0.00	1.02	1.02	0.00	0.10	-0.30
8	5.20		1.50	-1.40	-0.44	0.01	0.01	-0.06
	12.30	0.41E+00	1.10	-1.74	-0.44	0.01	0.01	-0.06
	0.00	84.07	0.00	1.02	1.02	0.62	0.13	-0.31
9	5.20		1.00	-1.40	-0.47	0.01	0.01	-0.11
	14.02	0.41E+00	1.30	-1.77	-0.47	0.01	0.01	-0.11
	0.00	85.74	0.00	1.03	1.03	0.04	0.17	-0.36
10	5.20		1.04	-1.30	-0.50	0.01	0.01	-0.08
	15.00	0.41E+00	1.50	-1.70	-0.50	0.01	0.01	-0.08
	0.00	86.42	0.00	1.04	1.04	1.13	0.24	-0.30
11	5.17		2.14	-1.20	-0.53	0.01	0.00	-0.10
	17.00	0.40E+00	1.00	-1.06	-0.53	0.01	0.01	-0.10
	0.00	88.50	0.00	1.07	1.07	1.26	0.30	-0.41
12	5.17		2.32	-1.15	-0.56	0.01	0.00	-0.00
	20.01	0.40E+00	1.70	-1.07	-0.56	0.01	0.01	-0.00
	0.00	90.70	0.00	1.00	1.00	1.30	0.37	-0.45
13	5.00		2.50	-1.05	-0.02	0.01	0.00	-0.10
	21.00	0.40E+00	1.00	-1.03	-0.02	0.01	0.01	-0.10
	0.00	90.00	0.00	2.02	2.02	1.06	0.47	-0.40

PROPULSIVE WING FORCE DATA

SUMMARY, RUN 123

PT	Q ALPHA BETA	NET EJ HEIGHT	CL15 CAF10 CNUC	CD15 CAF10 CNUN	CPM15 CPM10 CNUT	CRM15 CRM10 CLTD	CYM15 CYM10 CDTD	CSF15 CSF10 CDTD
1	30.00		-0.04	0.02	-0.05	0.01	-0.02	-0.02
	-1.00	0.97E+00	-0.04	0.01	-0.05	0.01	-0.02	-0.02
	5.01	83.20	0.00	0.00	0.00	-0.00	0.00	-0.05
2	30.00		0.00	0.01	-0.07	0.01	-0.02	-0.02
	0.01	0.97E+00	0.00	0.01	-0.07	0.01	-0.02	-0.02
	5.01	90.10	0.00	0.00	0.00	0.04	0.00	-0.00
3	30.12		0.14	0.01	-0.00	0.00	-0.00	-0.02
	1.00	0.97E+00	0.14	0.01	-0.00	0.00	-0.02	-0.02
	5.01	91.30	0.00	0.00	0.00	0.13	0.00	-0.07
4	30.00		0.23	0.02	-0.00	0.00	-0.00	-0.02
	4.00	0.97E+00	0.23	0.00	-0.00	0.00	-0.03	-0.03
	5.01	88.10	0.00	0.00	0.00	0.22	0.07	-0.00
5	30.00		0.33	0.03	-0.00	0.00	-0.02	-0.03
	5.00	0.97E+00	0.33	-0.01	-0.00	0.00	-0.00	-0.03
	5.01	87.00	0.00	0.30	0.00	0.31	0.07	-0.00
6	30.22		0.42	0.04	-0.10	0.00	-0.02	-0.0[illegible]
	7.00	0.97E+00	0.42	-0.02	-0.10	0.0[illegible]	-0.02	-0.04
	5.01	87.41	0.00	0.00	0.00	[illegible]	0.00	-0.10
7	29.00		0.52	0.00	-0.12	0.00	-0.02	-0.04
	10.01	0.96E+00	0.52	-0.03	-0.12	0.00	-0.02	-0.04
	5.01	86.72	0.00	0.00	0.00	0.50	0.10	-0.11
8	29.00		0.63	0.00	-0.13	0.00	-0.03	-0.00
	11.00	0.96E+00	0.63	-0.00	-0.13	0.20	-0.03	-0.00
	5.01	84.07	0.00	0.00	0.00	0.61	0.13	-0.13
9	29.77		0.70	0.13	-0.15	0.00	-0.03	-0.00
	14.00	0.96E+00	0.70	-0.00	-0.15	0.00	-0.03	-0.00
	5.01	80.27	0.00	0.00	0.00	0.72	0.17	-0.15
10	29.00		0.72	0.10	-0.17	-0.01	-0.03	-0.00
	15.03	0.96E+00	0.04	-0.00	-0.17	0.00	-0.03	-0.00
	5.01	87.07	0.00	0.00	0.00	0.00	0.23	-0.17
11	30.00		0.00	0.25	-0.10	-0.01	-0.03	-0.00
	17.[illegible]	0.97E+00	0.01	-0.04	-0.10	0.00	-0.03	-0.00
	5.01	88.74	0.00	0.00	0.00	0.00	0.30	-0.10
12	29.00		0.00	0.30	-0.21	-0.01	-0.00	-0.11
	19.97	0.96E+00	0.04	-0.02	-0.21	0.00	-0.03	-0.11
	5.01	90.40	0.00	0.00	0.00	0.07	0.34	-0.30
13	30.00		0.00	0.35	-0.21	-0.03	-0.01	-0.10
	21.00	0.97E+00	0.00	-0.02	-0.21	-0.[illegible]	-0.02	-0.10
	5.01	87.00	0.00	0.00	0.00	0.07	0.38	-0.21

PROPULSIVE WING FORCE DATA

SUMMARY, RUN 194

PT	Q ALPHA BETA	REY NO HEIGHT	CL15 CSF10 CRUC	CD15 CAF10 CRUN	CPR15 CPR10 CRUT	CBR15 CBR10 CLTR	CYR15 CYR10 CDTR	CSF15 CSF10 CNTR
1	21.04		0.12	-0.42	-0.15	0.01	-0.02	-0.01
	-2.00	0.81E+06	0.13	-0.43	-0.15	0.01	-0.02	-0.01
	5.01	53.37	0.00	0.51	0.51	0.06	0.00	-0.12
2	21.04		0.23	-0.43	-0.17	0.01	-0.02	-0.02
	0.00	0.81E+06	0.23	-0.43	-0.17	0.01	-0.02	-0.02
	5.01	90.42	0.00	0.51	0.51	0.14	0.00	-0.14
3	21.04		0.36	-0.42	-0.18	0.00	-0.02	-0.03
	1.00	0.81E+06	0.34	-0.43	-0.18	0.00	-0.02	-0.03
	5.01	88.26	0.00	0.51	0.51	0.25	0.00	-0.15
4	21.04		0.47	-0.41	-0.20	0.00	-0.02	-0.03
	3.00	0.81E+06	0.44	-0.44	-0.20	0.00	-0.02	-0.03
	5.01	87.00	0.00	0.51	0.51	0.35	0.01	-0.17
5	20.92		0.60	-0.40	-0.22	0.00	-0.02	-0.04
	5.00	0.81E+06	0.55	-0.46	-0.22	0.00	-0.02	-0.04
	5.01	86.10	0.00	0.51	0.51	0.46	0.02	-0.18
6	20.92		0.72	-0.38	-0.23	0.00	-0.02	-0.04
	7.00	0.81E+06	0.66	-0.47	-0.23	0.00	-0.02	-0.04
	5.01	85.13	0.00	0.51	0.51	0.57	0.04	-0.20
7	21.15		0.84	-0.34	-0.25	0.00	-0.02	-0.05
	3.00	0.81E+06	0.76	-0.46	-0.25	0.00	-0.02	-0.05
	5.01	85.48	0.00	0.51	0.51	0.67	0.07	-0.22
8	21.04		0.90	-0.30	-0.28	0.00	-0.03	-0.05
	12.02	0.81E+06	0.80	-0.50	-0.28	0.01	-0.02	-0.05
	5.01	85.08	0.00	0.51	0.51	0.81	0.11	-0.24
9	20.92		1.14	-0.24	-0.30	0.00	-0.03	-0.07
	13.00	0.81E+06	1.00	-0.51	-0.30	0.01	-0.03	-0.07
	5.01	85.51	0.00	0.52	0.52	0.95	0.16	-0.27
10	20.92		1.28	-0.18	-0.33	0.00	-0.03	-0.08
	18.01	0.81E+06	1.10	-0.53	-0.33	0.01	-0.03	-0.08
	5.01	86.36	0.00	0.52	0.52	1.08	0.22	-0.30
11	21.04		1.43	-0.10	-0.36	0.00	-0.03	-0.10
	17.98	0.81E+06	1.33	-0.54	-0.36	0.01	-0.03	-0.10
	5.01	87.98	0.00	0.51	0.51	1.21	0.28	-0.33
12	20.81		1.57	-0.01	-0.38	0.00	-0.03	-0.12
	18.98	0.80E+06	1.48	-0.55	-0.38	0.01	-0.03	-0.12
	5.01	90.75	0.00	0.52	0.52	1.34	0.38	-0.38
13	20.92		1.71	0.10	-0.42	0.00	-0.04	-0.14
	22.00	0.81E+06	1.62	-0.55	-0.42	0.01	-0.03	-0.14
	5.01	94.22	0.00	0.52	0.52	1.46	0.48	-0.38

PROPULSIVE WING FORCE DATA

SUMMARY, RUN 195

PT	Q ALPHA BETA	REY NO HEIGHT	CL15 CSF10 CRUC	CD15 CAF10 CRUN	CPR15 CPR10 CRUT	CBR15 CBR10 CLTR	CYR15 CYR10 CDTR	CSF15 CSF10 CNTR
1	10.35		0.10	-0.90	-0.22	0.01	-0.02	-0.03
	-1.98	0.57E+06	0.22	-0.89	-0.22	0.01	-0.02	-0.03
	5.01	82.52	0.00	1.34	1.04	0.04	0.01	-0.15
2	10.56		0.22	-0.87	-0.23	0.01	-0.02	-0.04
	-0.02	0.56E+06	0.22	-0.87	-0.23	0.01	-0.02	-0.04
	5.01	88.30	0.00	1.02	1.02	0.14	0.01	-0.18
3	10.46		0.47	-0.87	-0.25	0.01	-0.02	-0.07
	1.99	0.57E+06	0.44	-0.88	-0.25	0.01	-0.02	-0.07
	5.01	87.88	0.00	1.03	1.03	0.26	0.02	-0.18
4	10.46		0.90	-0.85	-0.27	0.00	-0.02	-0.08
	4.00	0.57E+06	0.54	-0.85	-0.27	0.00	-0.01	-0.08
	5.01	88.00	0.00	1.03	1.03	0.36	0.03	-0.20
5	10.46		0.75	-0.84	-0.28	0.00	-0.02	-0.08
	6.02	0.57E+06	0.66	-0.81	-0.28	0.00	-0.02	-0.08
	5.01	88.20	0.00	1.03	1.03	0.47	0.11	-0.22
6	10.46		0.88	-0.81	-0.31	0.00	-0.02	-0.08
	7.00	0.57E+06	0.76	-0.82	-0.31	0.00	-0.02	-0.08
	5.01	87.56	0.00	1.03	1.03	0.56	0.06	-0.24
7	10.46		1.03	-0.77	-0.32	0.00	-0.02	-0.07
	9.00	0.57E+06	0.88	-0.84	-0.32	0.00	-0.02	-0.07
	5.01	87.74	0.00	1.0.	1.03	0.70	0.08	-0.26
8	10.46		1.20	-0.72	-0.35	0.00	-0.02	-0.08
	11.00	0.57E+06	1.02	-0.85	-0.35	0.01	-0.02	-0.08
	5.01	87.37	0.00	1.03	1.03	0.83	0.12	-0.28
9	10.46		1.38	-0.63	-0.38	0.00	-0.03	-0.07
	13.99	0.57E+06	1.19	-0.86	-0.38	0.01	-0.02	-0.07
	5.01	87.08	0.00	1.04	1.04	0.98	0.16	-0.31
10	10.35		1.58	-0.50	-0.42	0.00	-0.03	-0.08
	16.98	0.57E+06	1.34	-0.88	-0.42	0.01	-0.03	-0.08
	5.01	86.13	0.00	1.05	1.05	1.13	0.23	-0.35
11	10.56		1.71	-0.46	-0.44	0.00	-0.03	-0.12
	18.00	0.56E+06	1.48	-0.89	-0.44	0.01	-0.03	-0.12
	5.01	85.98	0.00	1.03	1.03	1.27	0.30	-0.37
12	10.35		1.81	-0.40	-0.47	0.00	-0.02	-0.15
	18.98	0.57E+06	1.66	-1.02	-0.47	0.01	-0.02	-0.15
	5.01	83.32	0.00	1.05	1.05	1.43	0.38	-0.40
13	10.58		2.01	-0.38	-0.50	0.00	-0.03	-0.18
	21.99	0.56E+06	1.78	-1.01	-0.50	0.02	-0.03	-0.18
	5.01	100.70	0.00	1.02	1.02	1.52	0.47	-0.43

PROPULSIVE WING FORCE DATA

SUMMARY. RUN 126

PT	Q ALPHA BETA	RET NO HEIGHT	CL15 CDF15 CDC	CD15 CAF15 CDM	CPR15 CPR15 CMT	CBR15 CBR15 CLTR	CYR15 CYR15 CDTR	CSF15 CSF15 CNTR
1	5.29 -1.00 5.01	0.41E+06 82.29	0.29 0.34 0.00	-1.77 -1.78 2.06	-0.22 -0.22 2.06	0.01 0.01 -0.01	-0.01 -0.01 0.01	-0.05 -0.05 -0.19
2	5.29 -0.01 5.01	0.41E+06 80.26	0.48 0.48 0.00	-1.77 -1.77 2.06	-0.22 -0.22 2.06	0.01 0.01 0.12	-0.01 -0.01 0.01	-0.05 -0.05 -0.19
3	5.29 2.03 5.01	0.41E+06 87.74	0.84 0.58 0.00	-1.75 -1.77 2.06	-0.20 -0.20 2.06	0.01 0.01 0.21	-0.01 -0.01 0.02	-0.05 -0.05 -0.22
4	5.17 3.96 5.01	0.40E+06 87.08	0.83 0.71 0.00	-1.71 -1.77 2.04	-0.37 -0.37 2.04	0.00 0.01 0.25	-0.01 -0.01 0.03	-0.07 -0.07 -0.24
5	5.17 6.00 5.01	0.40E+06 85.04	0.95 0.78 0.00	-1.63 -1.72 1.98	-0.20 -0.20 1.98	0.00 0.00 0.42	-0.02 -0.02 0.04	-0.06 -0.06 -0.27
6	5.17 8.02 5.01	0.40E+06 84.48	1.21 0.98 0.00	-1.58 -1.74 1.98	-0.41 -0.41 1.98	0.00 0.01 0.62	-0.02 -0.01 0.07	-0.08 -0.08 -0.28
7	5.29 10.00 5.01	0.41E+06 85.04	1.31 1.03 0.00	-1.52 -1.72 1.94	-0.43 -0.43 1.94	0.00 0.01 0.80	-0.02 -0.02 0.08	-0.10 -0.10 -0.31
8	5.17 11.98 5.01	0.40E+06 85.47	1.56 1.21 0.00	-1.48 -1.77 1.90	-0.48 -0.48 1.90	0.00 0.01 0.95	-0.02 -0.02 0.13	-0.10 -0.10 -0.33
9	5.29 14.02 5.01	0.41E+06 85.02	1.72 1.34 0.00	-1.37 -1.74 1.94	-0.48 -0.48 1.94	0.00 0.01 0.98	-0.02 -0.02 0.18	-0.10 -0.10 -0.36
10	5.17 16.00 5.01	0.40E+06 85.11	1.97 1.53 0.00	-1.31 -1.81 1.98	-0.53 -0.53 1.98	0.00 0.01 1.16	-0.03 -0.02 0.24	-0.14 -0.14 -0.41
11	5.17 18.00 5.01	0.40E+06 86.25	2.16 1.66 0.00	-1.22 -1.82 1.98	-0.55 -0.55 1.98	0.00 0.01 1.30	-0.03 -0.03 0.31	-0.15 -0.15 -0.42
12	5.17 20.00 5.01	0.40E+06 86.73	2.37 1.84 0.00	-1.11 -1.86 2.00	-0.58 -0.58 2.00	0.00 0.01 1.44	-0.03 -0.03 0.38	-0.16 -0.16 -0.46
13	5.29 21.98 5.01	0.41E+06 88.04	2.48 1.94 0.00	-0.98 -1.84 1.96	-0.61 -0.61 1.96	0.00 0.02 1.53	-0.03 -0.03 0.47	-0.20 -0.20 -0.48

PROPULSIVE WING FORCE DATA

SUMMARY. RUN 127

PT	Q ALPHA BETA	RET NO HEIGHT	CL15 CDF15 CDC	CD15 CAF15 CDM	CPR15 CPR15 CMT	CBR15 CBR15 CLTR	CYR15 CYR15 CDTR	CSF15 CSF15 CNTR
16	0.00 0.00 0.00	0.30E+06 72.00	-0.00 -0.00 13.00	0.00 0.00 0.00	-11.71 -11.71 13.00	-0.20 -0.20 -4.40	-2.27 -2.27 17.00	-0.27 -0.27 -10.71
17	0.00 0.00 0.00	0.30E+06 72.00	0.20 0.20 21.24	-17.00 -17.00 0.00	-5.03 -5.03 21.24	-0.00 -0.00 -0.20	-24.03 -24.03 24.00	-2.04 -2.04 -3.07
18	0.00 0.01 0.00	0.30E+06 72.00	2.26 2.34 42.22	-33.00 -33.00 0.00	14.00 14.00 42.22	-11.40 -11.40 -13.07	-30.40 -30.40 40.00	-1.00 -1.00 10.00
19	0.00 0.01 0.00	0.30E+06 72.00	4.20 4.19 53.03	-43.03 -43.03 0.00	28.01 28.01 53.03	-11.28 -11.28 -15.78	-45.13 -45.13 51.03	-0.00 -0.00 30.30
20	0.00 0.01 0.00	0.30E+06 72.00	2.03 2.01 60.04	-58.22 -58.22 0.00	47.41 47.41 60.04	-18.20 -18.01 -22.37	-53.24 -53.24 58.00	-2.00 -2.00 57.00
21	0.00 0.02 0.00	0.30E+06 72.00	5.22 5.21 77.02	-64.00 -64.00 0.00	53.94 53.94 77.02	-18.26 -18.24 -22.53	-58.02 -58.02 76.12	-2.21 -2.21 84.02

PROPULSIVE WING FORCE DATA

SUMMARY, RUN 120

PT	Q ALPHA BETA	RET NO HEIGHT	CL15 CDF15 CMC	CD15 CAF15 CMA	CPR15 CPR15 CMT	CBR15 CBR15 CLTR	CYR15 CYR15 CDTR	CSF15 CSF15 CMTR
2	20.20 -2.01 0.00	0.90E+06 81.04	0.01 0.01 0.00	0.01 0.01 0.00	-0.01 -0.01 0.00	0.00 0.00 0.00	0.00 0.00 0.00	0.01 0.01 0.00
3	20.00 0.01 0.00	0.90E+06 80.50	0.04 0.04 0.00	0.01 0.01 0.00	0.03 0.03 0.00	0.00 0.00 0.03	0.00 0.00 0.00	0.01 0.01 0.03
4	20.00 1.00 0.00	0.90E+06 80.47	0.07 0.07 0.00	0.01 0.01 0.00	0.07 0.07 0.00	0.00 0.00 0.00	0.00 0.00 0.00	0.01 0.01 0.07
5	20.00 4.00 0.00	0.90E+06 87.00	0.11 0.11 0.00	0.02 0.01 0.00	0.11 0.11 0.00	0.00 0.00 0.00	0.00 0.00 0.00	0.01 0.01 0.11
6	20.12 5.00 0.00	0.90E+06 87.04	0.14 0.14 0.00	0.02 0.01 0.00	0.15 0.15 0.00	0.00 0.00 0.12	0.00 0.00 0.07	0.01 0.01 0.15
7	20.12 7.00 0.00	0.90E+06 87.27	0.18 0.18 0.00	0.03 0.00 0.00	0.19 0.19 0.00	0.00 0.00 0.16	0.00 0.00 0.07	0.00 0.00 0.20
8	20.00 9.00 0.00	0.90E+06 84.40	0.22 0.23 0.00	0.04 0.00 0.00	0.24 0.24 0.00	0.00 0.00 0.21	0.00 0.00 0.00	0.01 0.01 0.24
9	20.00 11.00 0.00	0.90E+06 84.85	0.26 0.27 0.00	0.05 0.00 0.00	0.29 0.29 0.00	0.00 0.00 0.24	0.00 0.00 0.10	0.01 0.01 0.29
10	20.00 14.01 0.00	0.90E+06 85.43	0.30 0.31 0.00	0.07 0.00 0.00	0.33 0.33 0.00	0.00 0.00 0.27	0.00 0.00 0.12	0.01 0.01 0.33
11	20.00 15.00 0.00	0.90E+06 85.04	0.33 0.34 0.00	0.10 0.00 0.00	0.36 0.36 0.00	0.00 0.00 0.31	0.00 0.00 0.14	0.01 0.01 0.36
12	20.00 17.00 0.00	0.90E+06 87.30	0.33 0.35 0.00	0.11 0.01 0.00	0.36 0.36 0.00	0.00 0.00 0.31	0.00 0.00 0.16	0.01 0.01 0.37
13	20.00 19.00 0.00	0.90E+06 88.44	0.35 0.37 0.00	0.12 0.01 0.00	0.38 0.38 0.00	0.00 0.00 0.32	0.00 0.00 0.17	0.01 0.01 0.38
14	20.00 22.01 0.00	0.90E+06 95.00	0.38 0.39 0.00	0.15 0.01 0.00	0.40 0.40 0.00	0.00 0.00 0.33	0.00 0.00 0.19	0.01 0.01 0.40

PROPULSIVE WING FORCE DATA

SUMMARY, RUN 100

PT	Q ALPHA BETA	RET NO HEIGHT	CL15 CDF15 CMC	CD15 CAF15 CMA	CPR15 CPR15 CMT	CBR15 CBR15 CLTR	CYR15 CYR15 CDTR	CSF15 CSF15 CMTR
1	21.04 -1.00 0.00	0.81E+06 81.51	0.07 0.08 0.25	-0.20 -0.20 0.00	0.03 0.03 0.25	0.00 0.00 0.00	0.00 0.00 0.01	0.01 0.01 0.00
2	20.02 -0.01 0.00	0.80E+06 80.20	0.12 0.12 0.25	-0.20 -0.20 0.00	0.07 0.07 0.25	0.00 0.00 0.11	0.00 0.00 0.01	0.01 0.01 0.07
3	21.10 1.00 0.00	0.81E+06 80.37	0.17 0.18 0.25	-0.10 -0.20 0.00	0.11 0.11 0.25	0.00 0.00 0.14	0.00 0.00 0.02	0.01 0.01 0.11
4	21.04 4.00 0.00	0.81E+06 80.56	0.20 0.19 0.25	-0.10 -0.20 0.00	0.15 0.15 0.25	0.00 0.00 0.17	0.00 0.00 0.02	0.01 0.01 0.15
5	21.04 5.00 0.00	0.81E+06 80.77	0.27 0.25 0.25	-0.10 -0.21 0.00	0.20 0.20 0.25	0.00 0.00 0.22	0.00 0.00 0.02	0.01 0.01 0.19
6	21.04 6.01 0.00	0.81E+06 87.34	0.32 0.30 0.25	-0.17 -0.21 0.00	0.25 0.25 0.25	0.00 0.00 0.27	0.00 -0.01 0.04	0.01 0.01 0.24
7	21.15 9.00 0.00	0.81E+06 88.34	0.38 0.35 0.25	-0.15 -0.21 0.00	0.30 0.30 0.25	0.00 0.00 0.33	0.00 -0.01 0.00	0.01 0.01 0.29
8	21.15 12.00 0.00	0.81E+06 85.37	0.44 0.40 0.25	-0.13 -0.21 0.00	0.35 0.35 0.25	0.00 0.00 0.38	-0.01 -0.01 0.07	0.00 0.00 0.35
9	21.04 13.00 0.00	0.81E+06 84.93	0.50 0.46 0.25	-0.10 -0.22 0.00	0.41 0.41 0.25	0.00 0.00 0.43	-0.01 -0.01 0.10	0.00 0.00 0.41
10	21.15 15.00 0.00	0.81E+06 83.24	0.56 0.52 0.25	-0.07 -0.22 0.00	0.47 0.47 0.25	0.00 0.00 0.48	-0.01 -0.01 0.13	0.01 0.01 0.47
11	20.02 17.00 0.00	0.80E+06 88.77	0.63 0.58 0.25	-0.04 -0.23 0.00	0.54 0.54 0.25	0.00 0.00 0.58	0.00 -0.01 0.16	0.01 0.01 0.53
12	20.02 19.00 0.00	0.80E+06 88.21	0.68 0.64 0.25	0.00 -0.23 0.00	0.60 0.60 0.25	0.00 0.00 0.50	-0.01 -0.01 0.20	0.01 0.01 0.60
13	20.01 22.00 0.00	0.80E+06 95.27	0.75 0.71 0.25	0.05 -0.24 0.00	0.68 0.68 0.25	0.00 0.05 0.50	-0.01 -0.01 0.24	0.00 0.00 0.68

PROPULSIVE WING FORCE DATA

SUMMARY, RUN 130

PT	Q ALPHA DELTA	REY NO HEIGHT	CL15 CAF16 CRUC	CD15 CAF16 CRUN	CPM15 CPM16 CRUT	CRM15 CRM16 CLTR	CYM15 CYM16 CDTR	CSF15 CSF16 CNTR
1	10.00 -2.03 0.00	0.50E+06 70.03	0.11 0.12 0.00	-0.41 -0.00 0.00	0.06 0.06 0.50	0.00 0.00 0.00	-0.01 -0.01 0.01	0.00 0.02 0.03
2	10.00 0.07 0.00	0.57E+06 88.02	0.17 0.17 0.51	-0.42 -0.42 0.00	0.00 0.00 0.51	0.00 0.00 0.13	-0.01 -0.01 0.01	0.01 0.01 0.00
3	10.00 1.99 0.00	0.57E+06 88.03	0.22 0.20 0.51	-0.41 -0.41 0.00	0.13 0.12 0.51	0.00 0.00 0.17	-0.01 -0.01 0.02	0.01 0.01 0.12
4	10.50 3.00 0.00	0.57E+06 88.20	0.27 0.25 0.50	-0.39 -0.41 0.00	0.17 0.17 0.50	0.00 0.00 0.21	-0.01 -0.01 0.03	0.02 0.02 0.16
5	10.50 5.01 0.00	0.57E+06 87.20	0.34 0.30 0.50	-0.38 -0.41 0.00	0.22 0.22 0.50	0.00 0.00 0.26	-0.01 -0.01 0.03	0.02 0.02 0.21
6	10.50 6.02 0.00	0.57E+06 88.00	0.41 0.36 0.50	-0.37 -0.42 0.00	0.27 0.27 0.50	0.00 0.00 0.32	-0.01 -0.01 0.04	0.00 0.00 0.25
7	10.50 9.50 0.00	0.57E+06 88.00	0.48 0.41 0.50	-0.36 -0.42 0.00	0.32 0.32 0.50	0.00 0.00 0.37	-0.01 -0.01 0.00	0.01 0.01 0.31
8	10.50 12.00 0.00	0.57E+06 88.11	0.56 0.48 0.50	-0.32 -0.43 0.00	0.37 0.37 0.50	0.00 0.00 0.44	-0.01 -0.01 0.00	0.01 0.01 0.36
9	10.50 14.01 0.00	0.57E+06 88.78	0.63 0.54 0.51	-0.29 -0.44 0.00	0.43 0.43 0.51	0.00 0.00 0.48	-0.01 -0.01 0.11	0.00 0.00 0.42
10	10.50 15.98 0.00	0.57E+06 88.84	0.71 0.61 0.50	-0.25 -0.44 0.00	0.49 0.49 0.50	0.00 0.00 0.56	-0.01 -0.01 0.14	0.02 0.02 0.48
11	10.50 17.97 0.00	0.57E+06 88.78	0.77 0.66 0.50	-0.22 -0.45 0.00	0.55 0.55 0.50	0.00 0.00 0.61	-0.01 -0.01 0.17	0.00 0.00 0.54
12	10.48 19.99 0.00	0.57E+06 88.74	0.85 0.74 0.51	-0.17 -0.45 0.00	0.63 0.63 0.51	-0.01 0.00 0.67	-0.01 -0.01 0.22	0.01 0.01 0.61
13	10.35 22.00 0.00	0.57E+06 88.94	0.92 0.80 0.52	-0.13 -0.46 0.00	0.68 0.68 0.52	0.00 0.00 0.72	-0.01 -0.01 0.26	0.00 0.00 0.68

PROPULSIVE WING FORCE DATA

SUMMARY, RUN 131

PT	Q ALPHA DELTA	REY NO HEIGHT	CL15 CAF16 CRUC	CD15 CAF16 CRUN	CPM15 CPM16 CRUT	CRM15 CRM16 CLTR	CYM15 CYM16 CDTR	CSF15 CSF16 CNTR
1	5.00 -2.00 0.00	0.41E+06 82.56	0.21 0.24 0.00	-0.03 -0.03 0.00	0.00 0.00 0.00	0.00 0.00 0.17	-0.01 -0.01 0.01	0.03 0.03 0.06
2	5.20 0.00 0.00	0.41E+06 80.56	0.27 0.27 1.01	-0.03 -0.03 0.00	0.11 0.11 1.01	0.00 0.00 0.20	-0.01 -0.01 0.01	0.03 0.03 0.00
3	5.20 1.99 0.00	0.41E+06 88.01	0.30 0.27 1.01	-0.03 -0.04 0.00	0.15 0.15 1.01	0.00 0.00 0.20	-0.01 -0.01 0.02	0.00 0.00 0.13
4	5.20 3.00 0.00	0.41E+06 88.08	0.43 0.37 1.02	-0.01 -0.04 0.00	0.20 0.20 1.02	0.00 0.00 0.20	-0.01 -0.01 0.03	0.01 0.01 0.18
5	5.20 5.00 0.00	0.41E+06 88.20	0.48 0.38 1.01	-0.00 -0.04 0.00	0.24 0.24 1.01	-0.01 0.00 0.22	-0.02 -0.02 0.04	0.03 0.03 0.22
6	5.20 7.50 0.00	0.41E+06 88.03	0.50 0.47 1.02	-0.77 -0.04 0.00	0.29 0.29 1.02	-0.01 0.00 0.40	-0.01 -0.01 0.06	0.02 0.02 0.27
7	5.20 9.98 0.00	0.41E+06 88.50	0.06 0.52 1.02	-0.75 -0.05 0.00	0.35 0.35 1.02	-0.01 0.00 0.44	-0.02 -0.02 0.08	0.01 0.01 0.33
8	5.20 11.98 0.00	0.41E+06 88.01	0.70 0.61 1.02	-0.71 -0.05 0.00	0.41 0.41 1.02	-0.01 0.00 0.53	-0.02 -0.02 0.11	0.04 0.04 0.38
9	5.20 14.01 0.00	0.41E+06 88.38	0.80 0.68 1.02	-0.67 -0.06 0.00	0.47 0.47 1.02	-0.01 0.00 0.58	-0.02 -0.02 0.14	0.03 0.03 0.44
10	5.20 16.01 0.00	0.41E+06 84.24	0.90 0.74 1.01	-0.63 -0.07 0.00	0.53 0.53 1.01	-0.01 0.00 0.64	-0.02 -0.02 0.17	0.03 0.03 0.50
11	5.20 18.00 0.00	0.41E+06 85.70	1.03 0.84 1.01	-0.58 -0.07 0.00	0.58 0.58 1.01	-0.01 0.00 0.68	-0.02 -0.03 0.20	0.01 0.01 0.56
12	5.20 19.98 0.00	0.41E+06 80.51	1.14 0.90 1.02	-0.52 -0.08 0.00	0.65 0.65 1.02	-0.01 0.00 0.76	-0.02 -0.02 0.26	0.02 0.02 0.63
13	5.17 22.00 0.00	0.40E+06 87.75	1.23 0.96 1.03	-0.46 -0.01 0.00	0.72 0.72 1.03	-0.01 0.00 0.84	-0.02 -0.03 0.30	0.00 0.00 0.70

PROPULSIVE WING FORCE DATA

SUMMARY, RUN 132

PT	Q ALPHA BETA	REY NO WEIGHT	CL15 CDF15 CNWC	CD15 CAF15 CNWH	CPW15 CPR15 CNWT	CNW15 CNR15 CLTR	CYW15 CYR15 CDTR	CSF15 CSF15 CNTR
45	30.23		-0.01	0.01	-0.01	0.00	0.00	0.01
	-2.04	0.98E+06	-0.01	0.01	-0.01	0.00	0.00	0.01
	0.00	68.72	0.00	0.00	0.00	-0.01	0.01	-0.01
46	30.23		0.00	0.01	0.00	0.00	0.00	0.01
	0.01	0.30E+06	0.00	0.01	0.00	0.00	0.00	0.01
	0.00	84.48	0.00	0.00	0.00	0.00	0.01	0.00
47	30.35		0.00	0.01	0.01	0.00	0.00	0.01
	2.08	0.98E+06	0.00	0.01	0.01	0.00	0.00	0.01
	0.00	87.54	0.00	0.00	0.00	0.00	0.01	0.01
48	30.35		0.00	0.01	0.02	0.00	0.00	0.01
	4.08	3.98E+06	0.00	0.01	0.02	0.00	0.00	0.01
	0.00	83.48	0.00	0.00	0.00	0.00	0.01	0.02
49	30.23		0.01	0.01	0.03	0.00	0.00	0.01
	6.00	0.98E+06	0.01	0.01	0.03	0.00	0.00	0.01
	0.00	85.70	0.00	0.00	0.00	0.01	0.01	0.03
50	30.48		0.02	0.01	0.04	0.00	0.00	0.01
	8.02	0.98E+06	0.02	0.01	0.04	0.00	0.00	0.01
	0.00	85.82	0.00	0.00	0.00	0.02	0.01	0.04
51	30.35		0.02	0.01	0.05	0.00	0.00	0.01
	10.01	0.98E+06	0.02	0.01	0.05	0.00	0.00	0.01
	0.00	85.20	0.00	0.00	0.00	0.02	0.01	0.05
52	30.23		0.02	0.01	0.06	0.00	0.00	0.00
	12.01	0.98E+06	0.03	0.01	0.06	0.00	0.00	0.00
	0.00	85.64	0.00	0.00	0.00	0.02	0.01	0.06
53	30.23		0.03	0.01	0.07	0.00	0.00	0.00
	14.03	0.98E+06	0.03	0.01	0.07	0.00	0.00	0.00
	0.00	83.48	0.00	0.00	0.00	0.03	0.01	0.07
54	30.35		0.04	0.02	0.08	0.00	0.00	0.00
	16.01	0.98E+06	0.04	0.01	0.08	0.00	0.00	0.00
	0.00	85.41	0.00	0.00	0.00	0.04	0.02	0.08
55	30.35		0.04	0.02	0.09	0.00	0.00	0.01
	18.02	0.98E+06	0.05	0.01	0.09	0.00	0.00	0.01
	0.00	85.15	0.00	0.00	0.00	0.04	0.02	0.08
56	30.35		0.05	0.03	0.10	0.00	0.00	0.00
	20.07	0.98E+06	0.06	0.01	0.10	0.00	0.00	0.00
	0.00	80.43	0.00	0.00	0.00	0.05	0.03	0.10
57	30.35		0.06	0.03	0.11	0.00	0.00	0.00
	22.00	0.98E+06	0.07	0.01	0.11	0.00	0.00	0.00
	0.00	87.41	0.00	0.00	0.00	0.06	0.03	0.11

PROPULSIVE WING FORCE DATA

SUMMARY, RUN 133

PT	Q ALPHA BETA	REY NO WEIGHT	CL15 CNF15 CNWC	CD15 CAF15 CNWH	CPW15 CPR15 CNWT	CNW15 CNR15 CLTR	CYW15 CYR15 CDTR	CSF15 CSF15 CNTR
1	30.23		-0.02	0.01	0.00	-0.01	-0.04	-0.14
	-0.01	0.95E+06	-0.02	0.01	0.00	-0.01	-0.04	-0.14
	15.01	68.71	0.00	0.00	0.00	-0.02	0.01	0.00
2	30.35		-0.01	0.01	0.00	-0.01	-0.03	-0.08
	-0.01	0.95E+06	-0.01	0.01	0.00	-0.01	-0.03	-0.08
	10.00	68.71	0.00	0.00	0.00	-0.01	0.01	0.00
3	30.48		0.00	0.01	0.00	-0.01	-0.02	-0.07
	-0.01	0.95E+06	0.00	0.01	0.00	-0.01	-0.02	-0.07
	8.00	68.71	0.00	0.00	0.00	0.00	0.01	0.00
4	30.48		-0.01	0.01	0.00	0.00	-0.02	-0.04
	0.00	0.95E+06	-0.01	0.01	0.00	0.00	-0.02	-0.04
	6.00	68.71	0.00	0.00	0.00	-0.01	0.01	0.00
5	30.12		-0.01	0.01	0.00	0.00	-0.01	-0.03
	0.00	0.95E+06	-0.01	0.01	0.00	0.00	-0.01	-0.03
	4.00	68.71	0.00	0.00	0.00	-0.01	0.01	0.00
6	30.23		0.00	0.01	0.00	0.00	-0.01	-0.01
	-[illegible]	0.95E+06	0.00	0.01	0.00	0.00	-0.01	-0.01
	1.00	68.71	0.00	0.00	0.00	0.00	0.01	0.00
7	30.12		0.00	0.01	0.00	0.00	0.00	0.01
	0.00	0.95E+06	0.00	0.01	0.00	0.00	0.00	0.01
	0.00	68.71	0.00	0.00	0.00	0.00	0.01	0.00
8	30.00		0.00	0.01	0.00	0.00	0.00	0.03
	0.01	0.95E+06	0.00	0.01	0.00	0.00	0.00	0.03
	-2.03	68.71	0.00	0.00	0.00	0.00	0.01	0.00
9	30.12		-0.01	0.01	0.00	0.00	0.01	0.04
	0.01	0.95E+06	-0.01	0.01	0.00	0.00	0.01	0.04
	-4.01	68.71	0.00	0.00	0.00	-0.01	0.01	0.00
10	30.00		-0.01	0.01	0.00	0.01	0.02	0.06
	0.01	0.95E+06	-0.01	0.01	0.00	0.01	0.02	0.06
	-6.02	68.71	0.00	0.00	0.00	-0.01	0.01	0.00
11	30.00		0.00	0.01	0.00	0.01	0.02	0.08
	0.01	0.95E+06	0.00	0.01	0.00	0.01	0.02	0.08
	-8.01	68.71	0.00	0.00	0.00	0.00	0.01	0.00
12	30.00		0.00	0.01	0.00	0.01	0.03	0.10
	0.01	0.95E+06	0.00	0.01	0.00	0.01	0.03	0.10
	-10.02	68.71	0.00	0.00	0.00	0.00	0.01	0.00
13	29.88		-0.01	0.00	0.00	0.01	0.04	0.15
	0.02	0.95E+06	-0.01	0.00	0.00	0.01	0.04	0.15
	-15.01	68.71	0.00	0.00	0.00	-0.01	0.00	0.00

PROPULSIVE WING FORCE DATA

SUMMARY, RUN 134

PT	Q ALPHA BETA	REY NO HEIGHT	CL1S CRF1B CPDC	CD1S CAF1B CRUN	CPM1S CPM1B CMUT	CRM1S CRM1B CLTR	CYM1S CYM1B CDTR	CSF1S CSF1B CNTR
1	30.00		0.00	0.01	0.00	0.00	-0.02	-0.04
	0.00	0.98E+06	0.00	0.01	0.00	0.00	-0.02	-0.04
	5.01	88.71	0.00	0.00	0.00	0.00	0.01	0.00
2	30.12		-0.01	0.01	-0.01	0.00	-0.02	-0.03
	-2.01	0.95E+06	-0.01	0.01	-0.01	0.00	-0.02	-0.03
	5.01	87.04	0.00	0.00	0.00	-0.01	0.01	-0.01
3	30.35		0.01	0.01	0.01	0.00	-0.02	-0.03
	2.00	0.94E+06	0.01	0.01	0.01	0.00	-0.02	-0.03
	5.01	88.53	0.00	0.00	0.00	0.01	0.01	0.01
4	30.23		0.01	0.01	0.02	0.00	-0.02	-0.04
	4.00	0.95E+06	0.01	0.01	0.02	0.00	-0.02	-0.04
	5.01	88.44	0.00	0.00	0.00	0.01	0.01	0.02
5	30.35		0.01	0.01	0.03	0.00	-0.02	-0.04
	6.00	0.96E+06	0.01	0.01	0.03	0.00	-0.02	-0.04
	5.01	88.48	0.00	0.00	0.00	0.01	0.01	0.03
6	30.23		0.02	0.01	0.04	0.00	-0.02	-0.04
	6.00	0.95E+06	0.02	0.01	0.04	0.00	-0.02	-0.04
	5.01	83.84	0.00	0.00	0.00	0.02	0.01	0.04
7	30.35		0.03	0.01	0.05	0.00	-0.02	-0.05
	10.01	0.98E+06	0.03	0.01	0.05	0.00	-0.02	-0.05
	5.01	84.41	0.00	0.00	0.00	0.03	0.01	0.05
8	30.23		0.03	0.01	0.06	0.00	-0.02	-0.05
	12.00	0.95E+06	0.03	0.01	0.06	0.00	-0.02	-0.05
	5.01	86.00	0.00	0.00	0.00	0.03	0.01	0.06
9	30.35		0.03	0.02	0.07	0.00	-0.02	-0.05
	14.00	0.96E+06	0.04	0.01	0.07	0.00	-0.02	-0.05
	5.01	85.37	0.00	0.00	0.00	0.03	0.02	0.07
10	30.35		0.04	0.02	0.08	0.00	-0.03	-0.05
	16.04	0.98E+06	0.05	0.01	0.08	0.00	-0.03	-0.05
	5.01	85.85	0.00	0.00	0.00	0.04	0.02	0.08
11	30.35		0.04	0.02	0.09	0.00	-0.03	-0.06
	18.06	0.98E+06	0.05	0.01	0.09	0.01	-0.03	-0.06
	5.01	86.03	0.00	0.00	0.00	0.04	0.02	0.09
12	30.35		0.06	0.03	0.10	0.00	-0.04	-0.08
	20.04	0.98E+06	0.06	0.01	0.10	0.01	-0.04	-0.08
	5.01	90.29	0.00	0.00	0.00	0.06	0.03	0.10
13	30.23		0.06	0.03	0.10	0.00	-0.04	-0.08
	22.06	0.95E+06	0.07	0.01	0.10	0.01	-0.04	-0.08
	5.01	97.84	0.00	0.00	0.00	0.06	0.03	0.10

PROPULSIVE WING FORCE DATA

SUMMARY, RUN 135

PT	Q ALPHA BETA	REY NO HEIGHT	CL1S CRF1B CPDC	CD1S CAF1B CRUN	CPM1S CPM1B CMUT	CRM1S CRM1B CLTR	CYM1S CYM1B CDTR	CSF1S CSF1B CNTR
3	30.35		0.00	0.01	-0.01	0.00	0.00	0.00
	-2.01	0.98E+06	0.00	0.01	-0.01	0.00	0.00	0.00
	0.00	88.00	0.00	0.00	0.00	0.00	0.01	-0.01
4	30.35		-0.01	0.01	0.00	0.00	0.00	0.00
	0.01	0.98E+06	-0.01	0.01	0.00	0.00	0.00	0.00
	0.00	85.72	0.00	0.00	0.00	-0.01	0.01	0.00
5	30.35		0.00	0.01	0.01	0.00	0.00	0.00
	2.01	0.98E+06	0.00	0.01	0.01	0.00	0.00	0.00
	-0.01	85.27	0.00	0.00	0.00	0.00	0.01	0.01
6	30.48		0.01	0.01	0.02	0.00	0.00	0.00
	4.02	0.98E+06	0.01	0.00	0.02	0.00	0.00	0.00
	-0.01	84.31	0.00	0.00	0.00	0.01	0.01	0.02
7	30.35		0.01	0.01	0.03	0.00	0.00	0.00
	6.03	0.98E+06	0.01	0.01	0.03	0.00	0.00	0.00
	-0.01	88.31	0.00	0.00	0.00	0.01	0.01	0.03
8	30.48		0.01	0.00	0.04	0.00	0.00	0.00
	8.01	0.98E+06	0.01	0.00	0.04	0.00	0.00	0.00
	-0.01	88.46	0.00	0.00	0.00	0.01	0.00	0.04
9	30.35		0.02	0.01	0.05	0.00	0.00	-0.01
	10.03	0.98E+06	0.02	0.00	0.05	0.00	0.00	-0.01
	-0.01	82.01	0.00	0.00	0.00	0.02	0.01	0.00
10	30.35		0.03	0.01	0.06	0.00	0.00	0.00
	12.02	0.98E+06	0.03	0.00	0.06	0.00	0.00	0.00
	-0.01	84.06	0.00	0.00	0.00	0.03	0.01	0.06
11	30.35		0.03	0.01	0.07	0.00	0.00	-0.01
	14.06	0.98E+06	0.03	0.00	0.07	0.00	0.00	-0.01
	-0.01	85.51	0.00	0.00	0.00	0.03	0.01	0.07
12	30.00		0.04	0.01	0.08	0.00	0.00	-0.01
	16.06	0.95E+06	0.04	0.00	0.08	0.00	0.00	-0.01
	-0.01	85.98	0.00	0.00	0.00	0.04	0.01	0.08
13	30.00		0.05	0.01	0.08	0.00	0.00	0.00
	18.01	0.95E+06	0.05	0.00	0.08	0.00	0.00	0.00
	-0.01	85.28	0.00	0.00	0.00	0.05	0.01	0.08
14	30.00		0.06	0.02	0.10	0.00	0.00	0.00
	20.05	0.95E+06	0.06	0.00	0.10	0.00	0.00	0.00
	-0.01	90.44	0.00	0.00	0.00	0.06	0.02	0.10
15	30.00		0.06	0.02	0.11	0.00	0.00	0.00
	22.01	0.95E+06	0.06	0.00	0.11	0.00	0.00	0.00
	-0.01	97.53	0.00	0.00	0.00	0.06	0.02	0.11

PROPULSIVE WING FORCE DATA

SUMMARY. RUN 136

PT	Q ALPHA BETA	REY NO HEIGHT	CL1S CNF1B CNUC	CD1S CAF1B CNWH	CPN1S CPN1B CNUT	CNN1S CNN1B CLTR	CYN1S CYN1B CDTR	CSF1S CSF1B CNTR
1	28.88		-0.01	0.01	-0.01	0.00	-0.02	-0.01
	-2.01	0.95E+06	-0.01	0.01	-0.01	0.00	-0.02	-0.01
	5.01	86.82	0.00	0.00	0.00	-0.01	0.01	-0.01
2	30.12		0.00	0.01	0.00	0.00	-0.02	-0.01
	-0.02	0.95E+06	0.00	0.01	0.00	0.00	-0.02	-0.01
	5.01	85.00	0.00	0.00	0.00	0.00	0.01	0.00
3	30.23		0.00	0.01	0.01	0.00	-0.02	-0.01
	2.01	0.95E+06	0.00	0.01	0.01	0.00	-0.02	-0.01
	5.01	83.68	0.00	0.00	0.00	0.00	0.01	0.01
4	30.23		0.01	0.01	0.02	0.00	-0.02	-0.01
	4.02	0.95E+06	0.01	0.01	0.02	0.00	-0.02	-0.01
	5.01	88.22	0.00	0.00	0.00	0.01	0.01	0.0[illegible]
5	30.23		0.01	0.00	0.03	0.00	-0.02	-0.02
	6.00	0.95E+06	0.01	0.00	0.03	0.00	-0.02	-0.02
	5.01	88.35	0.00	0.00	0.00	0.01	0.00	0.03
6	30.23		0.01	0.00	0.04	0.00	-0.02	-0.03
	8.04	0.95E+06	0.01	0.00	0.04	0.00	-0.02	-0.03
	5.01	84.53	0.00	0.00	0.00	0.01	0.00	0.04
7	30.12		0.02	0.01	0.05	0.00	-0.02	-0.03
	10.00	0.95E+06	0.02	0.00	0.05	0.00	-0.02	-0.03
	5.01	84.31	0.00	0.00	0.00	0.02	0.01	0.05
8	30.12		0.02	0.01	0.06	0.00	-0.02	-0.05
	12.01	0.[illegible]+06	0.02	0.00	0.06	0.00	-0.02	-0.05
	5.01	86.51	0.00	0.00	0.00	0.02	0.01	0.06
9	30.12		0.03	0.01	0.07	0.00	-0.02	-0.07
	13.99	0.95E+06	0.03	0.00	0.07	0.00	-0.02	-0.07
	5.00	88.37	0.00	0.00	0.00	0.03	0.01	0.07
10	30.12		0.03	0.01	0.07	0.00	-0.02	-0.08
	16.01	0.95E+06	0.03	0.00	0.07	0.00	-0.02	-0.08
	5.00	88.53	0.00	0.00	0.00	0.03	0.01	0.07
11	30.23		0.05	0.02	0.09	0.00	-0.02	-0.10
	18.04	0.95E+06	0.05	0.00	0.09	0.00	-0.02	-0.10
	5.00	85.58	0.00	0.00	0.00	0.05	0.02	0.08
12	30.23		0.06	0.02	0.10	0.00	-0.02	-0.12
	20.01	0.95E+06	0.07	0.00	0.10	0.00	-0.02	-0.12
	5.00	90.25	0.00	0.00	0.00	0.06	0.02	0.10
13	30.12		0.07	0.03	0.10	-0.01	-0.02	-0.14
	22.00	0.95E+06	0.07	0.00	0.10	0.00	-0.02	-0.14
	5.00	97.53	0.00	0.00	0.00	0.07	0.03	0.10

PROPULSIVE WING FORCE DATA

SUMMARY. RUN 137

PT	Q ALPHA BETA	REY NO HEIGHT	CL1S CNF1B CNUC	CD1S CAF1B CNWH	CPN1S CPN1B CNUT	CNN1S CNN1B CLTR	CYN1S CYN1B CDTR	CSF1S CSF1B CNTR
1	28.77		0.00	0.00	0.02	0.00	-0.07	-0.07
	5.02	0.95E+06	0.00	0.01	0.02	0.00	-0.07	-0.07
	15.02	88.34	0.00	0.00	0.00	0.00	0.00	0.02
2	30.00		0.00	0.01	0.02	0.00	-0.05	-0.04
	5.02	0.95E+06	0.00	0.00	0.02	0.00	-0.05	-0.04
	10.01	88.34	0.00	0.0[illegible]	0.00	0.00	0.01	0.02
3	30.12		0.01	0.01	0.02	0.00	-0.04	-0.03
	5.02	0.95E+06	0.01	0.00	0.02	0.00	-0.04	-0.03
	8.00	88.34	0.00	0.00	0.00	0.01	0.01	0.02
4	30.12		0.01	0.01	0.02	0.00	-0.03	-0.02
	5.03	0.95E+06	0.01	0.01	0.02	0.00	-0.03	-0.02
	8.01	88.34	0.00	0.00	0.00	0.01	0.01	0.02
5	30.12		0.01	0.01	0.02	0.00	-0.02	-0.01
	5.03	0.95E+06	0.01	0.01	0.02	0.00	-0.02	-0.01
	3.98	88.34	0.00	0.00	0.00	0.01	0.01	0.02
6	30.00		0.01	0.01	0.03	0.00	-0.01	-0.01
	5.03	0.95E+06	0.01	0.00	0.02	0.00	-0.01	-0.01
	2.01	88.34	0.00	0.00	0.00	0.01	0.01	0.03
7	30.12		0.00	0.00	0.02	0.00	0.00	-0.01
	5.03	0.95E+06	0.00	0.00	0.02	0.00	0.00	-0.01
	0.00	88.34	0.00	0.00	0.00	0.00	0.00	0.02

PROPULSIVE WING FORCE DATA

SUMMARY, RUN 138

PT	Q ALPHA BETA	REY NO HEIGHT	CL1S CNF1B CNUC	CD1S CAF1B CNUN	CPM1S CPM1B CNUT	CMM1S CMM1B CLTR	CYM1S CYM1B CDTR	CSF1S CSF1B CNTR
1	29.88		-0.02	0.01	0.00	0.00	-0.07	-0.05
	-0.03	0.95E+06	-0.02	0.01	0.00	0.00	-0.07	-0.05
	15.00	88.58	0.00	0.00	0.00	-0.02	0.01	0.00
2	29.88		0.00	0.01	0.00	0.00	-0.05	-0.03
	-0.02	0.95E+06	0.00	0.01	0.00	0.00	-0.05	-0.03
	10.03	88.58	0.00	0.00	0.00	0.00	0.01	0.00
3	30.00		-0.01	0.01	0.00	0.00	-0.04	-0.02
	-0.02	0.95E+06	-0.01	0.01	0.00	0.00	-0.04	-0.02
	6.00	88.58	0.00	0.00	0.00	-0.01	0.01	0.00
4	30.00		-0.01	0.01	0.00	0.00	-0.03	-0.01
	-0.01	0.95E+06	-0.01	0.01	0.00	0.00	-0.03	-0.01
	6.01	88.58	0.00	0.00	0.00	-0.01	0.01	0.00
5	30.00		-0.01	0.01	0.00	0.00	-0.02	-0.01
	-0.01	0.95E+06	-0.01	0.01	0.00	0.00	-0.02	-0.01
	4.00	88.58	0.00	0.00	0.00	-0.01	0.01	0.00
6	30.00		-0.01	0.01	0.00	0.00	-0.01	0.00
	-0.01	0.95E+06	-0.01	0.01	0.00	0.00	-0.01	0.00
	2.00	88.58	0.00	0.00	0.00	-0.01	0.01	0.00
7	29.88		-0.01	0.01	0.00	0.00	0.00	0.00
	-0.01	0.95E+06	-0.01	0.01	0.00	0.00	0.00	0.00
	0.00	88.58	0.00	0.00	0.00	-0.01	0.01	0.00
8	30.00		0.00	0.01	0.00	0.00	0.01	0.00
	-0.01	0.95E+06	0.00	0.01	0.00	0.00	0.01	0.00
	-2.00	88.58	0.00	0.00	0.00	0.00	0.01	0.00
9	30.00		0.00	0.01	0.00	0.00	0.02	0.00
	-0.01	0.95E+06	0.00	0.01	0.00	0.00	0.02	0.00
	-4.00	88.58	0.00	0.00	0.00	0.00	0.01	0.00
10	29.77		-0.01	0.01	0.00	0.00	0.03	0.01
	0.00	0.95E+06	-0.01	0.01	0.00	0.00	0.03	0.01
	-6.00	88.58	0.00	0.00	0.00	-0.01	0.01	0.00
11	29.88		-0.01	0.01	0.00	0.00	0.04	0.01
	0.00	0.95E+06	-0.01	0.01	0.00	0.00	0.04	0.01
	-8.00	88.58	0.00	0.00	0.00	-0.01	0.01	0.00
12	29.88		0.00	0.01	0.00	0.00	0.05	0.03
	0.00	0.95E+06	0.00	0.01	0.00	0.00	0.05	0.03
	-10.00	88.58	0.00	0.00	0.00	0.00	0.01	0.00
13	29.77		-0.01	0.01	0.00	0.00	0.08	0.05
	0.01	0.95E+06	-0.01	0.01	0.00	0.00	0.08	0.05
	-15.00	88.58	0.00	0.00	0.00	-0.01	0.01	0.00

PROPULSIVE WING FORCE DATA

SUMMARY, RUN 139

PT	Q ALPHA BETA	REY NO HEIGHT	CL1S CNF1B CNUC	CD1S CAF1B CNUN	CPM1S CPM1B CNUT	CMM1S CMM1B CLTR	CYM1S CYM1B CDTR	CSF1S CSF1B CNTR
15	0.00		25.43	-14.87	-872.40	-12.79	-18.54	0.21
	-0.05	0.00E+00	25.44	-14.84	-872.40	-12.81	-18.52	0.21
	0.00	87.18	0.00	0.00	0.00	25.43	-14.87	-872.40
16	0.00		40.58	-28.78	-1402.00	-18.07	-15.44	-0.57
	-0.08	0.00E+00	40.59	-28.73	-1402.00	-18.09	-15.41	-0.57
	0.00	87.18	0.00	0.00	0.00	40.58	-28.79	-1402.00
17	0.00		82.94	-40.89	-2125.00	-22.84	-18.14	-0.23
	-0.13	0.00E+00	83.03	-40.75	-2125.00	-22.88	-18.09	-0.23
	0.00	87.18	0.00	0.00	0.00	82.94	-40.89	-2125.00
18	0.00		82.99	-56.15	-2883.00	-37.87	-33.88	0.42
	-0.17	0.00E+00	83.15	-55.90	-2883.00	-37.77	-33.58	0.42
	0.00	87.18	0.00	0.00	0.00	82.99	-56.15	-2883.00
19	0.00		106.70	-72.28	-3680.00	-53.36	-38.02	-0.33
	-0.23	0.00E+00	107.00	-71.84	-3680.00	-53.51	-37.81	-0.33
	0.00	87.18	0.00	0.00	0.00	106.70	-72.28	-3680.00

PROPULSIVE WING FORCE DATA

SUMMARY, RUN 142

PT	Q ALPHA BETA	REY NO HEIGHT	CL1S CAF1B CNUC	CD1S CAF1B CNUH	CPM1S CPM1B CNUT	CRM1S CRM1B CLTR	CYM1S CYM1B CBTR	CSF1S CSF1B CNTR
1	0.00		30.15	-22.04	-1168.00	-58.73	-87.00	0.10
	-0.08	0.30E+06	30.17	-22.01	-1168.00	-58.83	-87.73	0.10
	0.00	88.12	0.00	0.00	0.00	30.15	-22.04	-1168.00
2	0.00		47.84	-34.85	-1702.00	-74.15	-100.70	-0.30
	-0.10	0.30E+06	47.90	-34.77	-1702.00	-74.33	-100.80	-0.30
	0.00	88.12	0.00	0.00	0.00	47.84	-34.85	-1702.00
3	0.00		85.15	-48.29	-2358.00	-37.70	2.85	0.04
	-0.14	0.30E+06	85.27	-48.13	-2358.00	-37.78	2.84	0.04
	0.00	88.12	0.00	0.00	0.00	85.15	-48.29	-2358.00
4	0.00		88.00	-83.78	-3131.00	-57.25	-3.48	-0.44
	-0.19	0.30E+06	88.02	-83.48	-3131.00	-57.28	-3.26	-0.44
	0.00	88.12	0.00	0.00	0.00	88.00	-83.78	-3131.00
5	0.00		114.70	-78.81	-3000.00	-71.10	-23.80	0.46
	-0.24	0.30E+06	115.00	-78.42	-3000.00	-71.20	-23.50	0.46
	0.00	88.12	0.00	0.00	0.00	114.70	-78.81	-3000.00

PROPULSIVE WING FORCE DATA

SUMMARY, RUN 143

PT	Q ALPHA BETA	REY NO HEIGHT	CL1S CAF1B CNUC	CD1S CAF1B CNUH	CPM1S CPM1B CNUT	CRM1S CRM1B CLTR	CYM1S CYM1B CBTR	CSF1S CSF1B CNTR
2	30.12		0.38	0.11	-0.36	0.00	-0.02	-0.02
	-2.14	0.98E+06	0.37	0.12	-0.36	0.00	-0.02	-0.02
	5.00	87.08	0.00	0.00	0.00	0.38	0.11	-0.36
3	30.35		0.47	0.12	-0.39	0.00	-0.02	-0.01
	-0.06	0.98E+06	0.47	0.12	-0.39	0.00	-0.02	-0.01
	5.00	83.19	0.00	0.00	0.00	0.47	0.12	-0.39
4	30.00		0.55	0.14	-0.42	0.00	-0.02	-0.02
	2.06	0.97E+06	0.55	0.12	-0.42	0.00	-0.02	-0.02
	5.00	88.15	0.00	0.00	0.00	0.55	0.14	-0.42
5	29.88		0.64	0.15	-0.46	0.00	-0.02	-0.02
	4.03	0.97E+06	0.65	0.11	-0.46	0.00	-0.02	-0.02
	5.00	85.85	0.00	0.00	0.00	0.64	0.15	-0.46
6	30.00		0.64	0.15	-0.46	0.00	-0.02	-0.02
	4.03	0.97E+06	0.65	0.11	-0.46	0.00	-0.02	-0.02
	5.00	85.85	0.00	0.00	0.00	0.64	0.15	-0.46
7	30.12		0.73	0.17	-0.49	0.00	-0.02	-0.03
	6.01	0.98E+06	0.74	0.10	-0.49	0.00	-0.02	-0.03
	5.00	84.54	0.00	0.00	0.00	0.73	0.17	-0.49
8	30.00		0.82	0.20	-0.54	0.00	-0.02	-0.03
	8.01	0.97E+06	0.85	0.00	-0.54	0.00	-0.02	-0.03
	5.00	86.31	0.00	0.00	0.00	0.82	0.20	-0.54
9	30.00		0.93	0.24	-0.58	0.00	-0.02	-0.04
	10.05	0.97E+06	0.96	0.07	-0.58	0.00	-0.02	-0.04
	5.00	85.92	0.00	0.00	0.00	0.93	0.24	-0.58
10	29.88		1.04	0.30	-0.64	0.00	-0.02	-0.04
	12.10	0.97E+06	1.08	0.07	-0.64	0.00	-0.02	-0.04
	5.00	86.52	0.00	0.00	0.00	1.04	0.30	-0.64
11	30.00		1.10	0.35	-0.67	-0.01	-0.02	-0.05
	14.05	0.97E+06	1.15	0.07	-0.67	0.00	-0.02	-0.05
	5.00	83.81	0.00	0.00	0.00	1.10	0.35	-0.67
12	29.77		1.16	0.42	-0.68	-0.01	-0.02	-0.07
	16.02	0.97E+06	1.21	0.08	-0.68	0.00	-0.02	-0.07
	5.00	88.37	0.00	0.00	0.00	1.16	0.42	-0.68
13	29.77		1.15	0.48	-0.71	-0.01	-0.01	-0.08
	18.07	0.97E+06	1.24	0.10	-0.71	0.00	-0.02	-0.08
	5.00	87.41	0.00	0.00	0.00	1.15	0.48	-0.71
14	29.88		1.14	0.54	-0.70	-0.02	-0.01	-0.08
	20.15	0.97E+06	1.25	0.12	-0.70	-0.02	-0.02	-0.08
	5.00	92.36	0.00	0.00	0.00	1.14	0.54	-0.70
15	29.88		1.11	0.58	-0.68	-0.02	-0.01	-0.07
	22.11	0.97E+06	1.25	0.12	-0.68	-0.02	-0.02	-0.07
	5.00	98.53	0.00	0.00	0.00	1.11	0.58	-0.68

PROPULSIVE WING FORCE DATA

SUMMARY, RUN 144

PT	Q ALPHA BETA	REY NO HEIGHT	CL15 CAF16 CNUC	CD15 CAF16 CNUN	CPM15 CPM16 CMUT	CBM15 CBM16 CLTR	CYM15 CYM16 CDTR	CS/15 CS/16 CNTR
2	0.00		1.00	0.14	4.44	1.05	-0.52	1.61
	0.00	0.30E+06	1.00	0.14	4.44	1.05	-0.52	1.61
	0.00	90.54	0.00	0.00	0.00	1.00	0.14	4.44
3	0.00		22.02	-22.53	-868.40	-24.54	-24.16	-0.71
	-0.06	0.30E+06	22.05	-22.48	-868.40	-24.57	-24.13	-0.71
	0.00	90.54	0.00	10.06	10.06	22.02	-22.53	-868.40
4	0.00		71.43	-48.35	-1917.00	-55.00	-48.07	-0.00
	-0.10	0.30E+06	71.56	-48.15	-1917.00	-55.03	-48.52	-0.00
	0.00	90.54	0.00	05.50	05.50	71.43	-48.35	-1917.00
5	0.00		94.00	-63.57	-2500.00	-74.21	-50.00	-0.35
	-0.21	0.30E+06	94.23	-63.23	-2500.00	-74.42	-50.02	-0.35
	0.00	90.54	0.00	04.27	04.27	04.00	-63.57	-2500.00
6	0.00		114.00	-77.03	-3007.00	-00.04	-70.13	1.33
	-0.25	0.30E+06	115.30	-77.42	-3007.00	-01.10	-77.74	1.33
	0.00	90.54	0.00	120.40	120.40	114.00	-77.03	-3007.00

PROPULSIVE WING FORCE DATA

SUMMARY, RUN 145

PT	Q ALPHA BETA	REY NO HEIGHT	CL15 CAF16 CNUC	CD15 CAF16 CNUN	CPM15 CPM16 CMUT	CBM15 CBM16 CLTR	CYM15 CYM16 CDTR	CS/15 CS/16 CNTR
18	0.00		0.70	0.31	-5.07	1.40	-1.35	0.00
	-0.02	0.30E+06	0.70	0.31	-5.07	1.40	-1.35	0.00
	0.00	00.07	0.00	0.00	0.00	0.70	0.31	-5.07
19	0.00		15.30	-8.02	-302.30	-10.01	-20.50	1.74
	-0.03	0.30E+06	15.31	-8.01	-302.30	-10.02	-20.50	1.74
	0.00	00.07	0.00	0.00	0.00	15.30	-8.02	-302.30
20	0.00		34.05	-21.07	-053.50	-21.03	-31.05	1.00
	-0.06	0.30E+06	34.07	-21.03	-053.50	-21.06	-31.03	1.00
	0.00	00.07	0.00	0.00	0.00	34.05	-21.07	-053.50
21	0.00		44.00	-29.07	-1101.00	-32.20	-43.01	2.10
	-0.07	0.30E+06	44.02	-29.52	-1101.00	-32.25	-43.77	2.10
	0.00	00.07	0.00	0.00	0.00	44.00	-29.07	-1101.00
22	0.00		57.20	-37.50	-1400.00	-30.50	-32.25	-0.00
	-0.00	0.30E+06	57.31	-37.47	-1400.00	-30.01	-32.10	-0.00
	0.00	00.07	0.00	0.00	0.00	57.20	-37.50	-1400.00
23	0.00		07.37	-44.00	-1777.00	-50.10	-40.10	0.20
	-0.10	0.30E+06	07.45	-44.73	-1777.00	-50.27	-40.07	0.20
	0.00	00.07	0.00	0.00	0.00	07.37	-44.00	-1777.00

PROPULSIVE WING FORCE DATA

SUMMARY, RUN 146

PT	Q ALPHA BETA	KEY RP HEIGHT	CL15 CAF15 CNRC	CD15 CAF15 CNRA	CPM15 CPM15 CNRT	CBM15 CBM15 CLTR	CYM15 CYM15 CDTR	CSF15 CSF15 CNTR
2	0.00		-1.00	0.10	14.45	-1.77	-0.44	0.34
	-0.02	0.30E+00	-1.00	0.10	14.45	-1.78	-0.44	0.34
	0.00	91.52	0.00	0.34	0.34	-1.00	0.10	14.45
3	0.00		33.00	-17.14	-334.40	-20.30	-11.17	-0.72
	-0.05	0.30E+00	33.00	-17.12	-334.40	-20.30	-11.15	-0.72
	0.00	91.52	0.00	30.75	30.75	33.00	-17.14	-334.40
4	0.00		30.30	-30.00-1070.00		-34.70	-15.00	-1.46
	-0.07	0.30E+00	30.30	-30.00-1070.00		-34.00	-15.00	-1.46
	0.00	91.52	0.00	57.57	57.57	30.35	-30.00-1070.00	
5	0.00		57.00	-42.35-1502.00		-51.50	-31.44	-1.00
	-0.10	0.30E+00	57.73	-42.70-1502.00		-51.95	-31.30	-1.00
	0.00	91.52	0.00	80.17	80.17	57.00	-42.35-1502.00	
6	0.00		81.01	-56.00-2150.00		-71.00	-41.22	-2.24
	-0.13	0.30E+00	81.14	-57.02-2150.00		-71.17	-41.00	-2.24
	0.00	91.52	0.00	116.20	116.20	81.01	-56.00-2150.00	
7	0.00		105.70	-73.53-2001.00		-86.00	-46.72	-2.00
	-0.16	0.30E+00	105.00	-73.24-2001.00		-86.70	-46.44	-2.00
	0.00	91.52	0.00	146.50	146.50	105.70	-73.53-2021.00	

PROPULSIVE WING FORCE DATA

SUMMARY, RUN 147

PT	Q ALPHA BETA	KEY RP HEIGHT	CL15 CAF15 CNRC	CD15 CAF15 CNRA	CPM15 CPM15 CNRT	CBM15 CBM15 CLTR	CYM15 CYM15 CDTR	CSF15 CSF15 CNTR
2	0.00		-5.00	-0.34	-52.01	-0.10	0.52	-1.50
	-0.04	0.30E+00	-5.00	-0.35	-52.01	-0.20	0.52	-1.50
	0.00	94.83	0.00	0.37	0.37	-5.00	-0.34	-52.01
3	0.00		34.01	-25.50	-330.70	-33.00	-30.30	1.20
	-0.08	0.30E+00	34.00	-25.53	-330.70	-33.05	-30.20	1.20
	0.00	94.83	0.00	50.03	50.03	34.01	-25.50	-330.70
4	0.00		80.72	-55.70-2110.50		-60.04	-73.40	1.04
	-0.14	0.30E+00	80.80	-55.51-2110.00		-60.00	-73.22	1.04
	0.00	94.83	0.00	111.00	111.00	80.72	-55.70-2110.00	
5	0.00		107.00	-72.21-2707.00		-84.40	-77.00	1.00
	-0.17	0.30E+00	106.10	-71.00-2707.00		-84.71	-77.70	1.00
	0.00	94.83	0.00	142.00	142.50	107.00	-72.21-2707.00	
6	0.00		115.20	-78.70-2001.00		-88.01	-80.20	-0.00
	-0.18	0.30E+00	115.50	-78.42-2001.00		-88.01	-80.01	-0.00
	0.00	94.83	0.00	152.10	152.10	115.20	-78.70-2001.00	

PROPULSIVE WING FORCE DATA

SUMMARY, RUN 140

PT	Q ALPHA DELTA	REY NO HEIGHT	CL15 CDF15 CDWC	CD15 CDF15 CDWN	CPW15 CPW15 CDWT	CDW15 CDW15 CLTR	CYW15 CYW15 CDTR	CDF15 CDF15 CNTR
2	30.12 -1.00 0.00	0.94E+06 63.21	0.30 0.27 0.00	0.11 0.12 0.00	-0.20 -0.20 0.00	0.00 0.00 0.26	0.00 0.00 0.13	0.00 0.00 -0.26
3	30.00 -0.01 0.00	0.93E+06 59.08	0.40 0.40 0.00	0.12 0.12 0.00	-0.20 -0.20 0.00	0.00 0.00 0.43	0.00 0.00 0.14	0.01 0.01 -0.27
4	30.12 2.02 0.00	0.94E+06 58.05	0.50 0.50 0.00	0.13 0.12 0.00	-0.20 -0.20 0.00	0.00 0.00 0.53	0.00 0.00 0.15	0.00 0.00 -0.26
5	30.12 4.04 0.00	0.93E+06 55.71	0.63 0.61 0.00	0.15 0.11 0.00	-0.21 -0.21 0.00	0.00 0.00 0.61	0.00 0.00 0.17	0.00 0.00 -0.30
6	30.00 5.00 0.00	0.93E+06 55.30	0.72 0.74 0.00	0.18 0.10 0.00	-0.23 -0.23 0.00	0.00 0.00 0.70	0.00 0.00 0.19	0.00 0.00 -0.31
7	30.12 6.07 0.00	0.94E+06 55.72	0.83 0.85 0.00	0.20 0.08 0.00	-0.25 -0.25 0.00	0.00 0.00 0.80	0.00 0.00 0.22	0.00 0.00 -0.34
8	30.00 10.06 0.00	0.93E+06 55.04	0.95 0.97 0.00	0.25 0.08 0.00	-0.28 -0.28 0.00	0.00 0.00 0.92	0.00 0.00 0.24	0.00 0.00 -0.37
9	30.00 12.01 0.00	0.93E+06 55.00	1.04 1.07 0.00	0.29 0.07 0.00	-0.40 -0.40 0.00	0.00 0.00 1.01	0.00 0.00 0.31	0.00 0.00 -0.39
10	30.00 14.01 0.00	0.93E+06 55.00	1.11 1.17 0.00	0.35 0.07 0.00	-0.43 -0.43 0.00	0.00 0.00 1.08	0.00 0.00 0.37	0.00 0.00 -0.41
11	29.77 16.03 0.00	0.93E+06 56.57	1.15 1.23 0.00	0.42 0.08 0.00	-0.43 -0.43 0.00	0.00 0.00 1.13	0.00 0.00 0.43	0.00 0.00 -0.42
12	29.77 18.00 0.00	0.93E+06 55.04	1.17 1.27 0.00	0.48 0.10 0.00	-0.44 -0.44 0.00	0.00 0.00 1.15	0.00 0.00 0.50	0.00 0.00 -0.43
13	30.00 20.07 0.00	0.93E+06 50.63	1.21 1.33 0.00	0.56 0.11 0.00	-0.47 -0.47 0.00	0.00 0.00 1.18	0.00 0.00 0.57	-0.01 -0.01 -0.46
14	30.23 22.04 0.00	0.94E+06 50.10	1.17 1.31 0.00	0.00 0.12 0.00	-0.45 -0.45 0.00	0.00 0.00 1.14	0.00 0.00 0.61	-0.00 -0.00 -0.43

PROPULSIVE WING FORCE DATA

SUMMARY, RUN 140

PT	Q ALPHA DELTA	REY NO HEIGHT	CL15 CDF15 CDWC	CD15 CDF15 CDWN	CPW15 CPW15 CDWT	CDW15 CDW15 CLTR	CYW15 CYW15 CDTR	CDF15 CDF15 CNTR
1	18.78 -2.10 0.00	0.70E+06 57.81	1.00 1.00 0.00	0.07 0.13 0.40	-1.13 -1.13 0.40	0.00 0.00 1.30	-0.01 0.00 0.30	0.01 0.01 -0.04
2	18.78 0.01 0.00	0.70E+06 58.11	1.70 1.70 0.00	0.13 0.13 0.40	-1.15 -1.15 0.40	0.00 0.00 1.43	0.00 0.00 0.37	0.01 0.01 -0.07
3	18.78 2.07 0.00	0.70E+06 58.23	1.00 1.00 0.00	0.10 0.13 0.40	-1.10 -1.10 0.40	0.00 0.00 1.50	0.00 0.00 0.42	0.00 0.00 -1.11
4	18.87 4.00 0.00	0.70E+06 54.27	2.01 2.00 0.00	0.30 0.12 0.40	-1.23 -1.23 0.40	0.00 0.00 1.04	0.00 -0.01 0.47	0.02 0.00 -1.04
5	18.95 5.04 0.00	0.00E+00 54.07	2.13 2.15 0.00	0.33 0.11 0.50	-1.27 -1.27 0.50	0.00 0.00 1.74	0.00 -0.01 0.54	0.00 0.00 -1.08
6	18.95 6.02 0.00	0.00E+00 54.53	2.30 2.32 0.00	0.42 0.00 0.50	-1.31 -1.31 0.50	0.00 0.00 1.80	0.00 0.00 0.61	0.00 0.00 -1.13
7	18.95 10.01 0.00	0.00E+00 55.04	2.41 2.40 0.00	0.51 0.00 0.50	-1.30 -1.30 0.50	0.00 0.00 2.03	-0.01 -0.01 0.80	-0.01 -0.01 -1.17
8	18.87 12.02 0.00	0.70E+06 55.00	2.53 2.50 0.00	0.00 0.07 0.50	-1.27 -1.27 0.50	0.00 0.00 2.12	-0.01 -0.01 0.77	0.00 0.00 -1.10
9	18.95 14.02 0.00	0.00E+00 53.81	2.63 2.73 0.00	0.70 0.08 0.50	-1.30 -1.30 0.50	0.00 0.00 2.22	-0.01 -0.01 0.88	-0.01 -0.01 -1.20
10	18.90 16.07 0.00	0.70E+06 55.00	2.72 2.84 0.00	0.80 0.43 0.40	-1.40 -1.40 0.40	0.00 0.00 2.30	-0.01 -0.01 0.00	-0.01 -0.01 -1.21
11	18.78 18.01 0.00	0.70E+06 54.34	2.78 2.94 0.00	0.90 0.01 0.50	-1.42 -1.42 0.50	0.00 0.00 2.37	-0.01 -0.01 1.04	0.00 0.00 -1.22
12	18.44 20.04 0.00	0.00E+00 51.70	2.80 2.95 0.00	1.04 -0.01 0.51	-1.44 -1.44 0.51	0.00 0.01 2.44	-0.01 -0.01 1.10	0.00 0.00 -1.20
13	18.87 22.04 0.00	0.70E+06 50.83	2.91 3.13 0.00	1.15 -0.00 0.50	-1.43 -1.43 0.50	0.01 0.01 2.47	-0.01 -0.01 1.24	3.00 0.00 -1.24

PROPULSIVE WING FORCE DATA

SUMMARY, RUN 150

PT	Q ALPHA BETA	PRT NO HEIGHT	CL15 CDF15 CDRC	CD15 CDF15 CDRG	CPY15 CYF15 CYRT	CBN15 CBF15 CLTR	CYR15 CYF15 CDTR	CSF15 CSF15 CNTR
1	10.50 -2.00 0.00	0.90E+00 88.50	2.33 2.23 0.00	-0.10 -0.10 1.10	-1.01 -1.01 1.10	-0.01 -0.01 1.47	-0.01 -0.01 0.42	0.00 0.00 -1.10
2	10.40 0.00 0.00	0.90E+00 88.40	2.37 2.37 0.00	-0.00 -0.00 1.04	-1.00 -1.00 1.04	-0.01 -0.01 1.57	-0.01 -0.01 0.40	0.01 0.01 -1.30
3	10.40 2.04 0.00	0.90E+00 88.70	2.40 2.40 0.00	0.02 -0.00 1.04	-1.04 -1.04 1.04	-0.01 -0.01 1.07	-0.01 -0.01 0.01	0.01 0.01 -1.23
4	10.50 4.00 0.00	0.90E+00 88.51	2.00 2.00 0.00	0.12 -0.07 1.03	-1.00 -1.00 1.03	-0.01 -0.01 1.70	-0.01 -0.01 0.57	0.01 0.01 -1.20
5	10.40 6.04 0.00	0.90E+00 88.16	2.70 2.70 0.00	0.21 -0.00 1.00	-1.72 -1.72 1.07	-0.01 -0.01 1.00	-0.01 -0.01 0.04	-0.01 -0.01 -1.31
6	10.40 8.00 0.00	0.90E+00 84.00	2.00 2.07 0.00	0.33 -0.00 1.00	-1.70 -1.70 1.00	-0.01 -0.01 2.00	-0.01 -0.01 0.73	0.01 0.01 -1.30
7	10.00 10.03 0.00	0.90E+00 80.00	3.00 3.00 0.00	0.44 -0.10 1.00	-1.70 -1.70 1.00	-0.01 -0.01 2.30	-0.01 -0.01 0.00	0.00 0.00 -1.30
8	10.50 12.03 0.00	0.90E+00 80.00	3.10 3.23 0.00	0.50 -0.12 1.03	-1.03 -1.03 1.03	-0.01 0.00 2.31	-0.01 -0.01 0.00	0.00 0.00 -1.42
9	10.20 14.00 0.00	0.90E+00 80.00	3.34 3.41 0.00	0.00 -0.15 1.00	-1.07 -1.07 1.00	-0.01 0.00 2.42	-0.01 -0.01 1.00	0.00 0.00 -1.40
10	10.20 16.00 0.00	0.90E+00 84.03	3.43 3.52 0.00	0.01 -0.17 1.00	-1.00 -1.00 1.00	0.00 0.00 2.51	-0.01 -0.01 1.00	-0.01 -0.01 -1.40
11	10.50 18.01 0.00	0.90E+00 80.33	3.47 3.50 0.00	0.06 -0.17 1.04	-1.00 -1.00 1.04	0.00 0.00 2.50	-0.02 -0.02 1.10	0.01 0.01 -1.40
12	10.40 20.04 0.00	0.90E+00 82.01	3.53 3.00 0.00	1.00 -0.20 1.04	-1.00 -1.00 1.04	0.00 0.01 2.00	-0.00 -0.01 1.30	0.00 0.00 -1.47
13	10.30 22.03 0.00	0.90E+00 80.22	3.63 3.63 0.00	1.23 -0.22 1.00	-1.00 -1.00 1.00	0.01 0.01 2.00	-0.00 -0.01 1.41	-0.05 -0.02 -1.40

PROPULSIVE WING FORCE DATA

SUMMARY, RUN 151

PT	Q ALPHA BETA	PRT NO HEIGHT	CL15 CDF15 CDRC	CD15 CDF15 CDRG	CPY15 CYF15 CDRT	CBN15 CBF15 CLTR	CYR15 CYF15 CDTR	CSF15 CSF15 CNTR
1	3.20 -2.01 0.00	0.30E+00 87.00	3.12 3.14 0.00	-0.00 -0.05 2.00	-2.23 -2.23 2.00	-0.00 -0.00 1.00	-0.00 -0.00 0.40	0.00 0.00 -1.40
2	3.20 0.00 0.00	0.30E+00 88.14	3.10 3.10 0.00	-0.47 -0.47 2.00	-2.23 -2.23 2.00	-0.00 -0.00 1.03	-0.00 -0.00 0.00	0.00 0.00 -1.04
3	3.17 2.00 0.00	0.30E+00 88.07	3.00 3.00 0.00	-0.30 -0.47 2.13	-2.20 -2.20 2.13	-0.00 -0.00 1.00	-0.00 -0.00 0.00	0.00 0.00 -1.00
4	3.00 4.00 0.00	0.30E+00 88.73	3.70 3.72 0.00	-0.24 -0.50 2.17	-2.00 -2.00 2.17	-0.00 -0.00 2.04	-0.00 -0.00 0.71	0.00 0.00 -1.00
5	3.10 6.07 0.00	0.30E+00 83.03	3.00 3.00 0.00	-0.00 -0.50 2.11	-2.00 -2.00 2.11	-0.00 -0.00 2.17	-0.00 -0.00 0.70	0.00 3.00 -1.00
6	3.00 8.00 0.00	0.30E+00 84.30	4.21 4.10 0.00	0.00 -0.51 2.10	-2.51 -2.51 2.10	-0.00 -0.00 2.40	-0.00 -0.00 0.00	0.00 0.00 -1.00
7	3.17 10.00 0.00	0.30E+00 80.70	4.10 4.14 0.00	0.23 -0.50 2.10	-2.57 -2.57 2.10	-0.00 -0.00 2.03	-0.00 -0.00 0.07	0.00 0.00 -1.70
8	3.00 12.00 0.00	0.30E+00 80.03	4.00 4.20 0.00	0.20 -0.54 2.17	-2.00 -2.00 2.17	-0.00 -0.01 2.07	-0.00 -0.00 1.00	-0.01 -0.01 -1.00
9	3.17 14.00 0.00	0.30E+00 80.00	4.00 4.04 0.00	0.00 -0.55 2.11	-2.00 -2.00 2.11	-0.00 -0.01 2.00	-0.00 -0.00 1.17	-0.00 -0.00 -1.70
10	3.20 16.07 0.00	0.30E+00 80.20	4.03 4.05 0.00	0.70 -0.50 2.12	-2.04 -2.04 2.12	-0.00 -0.01 2.00	-0.00 -0.00 1.20	0.00 0.00 -1.00
11	3.17 18.04 0.00	0.30E+00 80.57	4.03 4.07 0.00	0.00 -0.00 2.15	-2.00 -2.00 2.15	-0.01 -0.01 2.72	-0.00 -0.00 1.30	-0.01 -0.01 -1.04
12	3.00 20.04 0.00	0.30E+00 82.10	4.70 4.00 0.00	1.04 -0.00 2.24	-2.70 -2.70 2.24	-0.01 0.00 2.01	-0.00 -0.00 1.40	-0.04 -0.00 -1.04
13	3.20 22.05 0.00	0.30E+00 80.51	4.73 4.04 0.00	1.21 -0.00 2.13	-2.00 -2.00 2.13	-0.01 0.00 2.03	-0.00 -0.00 1.07	-0.00 -0.00 -1.00

PROPULSIVE WING FORCE DATA

SUMMARY. RUN 102

PT	Q ALPHA BETA	RET NO HEIGHT	CL15 CDF15 CMC	CD15 CAF15 CMA	CPN15 CPN15 CMT	CRN15 CRN15 CLTR	CYN15 CYN15 CDTR	CSF15 CSF15 CNTR
1	10.90 -2.15 5.00	0.70E+06 84.20	1.04 1.03 0.00	0.00 0.14 0.48	-1.11 -1.11 0.48	0.00 0.00 1.30	-0.02 -0.02 0.33	-0.00 -0.02 -0.03
2	10.44 0.01 5.00	0.00E+00 83.00	1.70 1.70 0.00	0.14 0.14 0.48	-1.15 -1.15 0.48	0.00 0.00 1.40	-0.02 -0.02 0.37	-0.03 -0.03 -0.06
3	10.44 2.00 5.00	0.00E+00 84.50	1.07 1.07 0.00	0.20 0.13 0.48	-1.18 -1.18 0.48	0.00 0.00 1.51	-0.02 -0.02 0.42	-0.03 -0.03 -1.00
4	10.44 4.00 5.00	0.00E+00 84.30	1.07 1.00 0.00	0.20 0.12 0.48	-1.20 -1.20 0.48	0.00 0.00 1.00	-0.02 -0.02 0.47	-0.04 -0.04 -1.02
5	10.22 6.00 5.00	0.00E+00 87.00	2.12 2.14 0.00	0.23 0.11 0.48	-1.25 -1.25 0.48	0.00 0.01 1.74	-0.02 -0.02 0.53	-0.03 -0.03 -1.07
6	10.22 8.04 5.00	0.00E+00 83.95	2.24 2.20 0.00	0.42 0.10 0.48	-1.28 -1.28 0.48	0.00 0.01 1.86	-0.03 -0.03 0.00	-0.03 -0.03 -1.10
7	10.00 10.00 5.00	0.00E+00 88.12	2.41 2.40 0.00	0.51 0.08 0.49	-1.33 -1.33 0.49	0.01 0.01 2.02	-0.03 -0.03 0.00	-0.04 -0.04 -1.15
8	10.00 12.00 5.00	0.00E+00 88.01	2.53 2.50 0.00	0.61 0.00 0.49	-1.37 -1.37 0.49	0.00 0.01 2.13	-0.03 -0.03 0.77	-0.05 -0.05 -1.18
9	10.00 14.00 5.00	0.70E+06 87.20	2.00 2.00 0.00	0.70 0.00 0.48	-1.30 -1.30 0.48	0.01 0.01 2.20	-0.04 -0.03 0.84	-0.05 -0.05 -1.18
10	10.22 16.01 5.00	0.00E+00 88.34	2.72 2.04 0.00	0.81 0.03 0.49	-1.40 -1.40 0.49	0.00 0.01 2.32	-0.04 -0.03 0.94	-0.07 -0.07 -1.22
11	10.78 18.00 5.00	0.70E+06 88.37	2.76 2.90 0.00	0.91 0.02 0.48	-1.30 -1.30 0.48	0.01 0.00 2.36	-0.04 -0.04 1.03	-0.06 -0.06 -1.29
12	10.44 19.00 5.00	0.00E+00 91.50	2.04 3.02 0.00	1.03 0.00 0.48	-1.42 -1.42 0.48	0.01 0.00 2.43	-0.04 -0.03 1.14	-0.10 -0.10 -1.24
13	10.90 22.03 5.00	0.70E+06 88.36	2.00 2.00 0.00	1.14 -0.01 0.48	-1.40 -1.40 0.48	0.01 0.03 2.46	-0.06 -0.04 1.23	-0.10 -0.10 -1.22

PROPULSIVE WING FORCE DATA

SUMMARY. RUN 102

PT	Q ALPHA BETA	RET NO HEIGHT	CL15 CDF15 CMC	CD15 CAF15 CMA	CPN15 CPN15 CMT	CRN15 CRN15 CLTR	CYN15 CYN15 CDTR	CSF15 CSF15 CNTR
1	10.00 -1.00 5.00	0.94E+06 85.22	2.01 2.01 0.00	-0.03 0.04 0.00	-1.30 -1.30 0.00	-0.01 -0.01 1.46	-0.02 -0.02 0.30	-0.03 -0.03 -1.06
2	10.00 0.02 5.00	0.94E+06 85.04	2.12 2.12 0.00	0.03 0.03 0.00	-1.41 -1.41 0.00	-0.01 -0.01 1.56	-0.02 -0.02 0.42	-0.03 -0.03 -1.11
3	10.12 2.00 5.00	0.94E+06 85.00	2.24 2.24 0.00	0.11 0.03 0.70	-1.44 -1.44 0.70	-0.01 -0.01 1.66	-0.02 -0.02 0.47	-0.03 -0.03 -1.14
4	10.23 4.00 5.00	0.94E+06 85.54	2.38 2.38 0.00	0.20 0.03 0.70	-1.48 -1.48 0.70	-0.01 -0.01 1.70	-0.02 -0.02 0.54	-0.03 -0.03 -1.10
5	10.28 6.02 5.00	0.94E+06 85.42	2.48 2.54 0.00	0.30 0.02 0.70	-1.51 -1.51 0.70	0.00 0.00 1.80	-0.02 -0.02 0.00	-0.03 -0.03 -1.22
6	10.28 8.03 5.00	0.94E+06 84.48	2.63 2.66 0.00	0.30 0.01 0.77	-1.54 -1.54 0.77	0.00 0.01 2.02	-0.03 -0.03 0.00	-0.03 -0.03 -1.28
7	10.56 10.04 5.00	0.94E+06 85.41	2.72 2.76 0.00	0.40 0.00 0.78	-1.54 -1.54 0.78	0.00 0.01 2.11	-0.03 -0.02 0.78	-0.04 -0.04 -1.30
8	10.40 12.00 5.00	0.94E+06 87.01	2.80 2.86 0.00	0.50 -0.00 0.77	-1.61 -1.61 0.77	0.00 0.01 2.27	-0.03 -0.03 0.86	-0.06 -0.06 -1.33
9	10.40 14.00 5.00	0.94E+06 85.70	2.90 3.04 0.00	0.70 -0.04 0.78	-1.61 -1.61 0.78	0.00 0.01 2.34	-0.04 -0.03 0.92	-0.07 -0.07 -1.32
10	10.40 16.03 5.00	0.94E+06 85.11	3.08 3.18 0.00	0.82 -0.08 0.78	-1.64 -1.64 0.78	0.00 0.01 2.42	-0.04 -0.04 1.00	-0.07 -0.07 -1.36
11	10.23 18.00 5.00	0.94E+06 85.75	3.18 3.22 0.00	0.95 -0.07 0.78	-1.70 -1.70 0.78	0.00 0.02 2.52	-0.05 -0.04 1.15	-0.07 -0.07 -1.41
12	10.23 20.12 5.00	0.94E+06 82.10	3.23 3.40 0.00	1.06 -0.08 0.78	-1.87 -1.87 0.78	0.01 0.02 2.56	-0.05 -0.04 1.25	-0.08 -0.08 -1.36
13	10.00 22.15 5.00	0.94E+06 80.40	3.35 3.56 0.00	1.24 -0.11 0.00	-1.73 -1.73 0.00	0.01 0.03 2.66	-0.00 -0.05 1.36	-0.11 -0.11 -1.43

PROPULSIVE WING FORCE DATA

SUMMARY. RUN 154

PT	Q ALPHA BETA	REY NO HEIGHT	CL15 CDF10 CNUC	CD15 CAF10 CNUN	CPM15 CPM10 CNUT	CBM15 CBM10 CLTB	CYM15 CYM10 CDTB	CSF15 CSF10 CNTB
1	5.17 -1.00 5.00	0.30E+06 86.05	2.00 2.00 0.00	-0.20 -0.23 1.53	-1.00 -1.00 1.53	-0.01 -0.02 1.00	-0.03 -0.03 0.46	0.00 0.00 -1.22
2	5.00 0.00 5.00	0.30E+06 85.22	2.02 2.02 0.00	-0.20 -0.20 1.61	-2.00 -2.00 1.61	-0.00 -0.02 1.76	-0.03 -0.03 0.52	-0.02 -0.02 -1.40
3	5.20 2.00 5.00	0.40E+06 85.13	2.05 2.04 0.00	-0.14 -0.24 1.52	-1.07 -1.07 1.52	-0.02 -0.00 1.83	-0.03 -0.03 0.56	-0.03 -0.03 -1.40
4	5.20 4.03 5.00	0.40E+06 83.05	2.11 2.10 0.00	-0.03 -0.25 1.54	-2.01 -2.01 1.54	-0.02 -0.02 1.05	-0.03 -0.03 0.04	-0.03 -0.03 -1.43
5	5.17 0.00 5.00	0.30E+06 84.07	2.23 2.22 0.00	0.00 -0.25 1.57	-2.10 -2.10 1.57	-0.01 -0.01 2.12	-0.03 -0.03 0.73	-0.04 -0.04 -1.51
6	5.17 2.06 5.00	0.30E+06 87.00	2.42 2.42 0.00	0.31 -0.27 1.57	-2.14 -2.14 1.57	-0.01 -0.01 2.10	-0.03 -0.03 0.81	-0.05 -0.05 -1.56
7	5.20 10.07 5.00	0.40E+06 88.42	2.52 2.53 0.00	0.34 -0.20 1.55	-2.13 -2.13 1.55	-0.01 0.00 2.30	-0.03 -0.03 0.88	-0.07 -0.07 -1.56
8	5.20 12.04 5.00	0.40E+06 88.00	2.00 2.71 0.00	0.40 -0.20 1.54	-2.10 -2.10 1.54	-0.01 0.00 2.45	-0.03 -0.04 0.90	-0.06 -0.05 -1.56
9	5.17 14.03 5.00	0.30E+06 88.71	3.00 3.02 0.00	0.04 -0.22 1.57	-2.23 -2.23 1.57	-0.01 0.00 2.50	-0.04 -0.04 1.10	-0.08 -0.08 -1.64
10	5.20 16.00 5.00	0.40E+06 88.00	3.00 3.05 0.00	0.77 -0.34 1.54	-2.22 -2.22 1.54	-0.01 0.01 2.02	-0.05 -0.05 1.16	-0.07 -0.07 -1.64
11	5.20 18.10 5.00	0.40E+06 88.06	4.01 4.10 0.00	0.03 -0.26 1.54	-2.23 -2.22 1.54	0.00 0.01 2.72	-0.05 -0.05 1.30	-0.08 -0.08 -1.66
12	5.17 20.04 5.00	0.30E+06 91.97	4.00 4.22 0.00	1.00 -0.30 1.57	-2.26 -2.26 1.57	0.00 0.02 2.75	-0.06 -0.05 1.41	-0.11 -0.11 -1.87
13	5.17 22.00 5.00	0.30E+06 90.43	4.25 4.43 0.00	1.20 -0.40 1.58	-2.33 -2.33 1.58	0.00 0.02 2.92	-0.05 -0.05 1.57	-0.15 -0.15 -1.74

PROPULSIVE WING FORCE DATA

SUMMARY. RUN 155

PT	Q ALPHA BETA	REY NO HEIGHT	CL15 CDF10 CNUC	CD15 CAF10 CNUN	CPM15 CPM10 CNUT	CBM15 CBM10 CLTB	CYM15 CYM10 CDTB	CSF15 CSF10 CNTB
2	30.12 -0.06 15.00	0.94E+06 88.33	0.46 0.46 0.00	0.12 0.12 0.00	-0.27 -0.27 0.00	0.00 0.00 0.43	-0.06 -0.06 0.14	-0.06 -0.06 -0.26
3	29.77 -0.06 10.00	0.93E+06 88.33	0.47 0.47 0.00	0.12 0.12 0.00	-0.28 -0.28 0.00	0.00 0.00 0.46	-0.04 -0.04 0.14	-0.03 -0.03 -0.27
4	29.77 -0.04 7.00	0.93E+06 88.33	0.48 0.48 0.00	0.12 0.12 0.00	-0.29 -0.29 0.00	0.00 0.00 0.46	-0.03 -0.03 0.14	-0.06 -0.03 -0.26
5	30.12 -0.04 5.00	0.94E+06 88.33	0.48 0.49 0.00	0.12 0.12 0.00	-0.29 -0.29 0.00	0.00 0.00 0.46	-0.02 -0.02 0.14	-0.08 -0.08 -0.27
6	30.23 -0.04 4.00	0.94E+06 88.33	0.48 0.48 0.00	0.12 0.12 0.00	-0.29 -0.29 0.00	0.00 0.00 0.46	-0.02 -0.02 0.14	0.00 0.00 -0.27
7	30.12 -0.04 1.00	0.94E+06 88.33	0.48 0.48 0.00	0.12 0.12 0.00	-0.29 -0.29 0.00	0.00 0.00 0.47	-0.01 -0.01 0.14	0.00 0.00 -0.26
8	30.00 -0.03 0.00	0.94E+06 88.33	0.47 0.48 0.00	0.12 0.12 0.00	-0.28 -0.28 0.00	0.00 0.00 0.45	0.00 0.00 0.14	0.01 0.01 -0.27
9	30.00 -0.03 -2.00	0.94E+06 88.33	0.47 0.47 0.00	0.12 0.12 0.00	-0.28 -0.28 0.00	0.00 0.00 0.45	0.01 0.01 0.14	0.01 0.01 -0.27
10	30.12 -0.03 -4.01	0.94E+06 88.33	0.48 0.48 0.00	0.12 0.12 0.00	-0.28 -0.28 0.00	0.00 0.00 0.45	0.02 0.02 0.14	0.02 0.02 -0.27
11	30.00 -0.03 -6.00	0.94E+06 88.33	0.48 0.48 0.00	0.12 0.12 0.00	-0.28 -0.28 0.00	0.00 0.00 0.46	0.02 0.02 0.14	0.03 0.03 -0.27
12	30.12 -0.02 -8.00	0.94E+06 88.33	0.48 0.48 0.00	0.12 0.12 0.00	-0.30 -0.30 0.00	0.00 0.00 0.47	0.03 0.03 0.14	0.03 0.03 -0.26
13	30.00 -0.03 -10.01	0.94E+06 88.33	0.48 0.48 0.00	0.12 0.12 0.00	-0.28 -0.28 0.00	0.00 0.00 0.48	0.04 0.04 0.14	0.05 0.05 -0.26
14	30.00 -0.02 -15.02	0.94E+06 88.33	0.48 0.49 0.00	0.12 0.12 0.00	-0.30 -0.30 0.00	0.00 0.00 0.49	0.06 0.06 0.14	0.08 0.08 -0.26

PROPULSIVE WING FORCE DATA

SUMMARY, RUN 196

PT	Q ALPHA BETA	DET NO HEIGHT	CL15 CDF15 CNUC	CD15 CAF15 CNUN	CPR15 CPN15 CNUT	CBR15 CBN15 CLTB	CYR15 CYN15 CDTB	CSF15 CSF15 CNTB
1	10.70 -0.03 10.00	0.70E+00 00.00	1.74 1.74 0.00	0.12 0.12 0.50	-1.16 -1.16 0.50	0.00 0.00 1.40	-0.00 -0.00 0.31	-0.00 -0.00 -0.00
2	10.70 -0.03 10.00	0.70E+00 00.00	1.70 1.70 0.00	0.13 0.13 0.50	-1.17 -1.17 0.50	0.00 0.00 1.43	-0.03 -0.03 0.30	-0.00 -0.00 -0.00
3	10.00 -0.03 0.01	0.71E+00 00.00	1.77 1.77 0.00	0.13 0.13 0.40	-1.15 -1.15 0.40	0.00 0.00 1.42	-0.03 -0.03 0.30	-0.04 -0.04 -0.10
4	10.07 -0.03 5.00	0.70E+00 00.00	1.70 1.70 0.00	0.13 0.13 0.50	-1.17 -1.17 0.50	0.00 0.00 1.44	-0.02 -0.02 0.37	-0.02 -0.02 -0.00
5	10.70 -0.03 0.00	0.70E+00 00.00	1.70 1.70 0.00	0.13 0.13 0.51	-1.17 -1.17 0.51	0.00 0.00 1.44	-0.02 -0.02 0.37	-0.01 -0.01 -0.00
6	10.70 -0.02 2.00	0.70E+00 00.00	1.70 1.70 0.00	0.13 0.14 0.50	-1.17 -1.17 0.50	0.00 0.00 1.43	-0.01 -0.01 0.37	0.01 0.01 -0.00
7	10.70 -0.02 0.00	0.70E+00 00.00	1.70 1.70 0.00	0.13 0.14 0.51	-1.17 -1.17 0.51	-0.01 -0.01 1.44	-0.01 -0.01 0.37	0.02 0.02 -0.00
8	10.07 -0.02 -2.00	0.70E+00 00.00	1.00 1.00 0.00	0.13 0.12 0.51	-1.16 -1.16 0.51	-0.01 -0.01 1.44	0.00 0.00 0.37	0.03 0.03 -0.00
9	10.50 -0.01 -4.04	0.70E+00 00.00	1.01 1.01 0.00	0.13 0.13 0.51	-1.16 -1.16 0.51	-0.01 -0.01 1.44	0.01 0.01 0.36	0.04 0.04 -0.00
10	10.44 -0.01 -6.00	0.70E+00 00.00	1.01 1.01 0.00	0.13 0.13 0.52	-1.19 -1.19 0.52	-0.01 -0.01 1.45	0.01 0.01 0.36	0.05 0.05 -0.00
11	10.07 -0.01 -8.03	0.70E+00 00.00	1.00 1.00 0.00	0.13 0.13 0.51	-1.17 -1.17 0.51	-0.01 -0.01 1.44	0.02 0.02 0.37	0.00 0.00 -0.00
12	10.50 -0.01 -10.01	0.70E+00 00.00	1.00 1.00 0.00	0.13 0.13 0.51	-1.17 -1.17 0.51	-0.01 -0.01 1.44	0.02 0.02 0.37	0.00 0.00 -0.00
13	10.70 -0.01 -10.01	0.70E+00 00.00	1.70 1.70 0.00	0.12 0.12 0.51	-1.16 -1.16 0.51	-0.01 -0.01 1.41	0.04 0.04 0.36	0.13 0.13 -0.00

PROPULSIVE WING FORCE DATA

SUMMARY RUN 197

PT	Q ALPHA BETA	DET NO HEIGHT	CL15 CNF15 CNUC	CD15 CAF15 CNUN	CPR15 CPN15 CNUT	CBR15 CBN15 CLTB	CYR15 CYN15 CDTB	CSF15 CSF15 CNTB
1	10.50 -0.03 10.00	0.50E+00 00.00	2.30 2.30 0.00	-0.07 -0.07 1.05	-1.50 -1.50 1.05	0.00 0.00 1.50	-0.00 -0.00 0.43	-0.00 -0.00 -1.30
2	10.00 -0.03 10.01	0.50E+00 00.00	2.27 2.27 0.00	-0.07 -0.07 1.04	-1.50 -1.50 1.04	-0.01 -0.01 1.50	-0.04 -0.04 0.43	-0.00 -0.00 -1.10
3	10.00 -0.03 0.00	0.50E+00 00.00	2.30 2.30 0.00	-0.07 -0.07 1.04	-1.50 -1.50 1.04	-0.01 -0.01 1.50	-0.03 -0.03 0.44	-0.04 -0.04 -1.30
4	10.50 -0.02 5.00	0.50E+00 00.00	2.30 2.30 0.00	-0.07 -0.07 1.05	-1.50 -1.50 1.05	-0.01 -0.01 1.50	-0.03 -0.03 0.44	-0.00 -0.00 -1.30
5	10.50 -0.02 7.00	0.50E+00 00.00	2.40 2.40 0.00	-0.07 -0.06 1.06	-1.51 -1.51 1.06	-0.01 -0.01 1.02	-0.03 -0.03 0.44	-0.01 -0.01 -1.31
6	10.50 -0.02 2.01	0.50E+00 00.00	2.41 2.41 0.00	-0.07 -0.07 1.06	-1.52 -1.52 1.06	-0.01 -0.01 1.53	-0.02 -0.02 0.44	0.00 0.00 -1.32
7	10.50 -0.02 -0.04	0.50E+00 00.00	2.30 2.30 0.00	-0.07 -0.07 1.06	-1.50 -1.50 1.06	-0.01 -0.01 1.50	-0.01 -0.01 0.44	0.02 0.02 -1.30
8	10.50 -0.02 -2.02	0.50E+00 00.00	2.40 2.40 0.00	-0.07 -0.07 1.06	-1.51 -1.51 1.06	-0.01 -0.01 1.51	-0.01 -0.01 0.44	0.03 0.03 -1.31
9	10.40 -0.02 -4.05	0.50E+00 00.00	2.41 2.41 0.00	-0.07 -0.07 1.07	-1.52 -1.52 1.07	-0.01 -0.01 1.51	0.00 0.00 0.46	0.00 0.00 -1.32
10	10.40 -0.01 -6.02	0.50E+00 00.00	2.40 2.40 0.00	-0.06 -0.06 1.06	-1.51 -1.51 1.06	-0.01 -0.01 1.50	0.00 0.00 0.44	0.07 0.07 -1.30
11	10.50 -0.01 -8.02	0.50E+00 00.00	2.40 2.40 0.00	-0.07 -0.07 1.06	-1.51 -1.51 1.06	-0.01 -0.01 1.51	0.01 0.01 0.44	0.00 0.00 -1.30
12	10.50 -0.01 -10.00	0.50E+00 00.00	2.40 2.40 0.00	-0.07 -0.07 1.05	-1.51 -1.51 1.06	-0.01 -0.01 1.51	0.01 0.01 0.44	0.10 0.10 -1.31
13	10.50 0.00 -10.01	0.50E+00 00.00	2.30 2.30 0.00	-0.06 -0.06 1.05	-1.51 -1.51 1.06	-0.02 -0.02 1.50	0.03 0.03 0.43	0.14 0.14 -1.31

PROPULSIVE WING FORCE DATA

SUMMARY. RUN 100

PT	Q ALPHA BETA	REY NO HEIGHT	CL15 CAF10 CRUC	CD15 CAF10 CRUN	CPR15 CPR10 CRUT	CBR15 CBR10 CLTR	CYR15 CYR10 CNTR	CSF15 CSF10 CNTR
2	30.12 8.10 15.00	0.94E+06 85.92	0.03 0.00 0.00	0.20 0.00 0.00	-0.35 -0.35 0.00	-0.01 0.00 0.00	-0.06 -0.06 0.27	-0.10 -0.10 -0.34
3	30.13 8.12 10.00	0.95E+06 85.92	0.03 0.00 0.00	0.20 0.00 0.00	-0.35 -0.35 0.00	-0.01 0.00 0.01	-0.04 -0.04 0.22	-0.06 -0.06 -0.33
4	30.00 8.12 8.01	0.94E+06 85.92	0.04 0.00 0.00	0.21 0.00 0.00	-0.35 -0.35 0.00	0.00 0.00 0.02	-0.03 -0.03 0.22	-0.04 -0.04 -0.34
5	30.00 8.13 5.00	0.94E+06 85.92	0.04 0.00 0.00	0.21 0.00 0.00	-0.35 -0.35 0.00	0.00 0.00 0.02	-0.02 -0.02 0.22	-0.02 -0.02 -0.34
6	30.00 8.14 3.07	0.94E+06 85.92	0.03 0.00 0.00	0.20 0.00 0.00	-0.35 -0.35 0.00	0.00 0.00 0.01	-0.02 -0.02 0.22	-0.02 -0.02 -0.33
7	29.00 8.14 2.05	0.94E+06 85.92	0.03 0.00 0.00	0.20 0.00 0.00	-0.34 -0.34 0.00	0.00 0.00 0.01	-0.01 -0.01 0.22	-0.01 -0.01 -0.33
8	30.00 8.14 -0.07	0.94E+06 85.92	0.02 0.00 0.00	0.20 0.00 0.00	-0.34 -0.34 0.00	0.00 0.00 0.70	0.00 0.00 0.22	0.00 0.00 -0.32
9	30.00 8.14 -2.05	0.94E+06 85.92	0.05 0.07 0.00	0.21 0.00 0.00	-0.37 -0.37 0.00	0.00 0.00 0.03	0.01 0.01 0.22	0.01 0.01 -0.35
10	30.00 8.15 -4.02	0.94E+06 85.92	0.04 0.00 0.00	0.21 0.00 0.00	0.35 -0.35 0.00	0.00 0.00 0.02	0.02 0.02 0.22	0.03 0.03 -0.33
11	30.12 8.14 -6.01	0.94E+06 85.92	0.07 0.00 0.00	0.21 0.00 0.00	-0.38 -0.38 0.00	0.00 0.00 0.04	0.02 0.03 0.23	0.04 0.04 -0.37
12	30.12 8.15 -8.01	0.94E+06 85.92	0.06 0.00 0.00	0.21 0.00 0.00	-0.37 -0.37 0.00	0.00 0.00 0.04	0.03 0.03 0.23	0.05 0.05 -0.35
13	30.23 8.15 -10.02	0.95E+06 85.92	0.04 0.00 0.00	0.20 0.00 0.00	-0.36 -0.36 0.00	0.00 0.00 0.02	0.04 0.04 0.22	0.06 0.06 -0.35
14	30.12 8.15 -15.01	0.94E+06 85.92	0.04 0.00 0.00	0.20 0.00 0.00	-0.37 -0.37 0.00	0.01 0.00 0.02	0.06 0.06 0.22	0.12 0.12 -0.36

PROPULSIVE WING FORCE DATA

SUMMARY. RUN 100

PT	Q ALPHA BETA	REY NO HEIGHT	CL15 CAF10 CRUC	CD15 CAF10 CRUN	CPR15 CPR10 CRUT	CBR15 CBR10 CLTR	CYR15 CYR10 CNTR	CSF15 CSF10 CNTR
1	16.56 7.88 15.00	0.70E+06 85.92	2.22 2.25 0.00	0.20 0.00 0.50	-1.28 -1.28 0.50	0.01 0.01 1.04	-0.06 -0.06 0.57	-0.13 -0.13 -1.10
2	16.90 7.87 10.01	0.71E+06 85.92	2.24 2.28 0.00	0.40 0.00 0.46	-1.28 -1.28 0.46	0.00 0.01 1.07	-0.05 -0.04 0.58	-0.07 -0.07 -1.10
3	16.90 7.87 7.00	0.71E+06 85.92	2.28 2.31 0.00	0.40 0.00 0.50	-1.31 -1.31 0.50	0.01 0.01 1.00	-0.04 -0.04 0.50	-0.06 -0.06 -1.13
4	16.87 7.88 6.00	0.70E+06 85.92	2.23 2.27 0.00	0.41 0.10 0.47	-1.27 -1.27 0.47	0.01 0.01 1.08	-0.03 -0.03 0.58	-0.04 -0.04 -1.10
5	16.87 7.88 4.00	0.70E+06 85.92	2.26 2.22 0.00	0.41 0.00 0.50	-1.31 -1.31 0.50	0.00 0.01 1.00	-0.02 -0.02 0.50	-0.03 -0.03 -1.13
6	16.87 7.88 2.01	0.70E+06 85.92	2.27 2.31 0.00	0.40 0.00 0.49	-1.30 -1.30 0.49	0.00 0.00 1.00	-0.01 -0.01 0.50	-0.01 -0.01 -1.12
7	16.87 7.88 -0.01	0.71E+06 85.92	2.28 2.31 0.00	0.41 0.00 0.49	-1.30 -1.30 0.49	-0.01 -0.01 1.00	0.00 0.00 0.50	0.00 0.00 -1.12
8	16.55 7.88 -2.00	0.70E+06 85.92	2.30 2.34 0.00	0.41 0.00 0.49	-1.32 -1.32 0.49	-0.01 -0.01 1.02	0.00 0.00 0.50	0.02 0.02 -1.14
9	16.44 7.88 -4.04	0.70E+06 85.92	2.31 2.35 0.00	0.41 0.00 0.51	-1.33 -1.33 0.51	-0.01 -0.01 1.02	0.01 0.01 0.51	0.04 0.04 -1.14
10	16.56 7.88 -6.02	0.70E+06 85.92	2.30 2.33 0.00	0.41 0.00 0.51	-1.32 -1.32 0.51	-0.01 -0.01 1.01	0.02 0.01 0.50	0.06 0.06 -1.14
11	16.55 7.90 -8.03	0.70E+06 85.92	2.30 2.34 0.00	0.41 0.00 0.50	-1.32 -1.32 0.50	-0.01 -0.02 1.01	0.02 0.02 0.50	0.07 0.07 -1.14
12	16.55 7.90 -10.00	0.70E+06 85.92	2.27 2.31 0.00	0.41 0.00 0.49	-1.30 -1.30 0.49	-0.01 -0.02 1.00	0.03 0.03 0.50	0.08 0.08 -1.12
13	16.55 7.81 -15.03	0.70E+06 85.92	2.17 2.20 0.00	0.20 0.00 0.47	-1.24 -1.24 0.47	-0.01 -0.02 1.01	0.05 0.05 0.50	0.14 0.14 -1.07

PROPULSIVE WING FORCE DATA

SUMMARY, RUN 160

PT	Q ALPHA BETA	RET RD HEIGHT	CL15 CAF15 CNUC	CD15 CAF15 CNUN	CPM15 CPN15 CNUT	CBM15 CBN15 CLTR	CYM15 CYN15 CDTR	CSF15 CSF15 CNTR
1	10.50 7.04 14.90	0.50E+06 85.92	2.07 2.06 0.00	0.30 -0.11 1.06	-1.73 -1.73 1.06	-0.01 0.00 2.03	-0.06 -0.07 0.68	-0.12 -0.12 -1.33
2	10.00 7.05 10.01	0.57E+06 85.92	2.00 2.00 0.00	0.29 -0.10 1.04	-1.75 -1.75 1.04	0.00 0.00 2.06	-0.05 -0.06 0.00	-0.07 -0.07 -1.36
3	10.48 7.05 7.00	0.50E+06 85.92	2.00 2.07 0.00	0.30 -0.11 1.06	-1.70 -1.70 1.06	0.00 0.00 2.10	-0.04 -0.04 0.70	-0.06 -0.06 -1.30
4	10.50 7.05 0.01	0.50E+06 85.92	2.03 2.05 0.00	0.30 -0.10 1.06	-1.76 -1.76 1.06	0.00 0.00 2.00	-0.03 -0.03 0.70	-0.04 -0.04 -1.36
5	10.50 7.05 4.01	0.50E+06 85.92	2.04 2.00 0.00	0.30 -0.11 1.06	-1.77 -1.77 1.06	0.00 0.00 2.00	-0.02 -0.03 0.70	-0.03 -0.03 -1.37
6	10.50 7.05 2.00	0.50E+06 85.92	2.06 2.06 0.00	0.30 -0.11 1.06	-1.76 -1.76 1.06	0.00 0.00 2.00	-0.02 -0.02 0.70	-0.01 -0.01 -1.37
7	10.46 7.06 0.01	0.50E+06 85.92	2.00 2.00 0.00	0.31 -0.10 1.06	-1.70 -1.70 1.05	-0.01 -0.01 2.12	-0.01 -0.01 0.71	0.01 0.01 -1.30
8	10.46 7.06 -2.07	0.50E+06 85.92	2.03 2.04 0.00	0.31 -0.00 1.03	-1.76 -1.76 1.03	-0.02 -0.02 2.10	0.00 -0.01 0.70	0.03 0.03 -1.37
9	10.50 7.07 -4.04	0.50E+06 85.92	2.03 2.04 0.00	0.31 -0.00 1.03	-1.75 -1.75 1.03	-0.02 -0.03 2.00	0.00 0.00 0.70	0.05 0.05 -1.36
10	10.50 7.07 -6.01	0.50E+06 85.92	2.04 2.06 0.00	0.22 -0.00 1.03	-1.77 -1.77 1.03	-0.02 -0.02 2.11	0.01 0.00 0.71	0.07 0.07 -1.37
11	10.50 7.07 -8.02	0.50E+06 85.92	2.01 2.02 0.00	0.31 -0.00 1.02	-1.74 -1.74 1.02	-0.02 -0.02 2.00	0.02 0.01 0.70	0.00 0.00 -1.35
12	10.50 7.07 -10.00	0.50E+06 85.92	2.00 2.01 0.00	0.30 -0.10 1.02	-1.75 -1.75 1.02	-0.02 -0.02 2.06	0.02 0.02 0.00	0.00 0.00 -1.36
13	10.48 7.08 -15.03	0.50E+06 85.92	2.00 2.07 0.00	0.30 -0.11 1.03	-1.72 -1.72 1.03	-0.02 -0.02 2.02	0.04 0.04 0.68	0.16 0.16 -1.32

PROPULSIVE WING FORCE DATA

SUMMARY, RUN 161

PT	Q ALPHA BETA	RET RD HEIGHT	CL15 CAF15 CNUC	CD15 CAF15 CNUN	CPM15 CPN15 CNUT	CBM15 CBN15 CLTR	CYM15 CYN15 CDTR	CSF15 CSF15 CNTR
1	5.17 7.00 15.01	0.30E+06 85.92	4.00 2.00 0.00	0.03 -0.52 2.00	-2.50 -2.52 2.00	-0.00 -0.01 2.39	-0.07 -0.07 0.00	-0.13 -0.13 -1.73
2	5.20 7.00 10.06	0.40E+06 85.92	4.02 3.00 0.00	0.03 -0.52 2.00	-2.54 -2.54 2.00	-0.00 -0.01 2.32	-0.06 -0.06 0.63	-0.00 -0.00 -1.74
3	5.20 7.07 7.00	0.40E+06 85.92	4.04 4.01 0.00	0.04 -0.52 2.07	-2.53 -2.53 2.07	-0.00 -0.01 2.34	-0.00 -0.00 0.63	-0.00 -0.00 -1.73
4	5.20 7.07 0.00	0.40E+06 85.92	4.02 3.00 0.00	0.03 -0.52 2.07	-2.52 -2.52 2.07	-0.00 -0.01 2.32	-0.00 -0.00 0.63	-0.00 -0.00 -1.72
5	5.00 7.07 4.03	0.40E+06 85.92	3.00 3.03 0.00	0.03 -0.51 2.04	-2.47 -2.47 2.04	-0.00 -0.01 2.30	-0.03 -0.03 0.61	-0.02 -0.02 -1.00
6	5.00 7.07 2.00	0.40E+06 85.92	3.00 3.03 0.00	0.03 -0.51 2.03	-2.40 -2.40 2.03	-0.00 -0.01 2.30	-0.03 -0.03 0.61	0.03 0.03 -1.07
7	5.17 7.07 -0.04	0.40E+06 85.92	4.15 4.11 0.00	0.03 -0.54 2.13	-2.30 -2.30 2.13	-0.02 -0.00 2.40	-0.02 -0.03 0.06	0.01 0.01 -1.70
8	5.17 7.00 -2.02	0.40E+06 85.92	4.00 4.04 0.00	0.02 -0.54 2.13	-2.56 -2.56 2.13	-0.03 -0.03 2.33	-0.00 -0.03 0.64	0.03 0.03 -1.73
9	5.20 7.05 -4.03	0.40E+06 85.92	4.04 4.00 0.00	0.03 -0.52 2.00	-2.55 -2.55 2.00	-0.03 -0.03 2.32	-0.01 -0.02 0.63	0.00 0.03 -1.73
10	5.17 7.00 -6.05	0.40E+06 85.92	4.10 4.00 0.00	0.03 -0.53 2.13	-2.50 -2.50 2.13	-0.03 -0.03 2.35	-0.01 -0.01 0.00	0.00 0.00 -1.74
11	5.17 7.00 -8.01	0.40E+06 85.92	4.05 4.01 0.00	0.02 -0.53 2.12	-2.54 -2.54 2.12	-0.03 -0.03 2.30	0.00 0.00 0.64	0.10 0.10 -1.71
12	5.20 7.00 -10.02	0.40E+06 85.92	3.07 3.04 0.00	0.02 -0.53 2.07	-2.40 -2.40 2.07	-0.03 -0.03 2.27	0.00 0.00 0.02	0.10 0.10 -1.00
13	5.17 7.00 -15.04	0.40E+06 85.92	4.01 3.07 0.00	0.00 -0.55 2.12	-2.53 -2.53 2.12	-0.03 -0.03 2.27	0.03 0.03 0.61	0.17 0.17 -1.71

PROPULSIVE WING FORCE DATA

SUMMARY, RUN 102

PT	Q ALPHA DELTA	REY NO HEIGHT	CL15 CSF16 CNWC	CD15 CSF16 CNWA	CPM15 CYN16 CNWT	CBM15 CBN16 CLTB	CYM15 CYN16 CDTB	CSF15 CSF16 CNTB
1	5.00		3.28	-0.00	-2.31	-0.02	-0.04	-0.10
	0.00	0.40E+06	3.28	-0.00	-2.31	-0.02	-0.06	-0.10
	14.00	85.04	0.00	2.03	2.03	1.74	0.51	-1.52
2	5.17		3.41	-0.52	-2.37	-0.02	-0.06	-0.06
	0.00	0.40E+06	3.41	-0.52	-2.37	-0.02	-0.06	-0.65
	10.00	85.04	0.00	2.13	2.13	1.79	0.53	-1.56
3	5.17		3.40	-0.51	-2.37	-0.02	-0.04	-0.02
	0.01	0.40E+06	3.40	-0.51	-2.37	-0.02	-0.04	-0.02
	7.00	85.04	0.00	2.13	2.13	1.79	0.55	-1.54
4	5.17		3.43	-0.51	-2.38	-0.02	-0.04	-0.01
	0.01	0.40E+06	3.43	-0.51	-2.38	-0.02	-0.04	-0.01
	5.00	85.04	0.00	2.13	2.13	1.81	0.54	-1.56
5	5.20		3.38	-0.48	-2.35	-0.02	-0.03	0.00
	0.01	0.40E+06	3.38	-0.48	-2.35	-0.02	-0.03	0.00
	4.00	85.04	0.00	2.07	2.07	1.79	0.54	-1.54
6	5.20		3.38	-0.48	-2.34	-0.02	-0.03	0.03
	0.01	0.40E+06	3.38	-0.48	-2.34	-0.02	-0.03	0.03
	2.00	85.04	0.00	2.08	2.08	1.80	0.54	-1.54
7	5.20		3.38	-0.50	-2.34	-0.02	-0.02	0.07
	0.01	0.40E+06	3.38	-0.50	-2.34	-0.02	-0.02	0.07
	0.00	85.04	0.00	2.08	2.08	1.80	0.53	-1.53
8	5.17		3.45	-0.51	-2.38	-0.02	-0.02	0.05
	0.02	0.40E+06	3.45	-0.51	-2.38	-0.02	-0.02	0.05
	-2.03	85.04	0.00	2.15	2.15	1.83	0.54	-1.56
9	5.20		3.35	-0.50	-2.32	-0.02	-0.02	0.07
	0.02	0.40E+06	3.35	-0.51	-2.32	-0.02	-0.02	0.07
	-4.01	85.04	0.00	2.07	2.07	1.75	0.53	-1.51
10	5.17		3.45	-0.51	-2.40	-0.02	-0.01	0.10
	0.02	0.40E+06	3.45	-0.51	-2.40	-0.02	-0.01	0.10
	-6.04	85.04	0.00	2.13	2.13	1.82	0.54	-1.57
11	5.17		3.42	-0.52	-2.38	-0.02	0.00	0.15
	0.02	0.40E+06	3.42	-0.52	-2.38	-0.02	0.00	0.15
	-8.03	85.04	0.00	2.14	2.14	1.78	0.54	-1.55
12	5.17		3.42	-0.52	-2.38	-0.02	0.00	0.14
	0.02	0.40E+06	3.42	-0.52	-2.38	-0.02	0.00	0.14
	-10.04	85.04	0.00	2.13	2.13	1.79	0.53	-1.55
13	5.20		3.38	-0.52	-2.35	-0.03	0.00	0.15
	0.02	0.40E+06	3.38	-0.52	-2.35	-0.03	0.00	0.15
	-15.04	85.04	0.00	2.08	2.08	1.77	0.51	-1.54

PROPULSIVE WING FORCE DATA

SUMMARY, RUN 103

PT	Q ALPHA DELTA	REY NO HEIGHT	CL15 CSF16 CNWC	CD15 CSF16 CNWA	CPM15 CYN16 CNWT	CBM15 CBN16 CLTB	CYM15 CYN16 CDTB	CSF15 CSF16 CNTB
15	29.00		0.38	0.11	-0.28	0.00	0.00	0.01
	-2.00	0.95E+06	0.38	0.13	-0.28	0.00	0.00	0.01
	-0.01	87.77	0.00	0.00	0.00	0.37	0.13	-0.26
16	30.23		0.47	0.12	-0.28	0.00	0.00	0.01
	0.01	0.90E+06	0.47	0.12	-0.28	0.00	0.00	0.01
	-0.01	85.70	0.00	0.00	0.00	0.45	0.14	-0.27
17	30.00		0.55	0.14	-0.28	0.00	0.00	0.01
	2.00	0.95E+06	0.55	0.12	-0.28	0.00	0.00	0.01
	-0.01	86.26	0.00	0.00	0.00	0.53	0.16	-0.28
18	29.00		0.64	0.10	-0.31	0.00	0.00	0.01
	4.03	0.95E+06	0.65	0.11	-0.31	0.00	0.00	0.01
	-0.01	86.87	0.00	0.00	0.00	0.59	0.17	-0.30
19	29.77		0.74	0.15	-0.33	0.00	0.00	0.00
	6.13	0.95E+06	0.75	0.10	-0.33	0.00	0.00	0.00
	-0.01	86.50	0.00	0.00	0.00	0.73	0.20	-0.32
20	29.77		0.82	0.20	-0.35	0.00	0.00	0.01
	8.04	0.95E+06	0.84	0.00	-0.35	0.00	0.00	0.01
	-0.01	84.03	0.00	0.00	0.00	0.80	0.22	-0.33
21	30.00		0.92	0.24	-0.37	0.00	0.00	0.00
	10.04	0.95E+06	0.95	0.00	-0.37	0.00	0.00	0.00
	-0.01	84.81	0.00	0.00	0.00	0.90	0.25	-0.36
22	30.1[illegible]		1.04	0.20	-0.41	0.00	0.00	0.01
	12.0[illegible]	0.95E+06	1.06	0.07	-0.41	0.00	0.00	0.01
	-0.01	84.75	0.00	0.00	0.00	1.02	0.31	-0.38
23	30.00		1.11	0.35	-0.42	0.00	0.00	0.00
	14.03	0.95E+06	1.16	0.07	-0.42	0.00	0.00	0.00
	-0.01	85.82	0.00	0.00	0.00	1.08	0.37	-0.40
24	29.00		1.18	0.42	-0.43	0.00	0.00	0.00
	16.00	0.95E+06	1.23	0.08	-0.43	0.00	0.00	0.00
	-0.01	85.81	0.00	0.00	0.00	1.14	0.44	-0.41
25	29.00		1.20	0.50	-0.45	0.00	0.00	0.01
	18.05	0.95E+06	1.30	0.10	-0.45	0.00	0.00	0.01
	-0.01	83.30	0.00	0.00	0.00	1.18	0.51	-0.44
26	29.00		1.21	0.55	-0.48	0.00	0.00	-0.01
	19.97	0.95E+06	1.33	0.11	-0.48	0.00	0.00	-0.01
	-0.01	80.45	0.00	0.00	0.00	1.18	0.57	-0.47
27	30.23		1.17	0.00	-0.47	0.00	0.00	0.00
	21.86	0.90E+06	1.30	0.12	-0.47	0.01	0.00	0.00
	-0.01	97.73	0.00	0.00	0.00	1.14	0.61	-0.46

PROPULSIVE WING FORCE DATA

SUMMARY, RUN 104

PT	Q ALPHA BETA	REY NO HEIGHT	CL15 CAF10 CNWC	CD15 CAF10 CNWH	CPM15 CPN10 CNUT	CBM15 CBN10 CLTR	CYM15 CYN10 CDTR	CSF15 CSF10 CNTR
1	30.00 -2.02 5.00	0.90E+06 84.23	0.00 0.30 0.00	0.11 0.12 0.00	-0.20 -0.28 0.00	0.00 0.00 0.36	0.00 0.00 0.13	-0.05 -0.05 -0.26
2	29.00 0.01 5.00	0.95E+06 80.50	0.47 0.47 0.00	0.12 0.12 0.00	-0.29 -0.29 0.00	0.00 0.00 0.45	0.00 0.00 0.14	-0.05 -0.05 -0.27
3	29.00 2.03 5.00	0.90E+06 83.73	0.56 0.57 0.00	0.14 0.12 0.00	-0.30 -0.30 0.00	0.00 0.00 0.54	0.00 0.00 0.15	-0.05 -0.05 -0.30
4	29.00 4.00 5.00	0.95E+06 86.33	0.55 0.58 0.00	0.16 0.11 0.00	-0.32 -0.32 0.00	-0.01 0.00 0.63	0.00 0.00 0.17	-0.05 -0.05 -0.31
5	30.25 6.05 5.00	0.90E+06 88.04	0.73 0.75 0.00	0.18 0.18 0.00	-0.34 -0.34 0.00	0.00 0.00 0.71	0.00 0.00 0.19	-0.06 -0.06 -0.32
6	30.12 8.05 5.00	0.90E+06 85.54	0.83 0.85 0.00	0.20 0.00 0.00	-0.36 -0.35 0.00	0.00 0.00 0.81	0.00 0.00 0.22	-0.06 -0.06 -0.34
7	30.12 10.03 5.00	0.95E+06 88.58	0.92 0.94 0.00	0.23 0.07 0.00	-0.37 -0.37 0.00	0.00 0.00 0.88	-0.01 -0.01 0.25	-0.06 -0.06 -0.35
8	30.00 12.07 5.00	0.95E+06 88.99	1.03 1.07 0.00	0.28 0.07 0.00	-0.40 -0.40 0.00	-0.01 0.00 1.01	-0.01 -0.01 0.31	-0.06 -0.06 -0.38
9	29.77 14.04 5.00	0.95E+06 85.40	1.11 1.18 0.00	0.35 0.07 0.00	-0.42 -0.42 0.00	-0.01 -0.01 1.08	-0.01 -0.02 0.35	-0.06 -0.06 -0.40
10	30.12 16.03 5.00	0.95E+06 88.52	1.15 1.23 0.00	0.42 0.08 0.00	-0.43 -0.43 0.00	-0.01 -0.01 1.13	-0.01 -0.02 0.43	-0.06 -0.06 -0.41
11	30.00 18.02 5.00	0.95E+06 85.55	1.17 1.26 0.00	0.48 0.10 0.00	-0.44 -0.44 0.00	-0.01 0.00 1.15	-0.02 -0.02 0.48	-0.07 -0.07 -0.42
12	30.23 20.08 5.00	0.95E+06 80.84	1.17 1.28 0.00	0.54 0.10 0.00	-0.46 -0.46 0.00	-0.02 -0.01 1.15	-0.02 -0.02 0.55	-0.06 -0.06 -0.44
13	30.12 22.11 5.00	0.95E+06 88.20	1.13 1.27 0.00	0.58 0.11 0.00	-0.45 -0.45 0.00	-0.03 -0.02 1.10	-0.02 -0.03 0.58	-0.04 -0.04 -0.43

PROPULSIVE WING FORCE DATA

SUMMARY, RUN 105

PT	Q ALPHA BETA	REY NO HEIGHT	CL15 CAF10 CNWC	CD15 CAF10 CNWH	CPM15 CPN10 CNUT	CBM15 CBN10 CLTR	CYM15 CYN10 CDTR	CSF15 CSF10 CNTR
1	29.88 -0.03 15.01	0.95E+06 88.71	0.46 -0.46 0.00	0.12 0.12 0.00	-0.26 -0.26 0.00	-0.01 -0.01 0.44	-0.01 -0.01 0.14	-0.17 -0.17 -0.27
2	30.12 -0.02 10.01	0.95E+06 88.71	0.47 0.47 0.00	0.12 0.12 0.00	-0.29 -0.29 0.00	-0.01 -0.01 0.45	0.00 0.00 0.14	-0.12 -0.12 -0.27
3	30.23 -0.02 7.00	0.95E+06 88.71	0.47 0.47 0.00	0.12 0.12 0.00	-0.30 -0.30 0.00	-0.01 -0.01 0.45	0.00 0.00 0.14	-0.00 -0.00 -0.27
4	30.12 -0.02 5.00	0.95E+06 88.71	0.47 0.47 0.00	0.12 0.12 0.00	-0.29 -0.29 0.00	0.00 0.00 0.45	0.00 0.00 0.14	-0.00 -0.00 -0.27
5	30.12 -0.01 4.00	0.95E+06 88.71	0.47 0.47 0.00	0.12 0.12 0.00	-0.28 -0.28 0.00	0.00 0.00 0.45	0.00 0.00 0.14	-0.03 -0.03 -0.27
6	30.00 -0.01 1.07	0.95E+06 88.71	0.48 0.48 0.00	0.12 0.12 0.00	-0.29 -0.29 0.00	0.00 0.00 0.46	-0.01 -0.01 0.14	-0.02 -0.02 -0.28
7	30.12 -0.01 0.00	0.95E+06 88.71	0.47 0.47 0.00	0.12 0.12 0.00	-0.28 -0.28 0.00	0.00 0.00 0.45	0.00 0.00 0.14	0.01 0.01 -0.27
8	30.12 -0.01 -2.00	0.95E+06 88.71	0.47 0.47 0.00	0.12 0.12 0.00	-0.28 -0.28 0.00	0.00 0.00 0.44	0.00 0.00 0.14	0.03 0.03 -0.27
9	30.00 0.00 -4.01	0.95E+06 88.71	0.47 0.47 0.00	0.12 0.12 0.00	-0.29 -0.29 0.00	0.01 0.01 0.45	0.00 0.00 0.14	0.06 0.06 -0.27
10	30.12 0.00 -6.01	0.95E+06 88.71	0.47 0.47 0.00	0.12 0.12 0.00	-0.29 -0.29 0.00	0.01 0.01 0.45	0.00 0.00 0.14	0.08 0.08 -0.27
11	29.88 0.00 -8.01	0.95E+06 88.71	0.48 0.48 0.00	0.12 0.12 0.00	-0.29 -0.29 0.00	0.01 0.01 0.46	0.00 0.00 0.14	0.10 0.10 -0.28
12	30.00 0.00 -10.03	0.95E+06 88.71	0.47 0.47 0.00	0.12 0.12 0.00	-0.29 -0.29 0.00	0.01 0.01 0.45	0.00 0.00 0.14	0.13 0.13 -0.27
13	30.12 0.00 -15.02	0.95E+06 88.71	0.46 0.46 0.00	0.11 0.11 0.00	-0.28 -0.28 0.00	0.01 0.01 0.44	0.00 0.00 0.13	0.16 0.16 -0.27

PROPULSIVE WING FORCE DATA

SUMMARY, RUN 166

PT	Q ALPHA BETA	REY NO HEIGHT	CLIS CNFIB CNUC	CDIS CAFIB CNUW	CPMIS CPMIB CMUT	CMMIS CMMIB CLTR	CYMIS CYMIB CDTR	CSFIS CSFIB CNTR
1	29.88		0.82	0.20	-0.36	-0.01	-0.01	-0.20
	8.07	0.95E+06	0.84	0.08	-0.36	-0.01	-0.01	-0.20
	15.02	88.14	0.00	0.00	0.00	0.79	0.21	-0.34
2	30.23		0.83	0.20	-0.35	-0.01	-0.01	-0.13
	8.09	0.96E+06	0.85	0.08	-0.35	-0.01	-0.01	-0.13
	10.01	88.14	0.00	0.00	0.00	0.80	0.22	-0.33
3	29.88		0.85	0.20	-0.37	-0.01	0.00	-0.10
	8.09	0.95E+06	0.87	0.08	-0.37	0.00	0.00	-0.10
	8.00	88.14	0.00	0.00	0.00	0.83	0.22	-0.36
4	29.88		0.84	0.20	-0.36	0.00	0.00	-0.07
	8.10	0.95E+06	0.86	0.08	-0.36	0.00	0.00	-0.07
	6.00	88.14	0.00	0.00	0.00	0.81	0.22	-0.35
5	29.77		0.84	0.21	-0.36	0.00	-0.01	-0.04
	8.10	0.95E+06	0.86	0.09	-0.36	0.00	-0.01	-0.04
	3.99	88.14	0.00	0.00	0.00	0.81	0.22	-0.35
6	29.88		0.83	0.20	-0.36	0.00	0.00	-0.02
	8.11	0.95E+06	0.85	0.08	-0.36	0.00	0.00	-0.02
	1.98	88.14	0.00	0.00	0.00	0.81	0.22	-0.34
7	29.88		0.83	0.21	-0.35	0.00	0.00	0.01
	8.12	0.95E+06	0.85	0.08	-0.35	0.00	0.00	0.01
	-0.01	88.14	0.00	0.00	0.00	0.80	0.22	-0.33
8	29.77		0.83	0.21	-0.36	0.00	0.00	0.03
	8.11	0.95E+06	0.85	0.08	-0.36	0.00	0.00	0.03
	-2.02	88.14	0.00	0.00	0.00	0.81	0.22	-0.34
9	29.88		0.82	0.20	-0.35	0.01	0.00	0.05
	8.12	0.95E+06	0.84	0.08	-0.35	0.01	0.00	0.05
	-4.00	88.14	0.00	0.00	0.00	0.80	0.22	-0.33
10	30.00		0.84	0.20	-0.36	0.01	0.00	0.08
	8.12	0.95E+06	0.86	0.08	-0.36	0.01	0.00	0.08
	-6.00	88.14	0.00	0.00	0.00	0.81	0.22	-0.35
11	30.12		0.84	0.20	-0.36	0.01	0.00	0.11
	8.12	0.95E+06	0.86	0.08	-0.36	0.01	0.00	0.11
	-8.00	88.14	0.00	0.00	0.00	0.82	0.22	-0.35
12	30.00		0.85	0.20	-0.38	0.01	0.00	0.13
	8.12	0.95E+06	0.87	0.08	-0.38	0.01	0.00	0.13
	-10.00	88.14	0.00	0.00	0.00	0.83	0.22	-0.36
13	29.88		0.82	0.19	-0.35	0.01	0.01	0.21
	8.12	0.95E+06	0.83	0.08	-0.35	0.01	0.01	0.21
	-15.02	88.14	0.00	0.00	0.00	0.79	0.21	-0.34

PROPULSIVE WING FORCE DATA

SUMMARY, RUN 167

PT	Q ALPHA BETA	REY NO HEIGHT	CLIS CNFIB CNUC	CDIS CAFIB CNUW	CPMIS CPMIB CMUT	CMMIS CMMIB CLTR	CYMIS CYMIB CDTR	CSFIS CSFIB CNTR
1	16.67		2.15	0.38	-1.25	0.01	-0.01	-0.25
	7.85	0.71E+06	2.18	0.09	-1.25	0.01	-0.01	-0.25
	15.01	88.14	0.00	0.48	0.48	1.77	0.57	-1.07
2	16.86		2.18	0.40	-1.24	0.01	0.00	-0.18
	7.86	0.72E+06	2.20	0.10	-1.24	0.01	0.00	-0.18
	9.99	88.14	0.00	0.48	0.48	1.81	0.57	-1.07
3	16.90		2.22	0.40	-1.28	0.01	0.00	-0.15
	7.85	0.72E+06	2.25	0.09	-1.28	0.01	0.00	-0.15
	7.99	88.14	0.00	0.48	0.48	1.84	0.58	-1.10
4	16.78		2.23	0.40	-1.29	0.01	0.00	-0.12
	7.85	0.72E+06	2.27	0.09	-1.29	0.01	0.00	-0.12
	6.01	88.14	0.00	0.48	0.48	1.85	0.58	-1.11
5	16.78		2.23	0.40	-1.28	0.00	0.00	-0.07
	7.86	0.72E+06	2.26	0.09	-1.28	0.00	0.00	-0.07
	3.99	88.14	0.00	0.48	0.48	1.85	0.58	-1.10
6	16.90		2.22	0.41	-1.28	0.00	-0.01	-0.04
	7.86	0.72E+06	2.26	0.10	-1.28	0.00	-0.01	-0.04
	2.01	88.14	0.00	0.48	0.48	1.84	0.58	-1.10
7	16.67		2.25	0.41	-1.30	-0.01	0.00	-0.01
	7.86	0.71E+06	2.28	0.10	-1.30	-0.01	-0.01	-0.01
	0.00	88.14	0.00	0.49	0.49	1.86	0.60	-1.12
8	16.67		2.27	0.42	-1.31	-0.01	-0.01	0.04
	7.86	0.71E+06	2.31	0.10	-1.31	-0.01	-0.01	0.04
	-2.06	88.14	0.00	0.49	0.49	1.88	0.61	-1.13
9	16.55		2.28	0.42	-1.33	-0.01	-0.01	0.08
	7.86	0.71E+06	2.31	0.10	-1.33	-0.01	-0.01	0.08
	-4.07	88.14	0.00	0.50	0.50	1.89	0.61	-1.14
10	16.67		2.25	0.41	-1.31	-0.01	-0.02	0.12
	7.87	0.71E+06	2.29	0.10	-1.31	-0.01	-0.02	0.12
	-6.01	88.14	0.00	0.49	0.49	1.86	0.60	-1.12
11	16.55		2.26	0.41	-1.31	-0.01	-0.02	0.15
	7.87	0.71E+06	2.29	0.10	-1.31	-0.01	-0.02	0.15
	-8.00	88.14	0.00	0.49	0.49	1.86	0.60	-1.12
12	16.55		2.22	0.41	-1.29	-0.01	-0.01	0.18
	7.88	0.71E+06	2.26	0.10	-1.29	-0.01	-0.02	0.18
	-10.02	88.14	0.00	0.48	0.48	1.84	0.60	-1.10
13	16.44		2.13	0.40	-1.23	-0.01	0.00	0.20
	7.90	0.71E+06	2.16	0.10	-1.23	-0.01	0.00	0.25
	-15.01	88.17	0.00	0.47	0.47	1.76	0.58	-1.06

PROPULSIVE WING FORCE DATA

SUMMARY, RUN 108

PT	Q ALPHA BETA	REY NO HEIGHT	CL1S CNF1B CNUC	CD1S CAF1B CNUN	CPN1S CPN1B CNUT	CMN1S CMN1B CLTR	CYN1S CYN1B CDTR	CSF1S CSF1B CNTR
1	16.87		1.00	0.14	-1.11	0.00	0.00	-0.21
	0.01	0.71E+06	1.00	0.14	-1.11	0.00	0.00	-0.21
	15.01	88.32	0.00	0.48	0.48	1.34	0.37	-0.93
2	16.90		1.73	0.14	-1.13	-0.01	0.01	-0.16
	0.01	0.72E+06	1.73	0.14	-1.13	-0.01	0.01	-0.16
	9.99	88.32	0.00	0.47	0.47	1.39	0.37	-0.95
3	16.78		1.75	0.14	-1.14	-0.01	0.01	-0.13
	0.01	0.72E+06	1.75	0.14	-1.14	-0.01	0.01	-0.13
	8.00	88.32	0.00	0.47	0.47	1.40	0.38	-0.96
4	16.78		1.74	0.14	-1.14	-0.01	0.00	-0.09
	0.02	0.72E+06	1.74	0.14	-1.14	-0.01	0.00	-0.09
	6.00	88.32	0.00	0.48	0.48	1.40	0.38	-0.96
5	16.78		1.73	0.15	-1.14	-0.01	0.00	-0.05
	0.02	0.72E+06	1.73	0.15	-1.14	-0.01	0.00	-0.05
	4.00	88.32	0.00	0.48	0.48	1.38	0.38	-0.96
6	16.78		1.73	0.15	-1.14	0.00	0.00	-0.03
	0.02	0.72E+06	1.73	0.15	-1.14	0.00	0.00	-0.03
	2.01	88.32	0.00	0.48	0.48	1.38	0.38	-0.96
7	16.87		1.75	0.15	-1.15	0.00	-0.01	0.01
	0.02	0.71E+06	1.75	0.15	-1.15	0.00	-0.01	0.01
	-0.06	88.32	0.00	0.49	0.49	1.40	0.38	-0.96
8	16.55		1.76	0.15	-1.15	0.00	-0.01	0.05
	0.02	0.71E+06	1.76	0.15	-1.15	0.00	-0.01	0.05
	-2.01	88.32	0.00	0.48	0.49	1.40	0.39	-0.97
9	16.44		1.76	0.14	-1.16	0.00	-0.02	0.08
	0.02	0.71E+06	1.76	0.14	-1.16	0.00	-0.02	0.08
	-4.00	88.32	0.00	0.49	0.49	1.40	0.38	-0.97
10	16.44		1.76	0.14	-1.16	0.00	-0.02	0.11
	0.03	0.71E+06	1.76	0.14	-1.16	0.00	-0.02	0.11
	-6.03	88.32	0.00	0.49	0.49	1.40	0.38	-0.97
11	16.87		1.74	0.14	-1.14	0.00	-0.03	0.14
	0.03	0.71E+06	1.74	0.14	-1.14	0.00	-0.03	0.14
	-8.01	88.32	0.00	0.48	0.48	1.39	0.38	-0.96
12	16.87		1.75	0.14	-1.14	-0.01	-0.03	0.18
	0.03	0.71E+06	1.75	0.14	-1.14	-0.01	-0.03	0.18
	-10.01	88.32	0.00	0.48	0.49	1.40	0.38	-0.96
13	16.87		1.68	0.14	-1.10	-0.01	-0.01	0.21
	0.05	0.71E+06	1.68	0.14	-1.10	-0.01	-0.01	0.21
	-15.02	88.32	0.00	0.48	0.48	1.33	0.37	-0.82

PROPULSIVE WING FORCE DATA

SUMMARY, RUN 109

PT	Q ALPHA BETA	REY NO HEIGHT	CL1S CNF1B CNUC	CD1S CAF1B CNUN	CPN1S CPN1B CNUT	CMN1S CMN1B CLTR	CYN1S CYN1B CDTR	CSF1S CSF1B CNTR
1	16.87		1.82	0.09	-1.10	-0.01	-0.01	-0.07
	-2.03	0.71E+06	1.82	0.15	-1.10	-0.01	-0.01	-0.07
	5.00	88.38	0.00	0.47	0.47	1.29	0.33	-0.93
2	16.55		1.74	0.14	-1.14	-0.01	-0.01	-0.07
	0.02	0.71E+06	1.74	0.14	-1.14	-0.01	-0.01	-0.07
	5.00	88.04	0.00	0.47	0.47	1.40	0.38	-0.96
3	16.55		1.88	0.20	-1.17	-0.01	0.00	-0.06
	2.00	0.71E+06	1.88	0.13	-1.17	-0.01	0.00	-0.06
	5.00	88.05	0.00	0.47	0.47	1.50	0.42	-0.98
4	16.55		1.97	0.26	-1.21	0.00	0.00	-0.06
	4.13	0.71E+06	1.98	0.12	-1.21	0.00	0.00	-0.06
	5.00	88.80	0.00	0.47	0.47	1.81	0.47	-1.03
5	16.44		2.11	0.33	-1.24	0.01	0.00	-0.08
	6.08	0.71E+06	2.13	0.11	-1.24	0.01	0.00	-0.08
	5.00	84.21	0.00	0.48	0.48	1.73	0.53	-1.06
6	16.44		2.22	0.41	-1.27	0.01	0.00	-0.08
	8.00	0.71E+06	2.25	0.10	-1.27	0.01	0.00	-0.08
	5.00	84.75	0.00	0.47	0.47	1.84	0.59	-1.09
7	16.44		2.37	0.50	-1.31	0.01	0.00	-0.09
	10.10	0.71E+06	2.42	0.08	-1.31	0.01	0.00	-0.09
	5.00	84.58	0.00	0.47	0.47	1.98	0.67	-1.13
8	16.21		2.48	0.60	-1.33	0.01	-0.01	-0.10
	12.04	0.70E+06	2.55	0.06	-1.33	0.01	-0.01	-0.10
	5.00	88.96	0.00	0.48	0.48	2.06	0.76	-1.15
9	16.08		2.84	0.71	-1.39	0.01	-0.01	-0.10
	14.08	0.70E+06	2.73	0.05	-1.39	0.01	-0.01	-0.10
	5.00	85.79	0.00	0.49	0.49	2.24	0.86	-1.20
10	15.98		2.72	0.81	-1.40	0.01	-0.01	-0.11
	16.08	0.70E+06	2.84	0.03	-1.40	0.01	-0.01	-0.11
	5.00	85.76	0.00	0.48	0.48	2.30	0.95	-1.22
11	15.98		2.76	0.91	-1.39	0.01	-0.02	-0.11
	17.99	0.70E+06	2.90	0.01	-1.39	0.01	-0.01	-0.11
	5.00	85.45	0.00	0.49	0.49	2.34	1.03	-1.20
12	15.98		2.82	1.02	-1.40	0.01	-0.02	-0.11
	20.01	0.70E+06	3.00	-0.01	-1.40	0.01	-0.02	-0.11
	5.00	91.57	0.00	0.49	0.49	2.40	1.12	-1.21
13	15.75		2.88	1.16	-1.40	0.01	-0.03	-0.12
	22.25	0.69E+06	3.12	-0.02	-1.40	0.02	-0.03	-0.12
	5.00	99.82	0.00	0.49	0.49	2.48	1.25	-1.21

PROPULSIVE WING FORCE DATA

SUMMARY, RUN 170

PT	Q ALPHA BETA	REY NO HEIGHT	CL15 CNF16 CNWC	CD15 CAF16 CNWW	CPM15 CPM16 CMWT	CNM15 CNM16 CLTR	CYM15 CYM16 CDTR	CSF15 CSF16 CNTR
1	10.78		1.83	0.06	-1.11	0.00	-0.01	0.03
	-2.07	0.72E+06	1.83	0.14	-1.11	0.00	-0.01	0.03
	0.00	84.25	0.00	0.47	0.47	1.30	0.33	-0.93
2	10.87		1.73	0.14	-1.15	0.00	-0.01	0.02
	-0.02	0.72E+06	1.73	0.14	-1.15	0.00	-0.01	0.02
	0.00	87.78	0.00	0.47	0.47	1.38	0.37	-0.97
3	10.78		1.85	0.20	-1.17	0.00	-0.01	0.03
	2.02	0.72E+06	1.85	0.13	-1.17	0.00	-0.01	0.02
	0.00	83.71	0.00	0.47	0.47	1.40	0.42	-0.99
4	10.87		1.90	0.26	-1.21	0.00	-0.01	0.01
	4.06	0.72E+06	2.00	0.12	-1.21	0.00	-0.01	0.01
	0.00	88.81	0.00	0.47	0.47	1.62	0.47	-1.02
5	10.95		2.10	0.33	-1.24	0.00	-0.01	0.01
	5.94	0.71E+06	2.12	0.11	-1.24	0.00	-0.01	0.01
	0.00	83.30	0.00	0.47	0.47	1.72	0.53	-1.06
6	10.44		2.26	0.42	-1.30	0.00	-0.01	0.01
	8.00	0.71E+06	2.32	0.10	-1.30	0.00	-0.01	0.01
	0.00	89.82	0.00	0.48	0.48	1.90	0.81	-1.12
7	10.32		2.41	0.51	-1.33	0.00	-0.01	0.02
	10.07	0.71E+06	2.46	0.08	-1.33	0.00	-0.01	0.02
	0.00	89.30	0.00	0.48	0.48	2.01	0.90	-1.14
8	10.44		2.55	0.62	-1.38	0.00	-0.01	0.01
	12.07	0.71E+06	2.62	0.07	-1.38	0.00	-0.01	0.01
	0.00	88.11	0.00	0.48	0.48	2.15	0.78	-1.19
9	10.44		2.65	0.72	-1.38	0.00	-0.01	0.01
	14.00	0.71E+06	2.74	0.05	-1.38	0.01	-0.01	0.01
	0.00	85.50	0.00	0.48	0.48	2.25	0.88	-1.10
10	10.44		2.71	0.81	-1.38	0.00	-0.01	0.01
	16.03	0.71E+06	2.83	0.03	-1.38	0.01	-0.01	0.01
	0.00	80.45	0.00	0.48	0.48	2.30	0.95	-1.21
11	10.32		2.77	0.92	-1.40	0.00	-0.01	0.00
	16.93	0.71E+06	2.82	0.02	-1.40	0.01	-0.01	0.00
	0.00	85.63	0.00	0.48	0.48	2.36	1.04	-1.22
12	10.44		2.85	1.04	-1.41	0.00	-0.01	0.00
	20.10	0.71E+06	2.84	0.00	-1.41	0.01	-0.01	0.00
	0.00	91.80	0.00	0.48	0.48	2.44	1.15	-1.23
13	10.78		2.88	1.15	-1.40	0.01	-0.01	0.00
	22.08	0.72E+06	3.10	-0.01	-1.40	0.01	-0.01	0.00
	0.50	98.75	0.00	0.47	0.47	2.47	1.24	-1.21

PROPULSIVE WING FORCE DATA

SUMMARY, RUN 171

PT	Q ALPHA BETA	REY NO HEIGHT	CL15 CNF16 CNWC	CD15 CAF16 CNWW	CPM15 CPM16 CMWT	CNM15 CNM16 CLTR	CYM15 CYM16 CDTR	CSF15 CSF16 CNTR
1	10.50		2.23	-0.13	-1.55	-0.01	-0.01	0.03
	-2.01	0.57E+06	2.24	-0.05	-1.55	-0.01	-0.01	0.03
	0.00	88.53	0.00	1.01	1.01	1.46	0.40	-1.16
2	10.45		2.30	-0.07	-1.61	-0.01	-0.01	0.02
	0.02	0.57E+06	2.35	-0.07	-1.61	-0.01	-0.01	0.02
	0.00	85.85	0.00	1.05	1.05	1.50	0.45	-1.20
3	10.40		2.40	0.01	-1.64	0.01	-0.01	0.02
	2.06	0.57E+06	2.49	-0.08	-1.64	-0.01	-0.01	0.02
	0.00	85.33	0.00	1.03	1.03	1.58	0.50	-1.23
4	10.40		2.60	0.12	-1.65	-0.01	-0.01	0.01
	4.01	0.57E+06	2.60	-0.06	-1.65	-0.01	-0.01	0.01
	0.00	88.03	0.00	0.99	0.99	1.80	0.56	-1.26
5	10.35		2.93	0.33	-1.77	-0.01	-0.01	0.01
	5.00	0.57E+06	2.95	-0.08	-1.77	-0.01	-0.01	0.01
	0.00	88.87	0.00	1.02	1.02	2.06	0.72	-1.37
6	10.40		3.10	0.45	-1.81	-0.01	-0.01	0.02
	10.06	0.57E+06	3.13	-0.10	-1.81	0.00	-0.01	0.02
	0.00	89.82	0.00	1.02	1.02	2.24	0.81	-1.41
7	10.40		3.19	0.58	-1.84	0.00	-0.01	0.01
	12.06	0.57E+06	3.24	-0.12	-1.84	0.00	-0.02	0.01
	0.00	88.03	0.00	1.01	1.01	2.32	0.90	-1.44
8	10.40		3.32	0.68	-1.85	0.00	-0.02	0.02
	13.08	0.57E+06	3.39	-0.13	-1.85	0.00	-0.02	0.02
	0.00	88.91	0.00	1.02	1.02	2.44	1.00	-1.45
9	10.00		3.34	0.80	-1.83	0.00	-0.01	-0.01
	15.00	0.57E+06	3.43	-0.15	-1.83	0.00	-0.01	-0.01
	0.00	88.70	0.00	0.99	0.99	2.46	1.07	-1.43
10	10.58		3.47	0.95	-1.88	0.00	-0.01	-0.01
	18.08	0.57E+06	3.50	-0.17	-1.88	0.01	-0.01	-0.01
	0.00	88.74	0.00	1.01	1.01	2.57	1.10	-1.46
11	10.25		3.50	1.10	-1.92	0.01	-0.01	0.00
	20.04	0.57E+06	3.75	-0.20	-1.92	0.01	-0.01	0.00
	0.00	91.93	0.00	1.03	1.03	2.67	1.31	-1.52
12	10.58		3.57	1.22	-1.87	0.01	-0.02	-0.01
	22.06	0.57E+06	3.77	-0.21	-1.87	0.01	-0.01	-0.01
	0.00	99.14	0.00	1.00	1.00	2.85	1.40	-1.47

PROPULSIVE WING FORCE DATA

SUMMARY, RUN 172

PT	Q ALPHA BETA	REY NO HEIGHT	CL1S CNF1B CNUC	CD1S CAF1B CNUN	CPM1S CPM1B CMUT	CRM1S CRM1B CLTR	CYM1S CYM1B CDTR	CSF1S CSF1B CNTR
1	11.38		2.13	-0.11	-1.50	-0.01	0.00	-0.07
	-2.03	0.50E+06	2.14	-0.03	-1.50	-0.01	0.00	-0.07
	5.01	88.63	0.00	0.03	0.03	1.43	0.39	-1.13
2	11.15		2.32	-0.03	-1.57	-0.01	0.00	-0.08
	0.11	0.50E+06	2.32	-0.03	-1.57	-0.01	0.00	-0.08
	5.01	87.01	0.00	0.05	0.05	1.56	0.45	-1.19
3	11.50		2.37	0.04	-1.56	-0.01	0.00	-0.08
	2.00	0.60E+06	2.37	-0.04	-1.56	-0.01	0.00	-0.08
	5.01	87.03	0.00	0.02	0.02	1.64	0.48	-1.19
4	10.81		2.57	0.11	-1.64	-0.01	0.00	-0.10
	4.07	0.50E+06	2.57	-0.07	-1.64	-0.01	0.00	-0.10
	5.01	85.84	0.00	0.09	0.09	1.77	0.55	-1.25
5	10.58		2.75	0.21	-1.70	0.00	0.00	-0.08
	6.03	0.57E+06	2.76	-0.08	-1.70	0.00	0.00	-0.08
	5.01	85.01	0.00	1.00	1.00	1.92	0.63	-1.30
6	10.48		2.90	0.31	-1.75	0.00	0.00	-0.10
	8.07	0.57E+06	2.92	-0.10	-1.75	0.00	0.00	-0.10
	5.01	88.12	0.00	1.01	1.01	2.05	0.71	-1.35
7	10.48		3.04	0.42	-1.78	0.00	0.00	-0.11
	10.01	0.57E+06	3.07	-0.11	-1.78	0.00	0.00	-0.11
	5.01	85.50	0.00	1.02	1.02	2.17	0.79	-1.38
8	10.48		3.20	0.55	-1.83	0.00	-0.01	-0.11
	12.06	0.57E+06	3.24	-0.13	-1.83	0.01	-0.01	-0.11
	5.01	85.73	0.00	1.02	1.02	2.31	0.88	-1.43
9	10.48		3.28	0.68	-1.82	0.01	-0.01	-0.13
	14.08	0.57E+06	3.32	-0.15	-1.82	0.01	-0.01	-0.13
	5.01	85.82	0.00	1.02	1.02	2.37	0.97	-1.42
10	10.35		3.41	0.81	-1.87	0.01	-0.01	-0.13
	16.10	0.57E+06	3.50	-0.17	-1.87	0.01	-0.01	-0.13
	5.01	84.84	0.00	1.03	1.03	2.50	1.08	-1.46
11	10.23		3.45	0.92	-1.88	0.01	-0.02	-0.14
	18.07	0.50E+06	3.57	-0.20	-1.88	0.02	-0.02	-0.14
	5.01	85.83	0.00	1.04	1.04	2.52	1.17	-1.44
12	10.35		3.55	1.10	-1.88	0.01	-0.02	-0.15
	20.05	0.57E+06	3.72	-0.18	-1.88	0.02	-0.02	-0.15
	5.01	91.86	0.00	0.98	0.98	2.86	1.31	-1.48
13	10.48		3.57	1.22	-1.85	0.01	-0.03	-0.14
	22.13	0.57E+06	3.77	-0.22	-1.85	0.02	-0.03	-0.14
	5.01	99.43	0.00	1.01	1.01	2.85	1.40	-1.45

PROPULSIVE WING FORCE DATA

SUMMARY, RUN 172

PT	Q ALPHA BETA	REY NO HEIGHT	CL1S CNF1B CNUC	CD1S CAF1B CNUN	CPM1S CPM1B CMUT	CRM1S CRM1B CLTR	CYM1S CYM1B CDTR	CSF1S CSF1B CNTR
2	10.58		2.20	-0.06	-1.54	-0.01	-0.02	0.24
	0.00	0.57E+06	2.20	-0.06	-1.54	-0.01	-0.02	0.24
	-15.01	90.81	0.00	1.04	1.04	1.50	0.43	-1.15
3	10.58		2.25	-0.07	-1.50	0.00	-0.03	0.10
	-0.02	0.57E+06	2.25	-0.07	-1.50	0.00	-0.03	0.10
	-10.02	90.81	0.00	1.04	1.04	1.56	0.44	-1.10
4	10.58		2.37	-0.07	-1.00	0.00	-0.02	0.15
	-0.02	0.57E+06	2.37	-0.07	-1.00	0.00	-0.02	0.15
	-8.01	90.81	0.00	1.04	1.04	1.56	0.44	-1.20
5	10.58		2.32	-0.05	-1.57	0.00	-0.02	0.11
	-0.01	0.57E+06	2.32	-0.05	-1.57	0.00	-0.02	0.11
	-6.00	90.85	0.00	1.01	1.01	1.55	0.45	-1.18
6	10.58		2.33	-0.05	-1.56	-0.01	-0.02	0.08
	-0.01	0.57E+06	2.33	-0.05	-1.56	-0.01	-0.02	0.08
	-4.01	90.85	0.00	1.01	1.01	1.56	0.45	-1.19
7	10.58		2.34	-0.05	-1.57	-0.01	-0.01	0.04
	-0.02	0.57E+06	2.34	-0.05	-1.57	-0.01	-0.01	0.04
	-1.99	90.85	0.00	1.01	1.01	1.56	0.45	-1.18
8	10.58		2.35	-0.05	-1.58	-0.01	-0.01	0.00
	0.00	0.57E+06	2.35	-0.05	-1.58	-0.01	-0.01	0.00
	0.04	90.88	0.00	1.01	1.01	1.57	0.45	-1.18
9	10.00		2.33	-0.06	-1.57	-0.01	0.00	-0.03
	-0.01	0.57E+06	2.33	-0.06	-1.57	-0.01	0.00	-0.03
	2.00	90.88	0.00	0.98	0.98	1.56	0.45	-1.17
10	10.58		2.34	-0.05	-1.58	-0.01	0.00	-0.06
	-0.01	0.57E+06	2.34	-0.05	-1.58	-0.01	0.00	-0.06
	4.00	90.89	0.00	1.00	1.00	1.56	0.45	-1.18
11	10.48		2.35	-0.06	-1.58	-0.01	0.00	-0.08
	-0.01	0.57E+06	2.35	-0.06	-1.58	-0.01	0.00	-0.08
	6.00	90.88	0.00	1.01	1.01	1.57	0.45	-1.19
12	10.48		2.35	-0.06	-1.58	-0.01	0.01	-0.13
	-0.01	0.57E+06	2.35	-0.06	-1.58	-0.01	0.01	-0.13
	8.01	90.80	0.00	0.98	0.98	1.57	0.45	-1.19
13	10.48		2.35	-0.06	-1.58	-0.01	0.01	-0.16
	-0.01	0.57E+06	2.35	-0.06	-1.58	-0.01	0.01	-0.16
	10.02	90.88	0.00	1.00	1.00	1.57	0.44	-1.18
14	10.35		2.33	-0.07	-1.57	-0.01	0.00	-0.21
	0.00	0.50E+06	2.33	-0.07	-1.57	-0.01	0.00	-0.21
	15.01	90.98	0.00	1.02	1.02	1.54	0.45	-1.17

PROPULSIVE WING FORCE DATA

SUMMARY, RUN 174

PT	Q ALPHA BETA	REY NO HEIGHT	CL15 CDF16 CRUC	CD15 CAF16 CRUM	CPR15 CPR16 CRUT	CBR15 CBR16 CLTR	CYR15 CYR16 CDTR	CSF15 CSF16 CNTR
1	10.46		2.05	0.31	-1.72	0.00	0.00	-0.26
	0.00	0.57E+06	2.00	-0.00	-1.72	0.00	0.00	-0.26
	10.01	120.00	0.00	1.01	1.01	1.00	0.70	-1.22
2	10.50		2.00	0.31	-1.73	0.00	0.00	-0.21
	0.01	0.57E+06	2.00	-0.00	-1.73	0.00	0.00	-0.21
	0.00	120.00	0.00	0.00	0.00	2.04	0.71	-1.33
3	10.50		2.03	0.32	-1.75	0.01	0.01	-0.16
	0.01	0.57E+06	2.05	-0.00	-1.75	0.00	0.01	-0.16
	0.00	120.00	0.00	1.00	1.00	2.00	0.72	-1.35
4	10.50		2.01	0.32	-1.74	0.00	0.00	-0.12
	0.01	0.57E+06	2.02	-0.00	-1.74	0.00	0.00	-0.12
	0.01	120.00	0.00	0.00	0.00	2.06	0.72	-1.34
5	10.50		2.00	0.32	-1.75	0.00	0.00	-0.08
	0.02	0.57E+06	2.03	-0.00	-1.75	0.00	0.00	-0.08
	0.01	120.00	0.00	1.00	1.00	2.00	0.72	-1.34
6	10.50		2.00	0.32	-1.74	0.00	0.00	-0.05
	0.02	0.57E+06	2.02	-0.00	-1.74	0.00	0.00	-0.05
	2.01	120.00	0.00	1.00	1.00	2.06	0.72	-1.34
7	10.50		2.02	0.32	-1.75	-0.01	-0.01	-0.01
	0.02	0.57E+06	2.04	-0.00	-1.75	-0.01	-0.01	-0.01
	0.00	120.00	0.00	1.00	1.00	2.00	0.72	-1.34
8	10.48		2.04	0.33	-1.76	-0.01	-0.01	0.04
	0.02	0.57E+06	2.06	-0.00	-1.76	-0.01	-0.01	0.04
	-2.01	120.00	0.00	1.00	1.00	2.00	0.73	-1.35
9	10.50		2.07	0.31	-1.73	-0.01	-0.02	0.08
	7.00	0.57E+06	2.00	-0.00	-1.73	-0.01	-0.02	0.08
	-4.00	87.00	0.00	1.00	1.00	2.01	0.71	-1.33
10	10.50		2.00	0.31	-1.74	-0.01	-0.02	0.13
	0.01	0.57E+06	2.00	-0.00	-1.74	-0.01	-0.02	0.13
	-8.00	87.73	0.00	0.00	0.00	2.00	0.71	-1.34
11	10.50		2.00	0.31	-1.73	-0.01	-0.02	0.15
	0.01	0.57E+06	2.00	-0.10	-1.73	-0.01	-0.02	0.15
	-8.02	87.73	0.00	1.00	1.00	2.02	0.71	-1.33
12	10.50		2.05	0.30	-1.71	-0.01	-0.02	0.18
	0.02	0.57E+06	2.00	-0.10	-1.71	-0.01	-0.02	0.18
	-10.00	87.73	0.00	1.00	1.00	1.96	0.70	-1.30
13	10.25		2.02	0.30	-1.71	-0.01	0.00	0.25
	0.02	0.50E+06	2.04	-0.11	-1.71	-0.01	-0.01	0.25
	-15.00	87.73	0.00	1.02	1.02	1.95	0.00	-1.20

PROPULSIVE WING FORCE DATA

SUMMARY, RUN 175

PT	Q ALPHA BETA	REY NO HEIGHT	CL15 CDF16 CRUC	CD15 CAF16 CRUM	CPR15 CPR16 CRUT	CBR15 CBR16 CLTR	CYR15 CYR16 CDTR	CSF15 CSF16 CNTR
1	5.00		3.73	0.01	-2.37	-0.02	-0.02	0.24
	0.01	0.41E+06	3.70	-0.51	-2.37	-0.02	-0.02	0.24
	-15.00	87.02	0.00	1.00	1.00	2.05	0.70	-1.07
2	5.17		3.02	0.03	-2.40	-0.02	-0.03	0.18
	0.00	0.40E+06	3.00	-0.52	-2.40	-0.02	-0.03	0.18
	-10.02	87.02	0.00	2.05	2.05	2.15	0.00	-1.06
3	5.20		3.00	0.03	-2.47	-0.02	-0.03	0.14
	0.00	0.40E+06	3.07	-0.51	-2.47	-0.02	-0.03	0.14
	-8.01	87.02	0.00	2.01	2.01	2.16	0.04	-1.06
4	5.20		3.02	0.04	-2.46	-0.02	-0.03	0.11
	7.00	0.40E+06	3.00	-0.50	-2.46	-0.02	-0.03	0.11
	-5.00	87.02	0.00	2.01	2.01	2.16	0.05	-1.06
5	5.20		3.00	0.04	-2.44	-0.02	-0.02	0.06
	0.01	0.40E+06	3.05	-0.50	-2.44	-0.02	-0.03	0.06
	-3.00	87.70	0.00	2.01	2.01	2.16	0.05	-1.02
6	5.20		3.04	0.05	-2.46	-0.03	-0.01	0.02
	0.01	0.40E+06	3.00	-0.50	-2.46	-0.02	-0.02	0.02
	-2.00	87.70	0.00	2.02	2.02	2.20	0.05	-1.00
7	5.20		3.01	0.03	-2.45	-0.02	-0.01	-0.03
	0.01	0.40E+06	3.07	-0.51	-2.45	-0.01	-0.02	-0.03
	0.01	87.70	0.00	2.01	2.01	2.17	0.04	-1.03
8	5.20		3.03	0.03	-2.48	-0.01	-0.01	-0.06
	0.01	0.40E+06	3.00	-0.51	-2.48	-0.01	-0.01	-0.06
	2.00	87.70	0.00	2.02	2.02	2.16	0.04	-1.00
9	5.20		3.02	0.04	-2.47	-0.01	-0.01	-0.10
	0.01	0.40E+06	3.00	-0.50	-2.47	-0.01	-0.01	-0.10
	4.00	87.70	0.00	2.03	2.03	2.16	0.05	-1.00
10	5.20		3.01	0.03	-2.46	-0.01	0.00	-0.15
	0.00	0.40E+06	3.00	-0.51	-2.46	-0.01	0.00	-0.15
	6.01	87.70	0.00	2.03	2.03	2.17	0.04	-1.00
11	5.20		3.07	0.02	-2.44	-0.01	0.00	-0.18
	0.00	0.40E+06	3.04	-0.52	-2.44	-0.01	0.00	-0.18
	8.01	87.70	0.00	2.03	2.03	2.12	0.03	-1.02
12	5.17		3.05	0.03	-2.51	-0.01	0.01	-0.22
	0.00	0.40E+06	3.01	-0.52	-2.51	-0.01	0.00	-0.22
	10.00	87.70	0.00	2.03	2.03	2.10	0.05	-1.00
13	5.17		3.04	0.00	-2.20	-0.01	0.01	-0.20
	0.01	0.40E+06	3.02	-0.45	-2.20	-0.01	0.01	-0.20
	15.00	87.70	0.00	1.01	1.01	2.03	0.02	-1.03

PROPULSIVE WING FORCE DATA

SUMMARY, RUN 176

PT	Q ALPHA BETA	REY NO HEIGHT	CL15 CSF15 CNUC	CD15 CAF15 CNWA	CPM15 CPM15 CNST	CBM15 CBM15 CLTR	CYM15 CYM15 CDTR	CSF15 CSF15 CNTR
1	5.29		3.10	-0.48	-2.23	-0.02	0.00	-0.20
	-0.01	0.40E+06	3.10	-0.48	-2.23	-0.02	0.00	-0.20
	15.01	87.04	0.00	1.96	1.96	1.61	0.54	-1.43
2	5.29		3.10	-0.42	-2.17	-0.02	0.00	-0.19
	0.01	0.40E+06	3.10	-0.42	-2.17	-0.02	0.00	-0.19
	10.01	87.04	0.00	1.87	1.87	1.62	0.55	-1.41
3	5.29		3.18	-0.45	-2.23	-0.02	0.00	-0.15
	0.01	0.40E+06	3.18	-0.45	-2.23	-0.02	0.00	-0.15
	5.01	87.04	0.00	1.95	1.95	1.84	0.56	-1.44
4	5.40		3.11	-0.44	-2.18	-0.02	0.00	-0.13
	0.01	0.41E+06	3.11	-0.44	-2.18	-0.02	0.00	-0.13
	5.01	87.04	0.00	1.87	1.87	1.81	0.54	-1.41
5	5.17		3.23	-0.45	-2.26	-0.02	0.00	-0.00
	0.01	0.40E+06	3.23	-0.45	-2.26	-0.02	0.00	-0.00
	4.00	87.04	0.00	2.02	2.02	1.87	0.57	-1.47
6	5.29		3.14	-0.45	-2.23	-0.02	-0.01	-0.03
	0.01	0.40E+06	3.14	-0.45	-2.23	-0.02	-0.01	-0.03
	2.01	87.04	0.00	1.96	1.96	1.50	0.56	-1.44
7	5.29		3.18	-0.45	-2.24	-0.02	-0.01	0.02
	0.01	0.40E+06	3.18	-0.45	-2.24	-0.02	-0.01	0.02
	0.00	87.04	0.00	1.96	1.96	1.62	0.56	-1.45
8	5.29		3.18	-0.45	-2.24	-0.01	-0.03	0.01
	0.02	0.40E+06	3.18	-0.45	-2.24	-0.01	-0.03	0.01
	-2.01	87.04	0.00	1.96	1.96	1.62	0.56	-1.45
9	5.17		3.25	-0.46	-2.29	-0.01	-0.02	0.07
	0.02	0.40E+06	3.25	-0.47	-2.29	-0.01	-0.03	0.07
	-4.00	87.04	0.00	1.94	1.94	1.86	0.57	-1.46
10	5.29		3.18	-0.45	-2.24	-0.01	-0.03	0.12
	0.02	0.40E+06	3.18	-0.45	-2.24	-0.01	-0.03	0.12
	-6.02	87.04	0.00	1.95	1.95	1.61	0.56	-1.44
11	5.29		3.23	-0.45	-2.25	-0.01	-0.04	0.18
	-0.01	0.40E+06	3.23	-0.45	-2.25	-0.01	-0.04	0.18
	-8.01	88.93	0.00	1.98	1.98	1.86	0.57	-1.45
12	5.17		3.21	-0.46	-2.25	-0.01	-0.04	0.20
	0.00	0.40E+06	3.21	-0.46	-2.25	-0.01	-0.04	0.20
	-10.00	88.93	0.00	1.97	1.97	1.82	0.57	-1.44
13	5.29		3.10	-0.44	-2.18	-0.02	-0.02	0.26
	0.00	0.40E+06	3.10	-0.44	-2.18	-0.02	-0.02	0.26
	-15.01	88.93	0.00	1.94	1.94	1.57	0.55	-1.40

PROPULSIVE WING FORCE DATA

SUMMARY, RUN 177

PT	Q ALPHA BETA	REY NO HEIGHT	CL15 CSF10 CNUC	CD15 CAF10 CNWA	CPM15 CPM10 CNST	CBM15 CBM10 CLTR	CYM15 CYM10 CDTR	CSF15 CSF10 CNTR
1	5.17		3.10	-0.56	-2.24	-0.02	0.00	-0.08
	-2.00	0.40E+06	3.12	-0.48	-2.24	-0.02	0.00	-0.08
	5.01	88.32	0.00	2.00	2.00	1.56	0.52	-1.44
2	5.17		3.22	-0.45	-2.27	-0.02	-0.01	-0.07
	0.01	0.40E+06	3.22	-0.45	-2.27	-0.02	-0.01	-0.07
	5.01	87.72	0.00	2.00	2.00	1.64	0.56	-1.47
3	5.17		3.35	-0.34	-2.29	-0.02	0.00	-0.11
	2.00	0.40E+06	3.34	-0.46	-2.29	-0.02	0.00	-0.11
	5.01	90.41	0.00	1.98	1.98	1.74	0.63	-1.48
4	5.29		3.48	-0.21	-2.30	-0.02	0.00	-0.11
	2.00	0.40E+06	3.44	-0.45	-2.30	-0.02	0.00	-0.11
	5.01	93.77	0.00	1.95	1.95	1.84	0.69	-1.51
5	5.29		3.68	-0.07	-2.38	-0.01	0.00	-0.11
	5.00	0.40E+06	3.65	-0.45	-2.38	-0.01	0.00	-0.11
	5.01	90.00	0.00	1.98	1.98	2.03	0.77	-1.57
6	5.29		3.61	0.07	-2.41	-0.01	0.00	-0.12
	8.00	0.40E+06	3.78	-0.47	-2.41	-0.01	0.00	-0.12
	5.01	93.70	0.00	1.96	1.96	2.13	0.88	-1.61
7	5.06		4.10	0.20	-2.55	-0.01	0.00	-0.14
	10.00	0.39E+06	4.08	-0.51	-2.55	-0.01	-0.01	-0.14
	5.01	91.51	0.00	2.05	2.05	2.31	0.98	-1.72
8	5.29		4.15	0.37	-2.52	-0.01	0.00	-0.16
	12.00	0.40E+06	4.13	-0.50	-2.52	-0.01	0.00	-0.16
	5.01	88.76	0.00	1.96	1.96	2.41	1.03	-1.73
9	5.29		4.21	0.51	-2.46	-0.01	-0.01	-0.15
	14.01	0.40E+06	4.20	-0.53	-2.46	-0.01	-0.01	-0.15
	5.01	85.29	0.00	1.96	1.96	2.44	1.11	-1.88
10	5.17		4.40	0.88	-2.56	0.00	-0.01	-0.17
	16.03	0.40E+06	4.41	-0.56	-2.56	0.00	-0.01	-0.17
	5.01	84.46	0.00	2.00	2.00	2.57	1.24	-1.95
11	5.17		4.50	0.85	-2.58	0.00	-0.01	-0.19
	18.02	0.40E+06	4.55	-0.58	-2.58	0.00	-0.01	-0.19
	5.01	84.76	0.00	2.01	2.01	2.66	1.36	-1.77
12	5.17		4.57	1.03	-2.56	0.00	-0.03	-0.18
	20.02	0.40E+06	4.85	-0.60	-2.56	0.01	-0.02	-0.18
	5.01	82.64	0.00	2.02	2.02	2.71	1.46	-1.78
13	5.29		4.55	1.20	-2.50	0.01	-0.03	-0.18
	22.00	0.40E+06	4.86	-0.59	-2.50	0.02	-0.02	-0.18
	5.01	80.28	0.00	1.97	1.97	2.71	1.56	-1.70

PROPULSIVE WING FORCE DATA

SUMMARY, RUN 176

PT	Q ALPHA BETA	REY NO HEIGHT	CL15 CSF16 CRUC	CD15 CAF16 CRUN	CPR15 CPR16 CRUT	CBR15 CBR16 CLTR	CYR15 CYR16 CDTR	CSF15 CSF16 CNTR
1	5.17		3.11	-0.57	-2.25	-0.02	-0.02	0.00
	-1.00	0.40E+06	3.13	-0.47	-2.25	-0.02	-0.02	0.00
	-0.01	87.20	0.00	2.00	2.00	1.57	0.51	-1.44
2	5.17		3.23	-0.46	-2.30	-0.02	-0.02	0.01
	0.00	0.40E+06	3.23	-0.46	-2.30	-0.02	-0.02	0.01
	-0.01	84.20	0.00	2.01	2.01	1.84	0.57	-1.46
3	5.20		3.33	-0.34	-2.38	-0.02	-0.02	-0.01
	2.02	0.40E+06	3.32	-0.46	-2.38	-0.02	-0.02	-0.01
	-0.01	90.71	0.00	1.98	1.98	1.74	0.61	-1.40
4	5.17		3.50	-0.22	-2.38	-0.02	-0.02	0.00
	4.01	0.40E+06	3.54	-0.47	-2.38	-0.02	-0.02	0.00
	-0.01	91.72	0.00	2.01	2.01	1.90	0.70	-1.56
5	5.17		3.72	-0.00	-2.42	-0.02	-0.02	-0.01
	6.00	0.40E+06	3.80	-0.46	-2.42	-0.02	-0.02	-0.01
	-0.01	88.05	0.00	2.02	2.02	2.03	0.78	-1.61
6	5.20		3.84	0.06	-2.44	-0.02	-0.02	-0.02
	8.02	0.40E+06	3.81	-0.47	-2.44	-0.01	-0.02	-0.02
	-0.01	87.06	0.00	1.07	1.07	2.15	0.86	-1.64
7	5.17		4.13	0.23	-2.54	-0.03	-0.04	-0.04
	10.02	0.40E+06	4.10	-0.48	-2.54	-0.03	-0.04	-0.04
	-0.01	88.95	0.00	2.00	2.02	2.37	0.98	-1.73
8	5.17		4.24	0.38	-2.55	-0.03	-0.04	-0.04
	12.03	0.40E+06	4.23	-0.51	-2.55	-0.03	-0.04	-0.04
	-0.01	85.01	0.00	2.01	2.01	2.48	1.07	-1.73
9	5.17		4.34	0.54	-2.55	-0.02	-0.03	-0.05
	14.01	0.40E+06	4.34	-0.53	-2.55	-0.02	-0.04	-0.05
	-0.01	85.00	0.00	2.02	2.02	2.53	1.16	-1.73
10	5.20		4.22	0.67	-2.52	-0.03	-0.03	-0.05
	16.01	0.40E+06	4.33	-0.55	-2.52	-0.02	-0.04	-0.05
	-0.01	85.57	0.00	1.07	1.07	2.53	1.22	-1.72
11	5.17		4.53	0.87	-2.50	-0.02	-0.04	-0.03
	18.03	0.40E+06	4.50	-0.50	-2.50	-0.01	-0.05	-0.03
	-0.02	87.03	0.00	2.02	2.02	2.50	1.30	-1.77
12	5.17		4.56	1.04	-2.40	-0.03	-0.04	-0.03
	20.01	0.40E+06	4.66	-0.59	-2.40	-0.01	-0.04	-0.03
	-0.02	91.03	0.00	2.02	2.02	2.71	1.47	-1.78
13	5.23		4.64	1.22	-2.50	-0.02	-0.04	-0.04
	21.00	0.40E+06	4.76	-0.00	-2.50	0.00	-0.04	-0.04
	-0.02	90.17	0.00	1.98	1.98	2.00	1.50	-1.77

PROPULSIVE WING FORCE DATA

SUMMARY, RUN 176

PT	Q ALPHA BETA	REY NO HEIGHT	CL15 CSF16 CRUC	CD15 CAF16 CRUN	CPR15 CPR16 CRUT	CBR15 CBR16 CLTR	CYR15 CYR16 CDTR	CSF15 CSF16 CNTR
1	2.05		4.50	-1.46	-2.40	-0.05	-0.05	-0.00
	-1.00	0.20E+06	4.64	-1.22	-2.40	-0.05	-0.05	-0.00
	-0.01	87.47	0.00	3.94	3.94	1.56	0.84	-1.91
2	2.05		4.02	-1.31	-2.52	-0.05	-0.05	-0.01
	0.01	0.20E+06	4.02	-1.31	-2.52	-0.05	-0.05	-0.01
	-0.01	84.54	0.00	3.94	3.94	1.81	0.71	-1.94
3	2.05		5.00	-1.12	-3.00	-0.05	-0.00	0.00
	2.01	0.20E+06	5.04	-1.30	-3.00	-0.05	-0.00	0.00
	-0.01	88.73	0.00	3.94	3.94	1.02	0.76	-2.01
4	2.05		5.23	-0.90	-3.03	-0.05	-0.07	-0.03
	3.00	0.20E+06	5.10	-1.22	-3.03	-0.05	-0.00	-0.03
	-0.01	85.00	0.00	3.03	3.03	2.01	0.83	-2.05
5	2.05		5.43	-0.70	-3.05	-0.05	-0.00	-0.03
	5.00	0.20E+06	5.32	-1.32	-3.05	-0.05	-0.00	-0.03
	-0.01	83.42	0.00	3.94	3.94	2.14	0.92	-2.07
6	2.53		5.66	-0.57	-3.01	-0.07	-0.07	-0.00
	6.01	0.20E+06	5.74	-1.20	-3.01	-0.05	-0.00	-0.00
	-0.01	90.71	0.00	4.13	4.13	2.36	1.07	-2.26
7	2.76		5.70	-0.27	-3.00	-0.05	-0.05	-0.07
	10.01	0.20E+06	5.62	-1.26	-3.00	-0.05	-0.07	-0.07
	-0.01	84.32	0.00	3.76	3.76	2.47	1.13	-2.15
8	2.05		5.00	-0.00	-3.07	-0.07	-0.05	-0.10
	12.00	0.20E+06	5.03	-1.24	-3.07	-0.05	-0.07	-0.10
	-0.01	83.07	0.00	3.95	3.95	2.50	1.26	-2.27
9	2.05		5.20	0.15	-3.00	-0.05	-0.05	-0.07
	14.01	0.20E+06	5.13	-1.37	-3.00	-0.04	-0.07	-0.07
	-0.01	82.00	0.00	3.97	3.97	2.75	1.37	-2.29
10	2.53		5.40	0.32	-4.03	-0.07	-0.05	-0.14
	15.99	0.20E+06	5.33	-1.48	-4.03	-0.05	-0.07	-0.14
	-0.01	85.10	0.00	4.13	4.13	2.76	1.46	-2.37
11	2.53		5.60	0.50	-3.90	-0.05	-0.05	-0.12
	18.00	0.20E+06	5.45	-1.51	-3.90	-0.04	-0.00	-0.12
	-0.01	88.31	0.00	4.14	4.14	2.82	1.57	-2.31
12	2.52		5.82	0.66	-4.03	-0.07	-0.05	-0.13
	20.01	0.20E+06	5.70	-1.52	-4.03	-0.04	-0.00	-0.13
	-0.02	92.04	0.00	4.15	4.15	3.00	1.74	-2.36
13	2.76		5.30	1.06	-3.75	-0.02	-0.03	-0.10
	21.00	0.20E+06	5.23	-1.41	-3.75	-0.01	-0.04	-0.10
	-0.02	90.32	0.00	3.00	3.00	2.86	1.74	-2.22

PROPULSIVE WING FORCE DATA

SUMMARY. RUN 100

PT	Q ALPHA DELTA	REY NO HEIGHT	CL15 CAF16 CNUC	CD15 CAF16 CNUN	CPN15 CPN16 CNUT	CBN15 CBN16 CLTR	CYN15 CYN16 CDTR	CSF15 CSF16 CNTR
1	1.27 -2.01 -0.01	0.20E+06 88.24	7.03 8.03 0.00	-3.00 -3.22 8.27	-8.20 -8.20 8.27	-0.00 -0.00 1.50	-0.07 -0.07 0.04	-0.01 -0.01 -2.80
2	1.27 0.00 -0.01	0.20E+06 83.46	8.20 8.20 0.00	-3.34 -3.34 8.26	-8.10 -8.10 8.26	-0.00 -0.00 1.00	-0.08 -0.08 0.00	-0.00 -0.00 -2.00
3	1.27 2.00 -0.01	0.20E+06 80.00	8.03 8.44 0.00	-3.01 -3.31 8.27	-8.27 -8.27 8.27	-0.00 -0.00 1.02	-0.07 -0.07 0.00	0.00 0.00 -2.06
4	1.27 4.00 -0.01	0.20E+06 87.20	8.07 8.00 0.00	-2.71 -3.32 8.25	-8.20 -8.20 8.25	-0.00 -0.00 2.10	-0.04 -0.05 1.04	-0.12 -0.12 -2.00
5	1.27 6.01 -0.01	0.20E+06 85.75	9.17 8.07 0.00	-2.26 -3.20 8.30	-8.45 -8.45 8.30	-0.00 -0.00 2.27	-0.05 -0.05 1.17	-0.00 -0.00 -2.14
6	1.27 8.00 -0.01	0.20E+06 84.40	9.44 9.07 0.00	-1.90 -3.20 8.28	-8.54 -8.54 8.28	-0.00 -0.00 2.41	-0.06 -0.07 1.20	-0.00 -0.00 -2.23
7	1.27 10.00 -0.01	0.20E+06 86.00	9.00 9.22 0.00	-1.00 -3.31 8.26	-8.56 -8.56 8.26	-0.00 -0.07 2.51	-0.04 -0.06 1.30	-0.14 -0.14 -2.23
8	1.27 12.00 -0.01	0.20E+06 88.51	9.00 9.53 0.00	-1.24 -3.20 8.30	-8.00 -8.00 8.30	-0.00 -0.07 2.72	-0.04 -0.06 1.50	-0.14 -0.14 -2.33
9	1.27 14.02 -0.01	0.20E+06 88.51	10.23 9.02 0.00	-0.05 -3.32 8.20	-8.72 -8.72 8.20	-0.00 -0.07 2.90	-0.04 -0.06 1.60	-0.10 -0.10 -2.30
10	1.30 16.00 -0.01	0.21E+06 88.00	9.72 9.23 0.00	-0.30 -3.05 7.50	-8.01 -8.01 7.50	-0.07 -0.00 2.00	-0.03 -0.05 1.70	-0.00 -0.00 -2.00
11	1.27 18.00 -0.01	0.20E+06 87.40	10.03 10.60 0.00	-0.11 -3.30 8.26	-8.57 -8.57 8.26	-0.00 -0.00 3.10	-0.03 -0.06 1.01	-0.07 -0.07 -3.25
12	1.27 20.01 -0.02	0.20E+06 92.04	10.50 9.03 0.00	0.10 -3.42 8.31	-8.40 -8.40 8.31	-0.00 -0.00 2.90	-0.03 -0.06 1.03	-0.15 -0.15 -3.16
13	1.15 21.07 -0.02	0.10E+06 90.28	11.70 11.14 0.00	0.04 -3.81 9.12	-7.25 -7.25 9.12	-0.00 -0.00 3.33	-0.02 -0.05 2.28	-0.24 -0.24 -3.56

PROPULSIVE WING FORCE DATA

SUMMARY. RUN 101

PT	Q ALPHA DELTA	REY NO HEIGHT	CL15 CAF16 CNUC	CD15 CAF16 CNUN	CPN15 CPN16 CNUT	CBN15 CBN16 CLTR	CYN15 CYN16 CDTR	CSF15 CSF16 CNTR
2	0.00 0.07 -0.01	0.20E+06 43.50	0.00 0.00 0.00	0.03 0.03 0.31	-1.05 -1.05 0.31	1.30 1.30 -7.07	0.00 0.00 7.50	-0.00 -0.00 4.01
3	0.00 0.11 -0.01	0.20E+07 43.16	16.03 95.96 0.00	-30.04 -30.04 84.05	-523.00 -523.00 84.05	-70.70 -70.71 22.37	-40.34 -40.40 -21.00	-1.00 -1.00 -370.30

PROPULSIVE WING FORCE DATA

SUMMARY, RUN 102

PT	Q ALPHA DELTA	REY NO HEIGHT	CL15 CAF15 CNWC	CD15 CAF15 CNWA	CPR15 CPR15 CNWT	CBR15 CBR15 CLTS	CYR15 CYR15 CDTS	CSF15 CSF15 CNTS
2	0.00		-2.71	-6.16	15.00	-3.14	-6.71	-0.43
	0.00	0.30E+06	-2.71	-6.16	15.00	-3.14	-6.71	-0.43
	-0.01	87.43	0.00	0.46	0.46	-10.08	7.40	21.95
3	0.00		20.02	-22.49	-278.10	3.20	-9.11	0.04
	0.01	0.30E+06	20.02	-22.46	-278.10	3.20	-9.11	0.04
	-0.01	87.43	0.00	41.31	41.31	15.71	-10.07	-200.30
4	0.00		54.06	-27.00	-053.00	6.52	-11.04	1.30
	0.02	0.30E+06	54.04	-27.51	-053.00	6.53	-11.04	1.35
	-0.01	87.43	0.00	82.46	82.46	30.30	-10.46	-630.30

PROPULSIVE WING FORCE DATA

SUMMARY, RUN 103

PT	Q ALPHA DELTA	REY NO HEIGHT	CL15 CAF15 CNWC	CD15 CAF15 CNWA	CPR15 CPR15 CNWT	CBR15 CBR15 CLTS	CYR15 CYR15 CDTS	CSF15 CSF15 CNTS
2	0.00		20.05	-57.30	-335.50	-95.27	-10.23	0.01
	-0.02	0.30E+06	20.47	-57.30	-335.50	-94.30	-10.23	0.01
	-0.01	43.45	7.00	10.00	30.47	10.11	-40.32	-200.50
3	0.00		57.02	-70.07	-731.00	-90.31	-30.00	1.05
	-0.01	0.30E+06	57.03	-70.07	-731.00	-90.31	-30.00	1.05
	-0.01	43.45	34.04	54.00	70.04	34.00	-00.40	-712.70
4	0.00		02.73	-00.03	-1000.00	-33.40	-31.04	0.23
	0.00	0.30E+06	02.72	-00.03	-1000.00	-33.20	-31.04	0.23
	-0.01	43.45	37.00	04.70	172.00	30.14	-03.01	-072.00
5	0.00		100.00	-120.00	-1200.00	-52.02	-02.00	1.03
	0.02	0.30E+06	107.00	-120.00	-1200.00	-52.00	-02.02	1.03
	-0.01	43.45	51.10	112.70	104.00	34.20	-71.20	-1241.00
6	0.00		130.00	-144.00	-1040.00	-70.20	-00.01	2.04
	0.02	0.30E+06	130.00	-144.10	-1040.00	-70.20	-00.70	2.04
	-0.01	43.45	00.31	140.10	210.40	41.01	-00.00	-1000.00

PROPULSIVE WING FORCE DATA

SUMMARY, RUN 104

PT	Q ALPHA BETA	REY NO HEIGHT	CL15 CAF10 CNPC	CD15 CAF10 CNWH	CPM15 CPM10 CNHT	CBM15 CBM10 CLTR	CYM15 CYM10 CDTR	CSF15 CSF10 CNTR
2	30.22 -2.06 -0.01	0.97E+06 88.86	0.41 0.40 0.00	0.14 0.15 0.00	-0.12 -0.12 0.00	0.00 0.00 0.30	0.00 0.00 0.10	0.01 0.01 -0.11
3	30.00 -0.01 -0.01	0.90E+06 88.58	0.52 0.52 0.00	0.15 0.15 0.00	-0.11 -0.11 0.00	0.00 0.00 0.50	-0.01 -0.01 0.17	0.00 0.00 -0.08
4	29.99 -0.01 -0.01	0.90E+06 88.58	0.51 0.51 0.00	0.15 0.15 0.00	-0.11 -0.11 0.00	0.00 0.00 0.48	-0.01 -0.01 0.17	0.00 0.00 -0.08
5	30.00 2.01 -0.01	0.90E+06 88.74	0.52 0.53 0.00	0.17 0.15 0.00	-0.10 -0.10 0.00	0.00 0.00 0.50	0.00 0.00 0.10	0.00 0.00 -0.08
6	30.00 4.06 -0.01	0.90E+06 88.88	0.72 0.74 0.00	0.20 0.15 0.00	-0.08 -0.08 0.00	0.00 0.00 0.71	0.00 0.00 0.22	0.00 0.00 -0.07
7	30.12 6.03 -0.01	0.90E+06 88.98	0.94 0.98 0.00	0.23 0.14 0.00	-0.07 -0.07 0.00	0.00 0.00 0.81	0.00 0.00 0.25	0.00 0.00 -0.05
8	30.00 8.01 -0.01	0.90E+06 89.01	0.97 1.00 0.00	0.27 0.14 0.00	-0.04 -0.04 0.00	0.00 0.00 0.94	0.00 0.00 0.29	0.00 0.00 -0.03
9	30.00 10.00 -0.01	0.90E+06 88.10	1.00 1.12 0.00	0.32 0.13 0.00	-0.01 -0.01 0.00	0.00 0.00 1.06	0.00 0.00 0.34	-0.01 -0.01 0.00
10	30.23 12.10 -0.01	0.97E+06 88.30	1.20 1.25 0.00	0.38 0.12 0.00	-0.01 -0.01 0.00	0.00 0.00 1.18	0.00 0.00 0.39	0.00 0.00 0.01
11	29.88 14.03 -0.01	0.90E+06 83.88	1.32 1.38 0.00	0.45 0.11 0.00	-0.01 -0.01 0.00	0.00 0.00 1.30	0.00 0.00 0.46	0.00 0.00 0.01
12	29.89 16.04 -0.01	0.90E+06 88.11	1.45 1.54 0.00	0.53 0.11 0.00	-0.03 -0.03 0.00	0.00 0.00 1.42	0.00 0.00 0.54	0.00 0.00 -0.01
13	29.77 18.02 -0.01	0.90E+06 88.81	1.53 1.65 0.00	0.62 0.12 0.00	-0.07 -0.07 0.00	0.00 0.00 1.51	0.00 0.00 0.63	0.00 0.00 -0.06
14	29.54 20.04 -0.01	0.90E+06 87.88	1.61 1.78 0.00	0.71 0.12 0.00	-0.06 -0.06 0.00	0.00 0.00 1.58	0.00 0.00 0.73	-0.01 -0.01 -0.06
15	30.00 22.00 -0.01	0.90E+06 84.71	1.68 1.88 0.00	0.81 0.12 0.00	-0.06 -0.06 0.00	0.00 0.00 1.66	0.00 0.00 0.83	0.00 0.00 -0.04

PROPULSIVE WING FORCE DATA

SUMMARY, RUN 100

PT	Q ALPHA BETA	REY NO HEIGHT	CL15 CAF10 CNPC	CD15 CAF10 CNWH	CPM15 CPM10 CNHT	CBM15 CBM10 CLTR	CYM15 CYM10 CDTR	CSF15 CSF10 CNTR
1	30.12 -2.01 5.01	0.90E+06 87.02	0.42 0.41 0.00	0.13 0.14 0.00	-0.12 -0.12 0.00	-0.01 -0.01 0.40	0.00 0.00 0.15	-0.06 -0.06 -0.11
2	30.12 0.00 5.01	0.90E+06 88.77	0.52 0.52 0.00	0.15 0.15 0.00	-0.11 -0.11 0.00	-0.01 -0.01 0.50	0.00 0.00 0.17	-0.06 -0.06 -0.10
3	29.88 2.02 5.01	0.90E+06 88.90	0.62 0.63 0.00	0.17 0.15 0.00	-0.08 -0.08 0.00	-0.01 -0.01 0.60	0.00 0.00 0.19	-0.06 -0.06 -0.08
4	30.00 4.07 5.01	0.90E+06 88.29	0.73 0.74 0.00	0.20 0.15 0.00	-0.07 -0.07 0.00	-0.01 -0.01 0.70	0.00 0.00 0.22	-0.06 -0.06 -0.08
5	29.99 6.04 5.01	0.90E+06 87.03	0.85 0.87 0.00	0.23 0.14 0.00	-0.07 -0.07 0.00	-0.01 -0.01 0.83	0.00 -0.01 0.25	-0.06 -0.06 -0.06
6	29.88 8.07 5.01	0.90E+06 85.87	0.97 1.00 0.00	0.27 0.13 0.00	-0.04 -0.04 0.00	-0.01 -0.01 0.96	-0.01 -0.01 0.28	-0.06 -0.06 -0.06
7	29.88 10.08 5.01	0.90E+06 85.88	1.08 1.13 0.00	0.32 0.12 0.00	-0.02 -0.02 0.00	-0.02 -0.01 1.06	-0.01 -0.01 0.33	-0.06 -0.06 -0.01
8	29.88 12.02 5.01	0.90E+06 86.95	1.18 1.24 0.00	0.37 0.12 0.00	0.00 0.00 0.00	-0.02 -0.02 1.16	0.00 -0.01 0.38	-0.06 -0.06 0.00
9	29.77 13.98 5.01	0.90E+06 85.16	1.32 1.38 0.00	0.44 0.11 0.00	-0.01 -0.01 0.00	-0.02 -0.02 1.28	0.00 -0.01 0.46	-0.06 -0.06 0.01
10	29.88 16.05 5.01	0.90E+06 86.36	1.41 1.50 0.00	0.53 0.11 0.00	0.00 0.00 0.00	-0.02 -0.02 1.38	0.00 -0.01 0.53	-0.04 -0.04 0.00
11	29.77 17.04 5.01	0.90E+06 85.96	1.53 1.64 0.00	0.62 0.12 0.00	-0.06 -0.06 0.00	-0.01 -0.01 1.50	-0.01 -0.01 0.62	-0.02 -0.02 -0.04
12	30.00 20.00 5.01	0.90E+06 87.53	1.60 1.75 0.00	0.71 0.12 0.00	-0.06 -0.06 0.00	-0.01 -0.01 1.57	-0.01 -0.01 0.72	-0.04 -0.04 -0.06
13	29.77 21.98 5.01	0.90E+06 84.83	1.66 1.84 0.00	0.80 0.12 0.00	-0.05 -0.05 0.00	-0.01 0.00 1.63	-0.02 -0.02 0.81	-0.02 -0.02 -0.03

PROPULSIVE WING FORCE DATA

SUMMARY, RUN 106

PT	Q ALPHA BETA	REY NO HEIGHT	CL15 CAF10 CNUC	CD15 CAF10 CNUU	CPM15 CPM10 CNUT	CRM15 CRM10 CLTU	CYM15 CYM10 CDTU	CSF15 CSF10 CNTU
1	30.00 -0.01 10.01	0.90E+06 87.35	0.53 0.53 0.00	0.15 0.15 0.00	-0.12 -0.12 0.00	-0.03 -0.03 0.51	-0.01 -0.01 0.17	-0.17 -0.17 -0.11
2	30.23 0.00 10.02	0.97E+06 87.35	0.53 0.53 0.00	0.15 0.15 0.00	-0.12 -0.12 0.00	-0.02 -0.02 0.51	0.00 0.00 0.17	-0.13 -0.13 -0.11
3	30.00 0.01 7.07	0.90E+06 87.35	0.53 0.53 0.00	0.15 0.15 0.00	-0.12 -0.12 0.00	-0.02 -0.02 0.51	0.00 0.00 0.17	-0.10 -0.10 -0.10
4	30.12 0.01 3.00	0.97E+06 87.35	0.52 0.52 0.00	0.15 0.15 0.00	-0.11 -0.11 0.00	-0.01 -0.01 0.50	0.00 0.00 0.17	-0.07 -0.07 -0.10
5	30.23 0.02 3.00	0.97E+06 87.35	0.52 0.52 0.00	0.15 0.15 0.00	-0.11 -0.11 0.00	-0.01 -0.01 0.49	0.00 0.00 0.17	-0.04 -0.04 -0.10
6	30.00 0.02 1.00	0.90E+06 87.35	0.52 0.52 0.00	0.15 0.15 0.00	-0.12 -0.12 0.00	0.00 0.00 0.50	0.00 0.00 0.17	-0.02 -0.02 -0.10
7	30.12 0.02 0.00	0.97E+06 87.35	0.51 0.51 0.00	0.15 0.15 0.00	-0.11 -0.11 0.00	0.00 0.00 0.49	0.00 0.00 0.17	0.01 0.01 -0.00
8	30.12 0.02 -2.00	0.97E+06 87.35	0.52 0.52 0.00	0.15 0.15 0.00	-0.11 -0.11 0.00	0.01 0.01 0.50	0.00 0.00 0.17	0.03 0.03 -0.10
9	30.12 0.03 -4.00	0.97E+06 87.35	0.52 0.52 0.00	0.15 0.15 0.00	-0.12 -0.12 0.00	0.01 0.01 0.50	0.00 0.00 0.17	0.00 0.00 -0.10
10	30.12 0.03 -6.01	0.97E+06 87.35	0.52 0.52 0.00	0.15 0.15 0.00	-0.11 -0.11 0.00	0.00 0.00 0.50	0.00 0.00 0.17	0.00 0.00 -0.10
11	30.00 0.04 -8.00	0.90E+06 87.35	0.53 0.53 0.00	0.15 0.15 0.00	-0.12 -0.12 0.00	0.02 0.02 0.51	0.00 0.00 0.17	0.11 0.11 -0.11
12	30.00 0.04 -10.02	0.90E+06 87.35	0.54 0.54 0.00	0.15 0.15 0.00	-0.12 -0.12 0.00	0.03 0.03 0.52	0.00 0.00 0.17	0.13 0.13 -0.11
13	30.00 0.05 -15.09	0.90E+06 87.35	0.54 0.54 0.00	0.14 0.14 0.00	-0.12 -0.12 0.00	0.03 0.03 0.51	0.01 0.01 0.16	0.16 0.16 -0.11

PROPULSIVE WING FORCE DATA

SUMMARY, RUN 107

PT	Q ALPHA BETA	REY NO HEIGHT	CL15 CAF10 CNUC	CD15 CAF10 CNUU	CPM15 CPM10 CNUT	CRM15 CRM10 CLTU	CYM15 CYM10 CDTU	CSF15 CSF10 CNTU
1	30.00 0.00 15.01	0.90E+06 88.41	0.00 0.00 0.00	0.27 0.13 0.00	-0.00 -0.00 0.00	-0.00 -0.00 0.03	-0.00 -0.03 0.30	-0.14 -0.14 -0.04
2	30.12 0.03 10.02	0.97E+06 85.41	0.00 0.00 0.00	0.27 0.13 0.00	-0.04 -0.04 0.00	-0.03 -0.03 0.04	-0.01 -0.01 0.30	-0.11 -0.11 -0.03
3	30.12 0.04 0.01	0.97E+06 88.41	0.00 0.00 0.00	0.27 0.13 0.00	-0.04 -0.04 0.00	-0.03 -0.00 0.04	-0.01 -0.01 0.30	-0.00 -0.00 -0.03
4	30.00 0.04 3.00	0.90E+06 88.41	0.07 1.00 0.00	0.27 0.13 0.00	-0.00 -0.00 0.00	-0.07 -0.02 0.05	-0.01 -0.01 0.30	-0.07 -0.07 -0.00
5	30.00 0.05 3.07	0.90E+06 88.41	0.00 0.00 0.00	0.27 0.13 0.00	-0.04 -0.04 0.00	-0.01 -0.01 0.04	0.00 -0.01 0.30	-0.04 -0.04 -0.00
6	29.00 0.05 1.00	0.90E+06 88.41	0.00 0.00 0.00	0.27 0.13 0.00	-0.04 -0.04 0.00	0.00 0.00 0.03	0.00 0.00 0.30	-0.00 -0.00 -0.00
7	29.00 0.06 0.00	0.90E+06 88.41	0.00 0.00 0.00	0.27 0.13 0.00	-0.04 -0.04 0.00	0.00 0.03 0.04	0.00 0.00 0.30	0.00 0.00 -0.03
8	30.12 0.07 -2.00	0.97E+06 88.41	0.00 0.00 0.00	0.27 0.13 0.00	-0.04 -0.04 0.00	0.01 0.01 0.03	0.00 0.00 0.30	0.00 0.00 -0.00
9	30.12 0.08 -4.01	0.97E+06 88.41	0.07 0.00 0.00	0.27 0.13 0.00	-0.00 -0.00 0.00	0.00 0.00 0.04	0.00 0.00 0.30	0.04 0.04 -0.03
10	30.23 0.08 -5.00	0.97E+06 88.41	0.07 1.00 0.00	0.27 0.13 0.00	-0.00 -0.00 0.00	0.00 0.02 0.05	0.00 0.00 0.30	0.07 0.07 -0.03
11	30.23 0.00 -8.01	0.97E+06 88.41	0.00 1.01 0.00	0.27 0.13 0.00	-0.00 -0.00 0.00	0.03 0.03 0.05	0.00 0.00 0.30	0.00 0.00 -0.03
12	30.12 0.00 -10.01	0.97E+06 88.41	0.00 1.01 0.00	0.27 0.13 0.00	-0.00 -0.00 0.00	0.04 0.04 0.05	0.00 0.01 0.30	0.11 0.11 -0.04
13	30.00 0.00 -10.01	0.90E+06 88.41	0.00 1.01 0.00	0.27 0.13 0.00	-0.00 -0.00 0.00	0.04 0.04 0.00	0.00 0.01 0.30	0.11 0.11 -0.04
14	30.00 0.00 -15.00	0.90E+06 88.41	0.00 0.00 0.00	0.28 0.13 0.00	-0.00 -0.00 0.00	0.00 0.00 0.04	0.00 0.02 0.30	0.14 0.14 -0.04

PROPULSIVE WING FORCE DATA

SUMMARY, RUN 100

PT	Q ALPHA BETA	REY NO HEIGHT	CL15 CDF16 CRUC	CD15 CAF16 CRUH	CPR15 CPR16 CRUT	CBR15 CBR16 CLTR	CYR15 CYR16 CDTR	CSF15 CSF16 CRTR
2	0.00		-1.02	-0.36	5.32	-1.22	4.02	-0.07
	0.00	0.30E+06	-1.02	-0.36	5.32	-1.22	4.02	-0.07
	0.00	48.50	0.17	0.36	0.53	-16.06	7.17	11.10
3	0.00		50.42	-26.03	-520.30	-16.06	-4.53	. 71
	0.03	0.30E+06	50.41	-26.06	-520.30	-16.06	-4.54	-. 71
	0.00	48.50	22.74	51.00	73.03	30.44	-13.78	-610.40
4	0.00		100.00	-75.77	-1373.00	-50.17	-26.30	-1.05
	0.03	0.30E+06	100.50	-75.03	-1373.00	-50.15	-26.33	-1.05
	0.00	81.74	50.47	112.90	163.30	32.75	-36.16	-1235.00
5	0.00		137.40	-98.30	-1800.00	-66.70	-53.56	-0.74
	0.04	0.30E+06	137.40	-98.40	-1800.00	-66.74	-53.03	-0.74
	0.00	81.74	83.35	142.90	300.30	30.22	-34.27	-1630.00

PROPULSIVE WING FORCE DATA

SUMMARY, RUN 100

PT	Q ALPHA BETA	REY NO HEIGHT	CL15 CDF16 CRUC	CD15 CAF16 CRUH	CPR15 CPR16 CRUT	CBR15 CBR16 CLTR	CYR15 CYR16 CDTR	CSF15 CSF16 CRTR
4	0.00		30.21	-20.13	-352.70	22.57	30.53	0.22
	0.06	0.30E+06	30.10	-20.10	-352.70	22.53	30.56	0.23
	0.00	43.34	9.02	12.40	22.40	10.52	-10.08	-345.50
5	0.00		47.87	-34.03	-574.00	26.00	27.01	0.00
	0.06	0.30E+06	47.84	-34.06	-574.00	26.05	27.04	0.00
	0.00	43.34	22.36	40.07	60.43	10.10	-12.70	-656.40
6	0.00		70.03	-51.01	-803.00	-40.07	52.20	0.51
	0.07	0.30E+06	80.97	-51.00	-803.00	40.01	52.20	0.51
	0.00	43.34	26.63	70.15	111.00	20.70	-17.12	-776.00
7	0.00		102.00	-70.01	-1205.00	42.31	14.20	0.50
	0.00	0.30E+06	102.00	-70.06	-1205.00	42.20	14.25	0.50
	0.00	43.34	46.43	104.10	152.50	22.20	-23.10	-1188.00
8	0.00		131.20	-90.00	-1523.00	27.22	15.00	0.22
	0.00	0.30E+06	131.00	-91.11	-1523.00	27.31	17.00	0.22
	0.00	43.34	81.90	134.00	100.00	26.63	-20.17	-1474.00
9	0.00		141.00	-94.20	-1677.00	25.02	2.53	1.20
	0.10	0.30E+06	141.70	-94.53	-1677.00	25.02	2.57	1.20
	0.00	43.34	84.14	130.10	203.30	42.50	-20.50	-1626.0[illegible]

PROPULSIVE WING FORCE DATA

SUMMARY, RUN 100

PT	Q ALPHA BETA	REY NO HEIGHT	CL15 CSF16 CNWC	CD15 CAF16 CNWW	CPM15 CPM16 CMWT	CBM15 CBM16 CLTR	CYM15 CYM16 CDTR	CSF15 CSF16 CNTR
3	0.00		-3.63	-0.07	-12.38	-2.49	-0.00	0.48
	-0.02	0.30E+06	-3.63	-0.07	-12.38	-2.49	-0.00	0.48
	0.00	80.03	0.00	0.10	0.27	-11.76	7.40	-0.53
4	0.00		47.96	-35.86	-861.50	16.00	7.40	0.03
	0.00	0.30E+06	47.96	-35.86	-861.50	16.00	1.40	0.03
	0.00	80.03	23.43	46.37	71.00	17.01	-13.50	-504.00
5	0.00		106.00	-76.20	-1278.00	20.00	21.03	-0.54
	0.03	0.30E+06	106.00	-76.21	-1278.00	20.00	21.05	-0.54
	0.00	80.03	52.04	112.20	104.30	31.03	-24.88	-1238.00
6	0.00		136.00	-94.20	-1843.00	0.20	-4.33	-0.43
	0.04	0.30E+06	136.00	-94.37	-1843.00	0.20	-4.33	-0.43
	0.00	80.03	63.06	130.20	202.00	30.46	-30.30	-1503.00

PROPULSIVE WING FORCE DATA

SUMMARY, RUN 101

PT	Q ALPHA BETA	REY NO HEIGHT	CL15 CSF16 CNWC	CD15 CAF16 CNWW	CPM15 CPM16 CMWT	CBM15 CBM16 CLTR	CYM15 CYM16 CDTR	CSF15 CSF16 CNTR
2	0.00		-0.26	0.10	3.00	-2.94	-3.46	0.24
	-0.03	0.30E+06	-0.26	0.10	3.00	-2.94	-3.46	0.24
	0.00	80.03	0.10	0.22	0.32	-0.41	7.76	0.71
3	0.00		77.27	-52.06	-800.30	21.00	7.00	0.30
	0.01	0.30E+06	77.26	-53.07	-800.30	21.00	7.07	0.30
	0.04	80.03	30.03	80.02	110.00	26.00	-17.34	-871.00
4	0.00		110.50	-72.46	-1240.00	23.37	0.06	0.07
	0.03	0.30E+06	110.50	-72.52	-1240.00	23.37	0.06	0.07
	0.00	80.03	51.00	111.70	163.30	30.54	-22.14	-1201.00
5	0.00		136.00	-91.02	-1500.00	2.26	-17.06	1.01
	0.04	0.30E+06	136.70	-92.02	-1500.00	2.26	-17.06	1.01
	0.00	80.03	63.07	130.76	202.00	30.00	-26.00	-1540.00

PROPULSIVE WING FORCE DATA

SUMMARY. RUN 192

PT	Q ALPHA BETA	REY NO HEIGHT	CL15 CSF15 CNWC	CD15 CAF15 CNWW	CPM15 CPM15 CNWT	CNM15 CNM15 CLTR	CYM15 CYM15 CNTR	CSF15 CSF15 CNTR
2	21.15		1.46	0.04	-0.30	0.00	0.00	0.01
	-1.00	0.80E+06	1.46	0.00	-0.30	0.00	0.00	0.01
	0.00	84.59	0.21	0.47	0.68	0.28	0.38	-0.26
3	21.15		1.55	0.00	-0.27	0.01	0.00	0.00
	0.00	0.80E+06	1.55	0.00	-0.27	0.01	0.00	0.00
	0.00	91.36	0.21	0.46	0.67	0.36	0.38	-0.24
4	21.04		1.63	0.14	-0.22	0.01	-0.01	0.02
	2.00	0.79E+06	1.63	0.08	-0.22	0.01	-0.01	0.02
	0.00	91.91	0.21	0.46	0.67	0.42	0.40	-0.18
5	20.92		1.83	0.23	-0.26	0.02	0.00	-0.01
	4.01	0.79E+06	1.84	0.10	-0.26	0.02	0.00	-0.01
	0.00	90.55	0.21	0.47	0.68	0.61	0.45	-0.22
6	21.04		1.97	0.30	-0.23	0.03	0.00	-0.02
	6.02	0.79E+06	1.99	0.00	-0.23	0.03	0.00	-0.02
	0.00	88.13	0.21	0.47	0.68	0.74	0.48	-0.18
7	21.04		2.19	0.43	-0.27	0.03	0.00	-0.02
	8.03	0.79E+06	2.22	0.11	-0.27	0.03	0.00	-0.02
	0.00	88.38	0.21	0.47	0.68	0.95	0.55	-0.23
8	21.04		2.50	0.58	-0.36	0.03	0.00	-0.01
	10.00	0.79E+06	2.58	0.14	-0.36	0.03	0.00	-0.01
	0.00	84.00	0.21	0.47	0.68	1.26	0.68	-0.32
9	21.15		2.74	0.78	-0.37	0.01	0.00	-0.01
	12.01	0.80E+06	2.84	0.18	-0.37	0.01	0.00	-0.01
	0.00	86.48	0.21	0.45	0.66	1.52	0.81	-0.34
10	21.15		2.92	0.91	-0.38	0.01	0.00	-0.02
	14.00	0.80E+06	3.05	0.17	-0.38	0.01	0.00	-0.02
	0.00	88.55	0.21	0.46	0.66	1.76	0.91	-0.35
11	21.04		3.08	1.06	-0.37	0.01	0.00	-0.01
	15.99	0.79E+06	3.25	0.17	-0.37	0.01	0.00	-0.01
	0.00	88.98	0.21	0.46	0.66	1.84	1.02	-0.33
12	21.04		3.18	1.20	-0.33	0.02	0.00	-0.03
	18.01	0.79E+06	3.39	0.18	-0.33	0.02	0.01	-0.03
	0.00	85.71	0.21	0.46	0.66	1.95	1.12	-0.29
13	21.15		3.30	1.35	-0.32	0.01	0.00	-0.01
	19.99	0.80E+06	3.56	0.14	-0.32	0.01	0.00	-0.01
	0.00	86.17	0.21	0.46	0.66	2.08	1.23	-0.29
14	21.15		3.34	1.50	-0.25	0.02	-0.01	-0.01
	22.01	0.79E+06	3.88	0.13	-0.25	0.02	0.00	-0.01
	0.00	93.15	0.21	0.46	0.67	2.13	1.33	-0.21

PROPULSIVE WING FORCE DATA

SUMMARY. RUN 193

PT	Q ALPHA BETA	REY NO HEIGHT	CL15 CSF15 CNWC	CD15 CAF15 CNWW	CPM15 CPM15 CNWT	CNM15 CNM15 CLTR	CYM15 CYM15 CNTR	CSF15 CSF15 CNTR
1	10.46		1.06	-0.24	-0.47	0.01	0.01	0.00
	-2.01	0.50E+06	1.06	-0.17	-0.47	0.01	0.01	0.00
	0.00	88.01	0.42	0.93	1.34	-0.42	0.46	-0.20
2	10.00		2.07	-0.18	-0.44	-0.01	0.01	-0.01
	-0.01	0.57E+06	2.07	-0.18	-0.44	-0.01	0.01	-0.01
	0.00	87.01	0.41	0.81	1.32	-0.30	0.44	-0.37
3	10.46		2.28	-0.07	-0.44	0.01	0.01	-0.01
	2.03	0.50E+06	2.28	-0.15	-0.44	0.01	0.01	-0.01
	0.00	88.64	0.42	0.93	1.34	-0.17	0.46	-0.37
4	10.58		2.38	0.02	-0.38	0.01	0.01	-0.03
	4.01	0.50E+06	2.37	-0.14	-0.38	0.01	0.02	-0.02
	0.00	87.79	0.41	0.92	1.33	-0.06	0.48	-0.32
5	10.58		2.52	0.14	-0.38	0.02	0.00	-0.02
	6.03	0.50E+06	2.53	-0.13	-0.38	0.02	0.00	-0.02
	0.00	87.03	0.42	0.92	1.33	0.06	0.49	-0.31
6	10.58		2.68	0.28	-0.30	0.03	0.01	-0.06
	8.00	0.57E+06	2.68	-0.12	-0.30	0.03	0.02	-0.06
	0.00	85.45	0.41	0.81	1.32	0.25	0.53	-0.28
7	10.58		2.81	0.40	-0.30	0.02	0.01	-0.05
	10.00	0.50E+06	2.83	-0.11	-0.30	0.02	0.01	-0.05
	0.00	84.87	0.42	0.92	1.34	0.44	0.58	-0.31
8	10.46		3.11	0.55	-0.36	0.01	-0.01	-0.01
	11.98	0.50E+06	3.15	-0.10	-0.36	0.01	0.00	-0.01
	0.00	85.00	0.42	0.93	1.35	0.80	0.65	-0.28
9	10.41		3.38	0.77	-0.46	0.01	0.00	-0.03
	14.00	0.57E+06	3.44	-0.07	-0.46	0.01	0.01	-0.03
	0.00	85.88	0.41	0.80	1.31	0.93	0.78	-0.30
10	10.58		3.84	0.88	-0.48	0.01	0.00	-0.04
	16.02	0.57E+06	3.77	-0.06	-0.48	0.01	0.00	-0.04
	0.00	84.02	0.41	0.81	1.32	1.18	0.81	-0.42
11	10.58		3.94	1.22	-0.55	0.01	0.00	-0.01
	18.00	0.50E+06	4.12	-0.06	-0.55	0.01	0.00	-0.01
	0.00	86.02	0.42	0.92	1.34	1.46	1.08	-0.47
12	10.58		4.08	1.40	-0.50	0.01	0.00	-0.03
	19.99	0.50E+06	4.28	-0.07	-0.50	0.01	0.00	-0.03
	0.00	88.00	0.42	0.92	1.34	1.80	1.15	-0.43
13	10.58		4.14	1.67	-0.43	0.02	-0.01	-0.02
	21.98	0.50E+06	4.42	-0.09	-0.43	0.02	0.00	-0.02
	0.00	95.08	0.42	0.92	1.34	1.88	1.24	-0.38

PROPULSIVE WING FORCE DATA

SUMMARY, RUN 194

PT	Q ALPHA BETA	REY NO HEIGHT	CLIS CNFIB CNUC	CDIS CAFIB CNUW	CPNIS CPNIB CNUT	CMNIS CMNIB CLTR	CYNIS CYNIB CDTR	CSFIS CSFIB CNTR
1	5.17		3.01	-0.83	-0.85	-0.01	0.01	0.01
	-2.00	0.39E+06	3.04	-0.72	-0.85	-0.01	0.01	0.01
	0.00	83.44	0.85	1.88	2.74	-1.08	0.60	-0.70
2	5.06		3.18	-0.74	-0.82	0.02	-0.01	0.04
	-0.02	0.39E+06	3.18	-0.74	-0.82	0.02	-0.01	0.04
	0.00	88.34	0.87	1.93	2.80	-1.86	0.54	-0.66
3	5.40		3.08	-0.58	-0.72	0.01	0.00	-0.02
	2.01	0.40E+06	3.07	-0.68	-0.72	0.01	0.00	-0.02
	0.00	88.60	0.82	1.81	2.63	-1.67	0.45	-0.57
4	5.29		3.36	-0.47	-0.74	0.01	0.00	-0.01
	3.99	0.40E+06	3.31	-0.71	-0.74	0.01	0.00	-0.01
	0.00	88.13	0.83	1.85	2.68	-1.54	0.42	-0.58
5	5.17		3.53	-0.33	-0.72	0.01	0.00	-0.04
	6.03	0.40E+06	3.49	-0.70	-0.72	0.01	0.00	-0.04
	0.00	87.88	0.84	1.87	2.71	-1.46	0.38	-0.56
6	5.40		3.71	-0.11	-0.72	0.01	0.01	-0.01
	8.04	0.40E+06	3.66	-0.62	-0.72	0.01	0.01	-0.01
	0.00	88.55	0.80	1.78	2.60	-1.10	0.42	-0.58
7	5.17		4.08	0.07	-0.77	0.01	0.01	-0.02
	10.01	0.40E+06	4.03	-0.64	-0.77	0.01	0.01	-0.02
	0.00	85.90	0.84	1.87	2.71	-0.96	0.45	-0.61
8	5.17		4.25	0.28	-0.76	0.01	0.00	-0.03
	12.01	0.40E+06	4.21	-0.63	-0.76	0.01	0.00	-0.03
	0.00	85.41	0.84	1.87	2.71	-0.80	0.46	-0.61
9	5.29		4.44	0.50	-0.77	0.04	0.01	-0.08
	14.02	0.40E+06	4.43	-0.58	-0.77	0.04	0.01	-0.08
	0.00	84.56	0.82	1.83	2.65	-0.50	0.52	-0.62
10	5.17		4.74	0.72	-0.81	0.05	0.00	-0.10
	16.01	0.40E+06	4.75	-0.61	-0.81	0.05	0.01	-0.10
	0.00	85.41	0.84	1.87	2.71	-0.32	0.57	-0.66
11	5.29		4.80	0.85	-0.81	0.07	-0.01	-0.10
	18.01	0.40E+06	4.83	-0.61	-0.81	0.08	0.01	-0.10
	0.00	87.68	0.82	1.83	2.65	-0.34	0.53	-0.46
12	5.40		4.85	1.14	-0.70	0.04	-0.01	-0.10
	19.99	0.40E+06	4.94	-0.59	-0.70	0.04	0.00	-0.10
	0.00	90.46	0.81	1.78	2.59	0.03	0.65	-0.56
13	5.29		4.88	1.33	-0.46	0.01	-0.01	-0.03
	21.98	0.40E+06	5.02	-0.59	-0.46	0.02	-0.01	-0.03
	0.00	97.63	0.83	1.82	2.64	-0.02	0.67	-0.32

PROPULSIVE WING FORCE DATA

SUMMARY, RUN 195

PT	Q ALPHA BETA	REY NO HEIGHT	CLIS CNFIB CNUC	CDIS CAFIB CNUW	CPNIS CPNIB CNUT	CMNIS CMNIB CLTR	CYNIS CYNIB CDTR	CSFIS CSFIB CNTR
1	2.65		4.88	-1.97	-1.88	0.01	0.01	-0.01
	-2.00	0.28E+06	4.94	-1.80	-1.88	0.01	0.01	-0.01
	0.00	85.68	1.85	3.65	5.30	-4.63	0.80	-1.39
2	2.65		5.07	-1.81	-1.80	-0.01	0.02	-0.02
	0.02	0.28E+06	5.07	-1.81	-1.80	-0.01	0.02	-0.02
	0.00	83.78	1.85	3.65	5.31	-4.51	0.82	-1.31
3	2.53		5.31	-1.73	-1.53	-0.02	0.03	-0.02
	2.03	0.28E+06	5.24	-1.82	-1.53	-0.02	0.03	-0.02
	0.00	87.45	1.75	3.82	5.55	-4.81	0.47	-1.22
4	2.65		5.13	-1.49	-1.32	0.02	0.01	-0.07
	4.01	0.28E+06	5.01	-1.84	-1.32	0.02	0.01	-0.07
	0.00	87.32	1.65	3.86	5.32	-4.61	0.28	-1.02
5	2.76		5.12	-1.24	-1.25	0.01	0.02	-0.07
	6.01	0.29E+06	4.96	-1.77	-1.25	0.01	0.03	-0.07
	0.00	88.38	1.58	3.50	5.08	-4.27	0.13	-0.96
6	2.65		5.60	-1.07	-1.33	0.01	0.03	-0.07
	8.01	0.28E+06	5.40	-1.85	-1.33	0.00	0.03	-0.07
	0.00	88.12	1.65	3.68	5.33	-4.27	0.01	-1.03
7	2.65		5.84	-0.84	-1.34	0.01	0.02	-0.10
	9.99	0.35E+06	5.60	-1.85	-1.34	0.01	0.02	-0.10
	0.00	84.88	1.65	3.68	5.34	-4.07	-0.10	-1.04
8	2.65		6.02	-0.57	-1.34	0.01	0.03	-0.15
	11.99	0.28E+06	5.77	-1.81	-1.34	0.00	0.03	-0.15
	0.00	85.80	1.66	3.68	5.34	-3.82	-0.17	-1.03
9	2.65		6.37	-0.28	-1.40	0.02	0.02	-0.14
	13.99	0.28E+06	6.12	-1.79	-1.40	0.01	0.02	-0.14
	0.00	85.99	1.66	3.69	5.34	-3.60	-0.20	-1.10
10	2.53		6.87	0.04	-1.43	0.01	0.01	-0.15
	16.00	0.28E+06	6.61	-1.85	-1.43	0.01	0.02	-0.15
	0.00	85.29	1.74	3.86	5.60	-3.55	-0.26	-1.11
11	2.65		6.76	0.38	-1.32	0.04	0.00	-0.10
	17.99	0.28E+06	6.55	-1.73	-1.32	0.03	0.02	-0.10
	0.00	85.35	1.66	3.68	5.35	-3.17	-0.26	-1.02
12	2.53		7.30	0.72	-1.43	0.02	-0.01	-0.09
	20.01	0.28E+06	7.10	-1.62	-1.43	0.03	-0.01	-0.09
	0.00	91.34	1.73	3.85	5.58	-3.08	-0.31	-1.11
13	2.65		7.07	1.00	-1.23	0.04	-0.01	-0.15
	21.99	0.28E+06	6.93	-1.72	-1.23	0.04	0.01	-0.15
	0.00	98.58	1.85	3.68	5.33	-2.80	-0.33	-0.93

PROPULSIVE WING FORCE DATA

SUMMARY, RUN 196

PT	Q ALPHA BETA	REY NO HEIGHT	CLIS CRFIB CNUC	CDIS CAFIB CNUN	CPMIS CPMIB CNUT	CMMIS CMMIB CLTR	CYMIS CYMIB CDTR	CSFIS CSFIB CNTR
1	20.92		1.47	0.03	-0.32	-0.04	0.00	-0.00
	-2.05	0.79E+06	1.46	0.00	-0.32	-0.04	0.00	-0.00
	5.01	88.30	0.21	0.47	0.88	0.25	0.30	-0.28
2	21.04		1.55	0.06	-0.29	-0.03	0.01	-0.00
	0.02	0.79E+06	1.55	0.08	-0.29	-0.03	0.01	-0.00
	5.01	87.56	0.21	0.47	0.88	0.33	0.40	-0.25
3	21.04		1.06	0.15	-0.24	-0.02	0.01	-0.12
	2.02	0.79E+06	1.06	0.09	-0.24	-0.02	0.01	-0.12
	5.01	88.55	0.21	0.47	0.88	0.42	0.42	-0.21
4	20.92		1.82	0.24	-0.35	-0.01	0.01	-0.13
	4.03	0.79E+06	1.83	0.11	-0.35	-0.01	0.01	-0.13
	5.01	88.98	0.21	0.47	0.88	0.87	0.47	-0.31
5	21.15		2.07	0.34	-0.33	0.00	0.01	-0.13
	6.08	0.79E+06	2.09	0.12	-0.33	0.00	0.01	-0.13
	5.01	88.56	0.21	0.47	0.88	0.83	0.52	-0.29
6	21.04		2.27	0.45	-0.35	0.00	0.01	-0.13
	8.06	0.79E+06	2.31	0.13	-0.35	0.00	0.01	-0.13
	5.01	88.27	0.21	0.47	0.88	1.02	0.59	-0.31
7	20.81		2.51	0.58	-0.37	0.01	0.00	-0.13
	10.06	0.79E+06	2.58	0.14	-0.37	0.01	0.00	-0.13
	5.01	85.48	0.22	0.47	0.88	1.24	0.88	-0.33
8	20.92		2.75	0.74	-0.41	0.00	0.01	-0.13
	11.98	0.79E+06	2.84	0.15	-0.41	0.00	0.01	-0.13
	5.01	85.15	0.21	0.47	0.88	1.48	0.78	-0.3[illegible]
9	20.58		2.87	0.92	-0.41	-0.02	0.01	-0.12
	14.02	0.78E+06	3.10	0.17	-0.41	-0.02	0.00	-0.12
	5.01	88.93	0.22	0.47	0.88	1.88	0.83	-0.37
10	21.15		3.10	1.06	-0.40	-0.01	0.00	-0.11
	16.02	0.79E+06	3.27	0.17	-0.40	-0.01	0.00	-0.11
	5.01	88.88	0.21	0.46	0.88	1.85	1.03	-0.38
11	21.04		3.24	1.22	-0.40	-0.01	0.00	-0.11
	17.99	0.79E+06	3.46	0.15	-0.40	-0.01	0.00	-0.11
	5.01	85.88	0.22	0.46	0.88	1.98	1.14	-0.38
12	20.80		3.33	1.37	-0.32	-0.01	0.00	-0.10
	20.01	0.78E+06	3.56	0.15	-0.32	-0.01	0.00	-0.10
	5.01	88.23	0.22	0.47	0.88	2.06	1.24	-0.28
13	20.92		3.41	1.53	-0.28	0.01	-0.01	-0.08
	22.02	0.79E+06	3.74	0.14	-0.28	0.01	-0.01	-0.08
	5.01	93.25	0.22	0.46	0.88	2.17	1.38	-0.24

PROPULSIVE WING FORCE DATA

SUMMARY, RUN 197

PT	Q ALPHA BETA	REY NO HEIGHT	CLIS CRFIB CNUC	CDIS CAFIB CNUN	CPMIS CPMIB CNUT	CMMIS CMMIB CLTR	CYMIS CYMIB CDTR	CSFIS CSFIB CNTR
1	10.35		2.00	-0.23	-0.48	-0.04	0.00	-0.08
	-2.03	0.58E+06	2.01	-0.18	-0.48	-0.04	0.00	-0.08
	5.01	87.19	0.44	0.94	1.38	-0.44	0.40	-0.41
2	10.80		2.07	-0.15	-0.45	-0.05	-0.01	-0.07
	0.01	0.57E+06	2.07	-0.15	-0.45	-0.05	-0.01	-0.07
	5.01	87.78	0.42	0.91	1.33	-0.32	0.46	-0.37
3	10.58		2.24	-0.08	-0.44	-0.05	0.00	-0.08
	2.01	0.58E+06	2.24	-0.18	-0.44	-0.05	-0.01	-0.08
	5.01	88.38	0.42	0.93	1.35	-0.19	0.46	-0.37
4	10.58		2.38	0.02	-0.40	-0.04	0.00	-0.10
	4.05	0.58E+06	2.35	-0.15	-0.40	-0.04	0.00	-0.10
	5.01	37.87	0.42	0.92	1.35	-0.09	0.46	-0.32
5	10.58		2.50	0.15	-0.45	-0.03	0.01	-0.12
	6.02	0.58E+06	2.50	-0.13	-0.45	-0.03	0.01	-0.12
	5.01	88.74	0.42	0.92	1.35	0.13	0.51	-0.37
6	10.35		2.82	0.28	-0.44	-0.04	0.01	-0.14
	8.03	0.58E+06	2.83	-0.12	-0.44	-0.04	0.01	-0.14
	5.01	88.48	0.43	0.94	1.37	0.29	0.56	-0.36
7	10.35		3.02	0.43	-0.45	-0.03	0.02	-0.17
	10.04	0.58E+06	3.05	-0.11	-0.45	-0.03	0.01	-0.17
	5.01	85.28	0.43	0.94	1.38	0.48	0.82	-0.38
8	10.23		3.23	0.58	-0.48	-0.03	0.[illegible]	-0.18
	12.01	0.55E+06	3.28	-0.10	-0.48	-0.03	0.[illegible]	-0.18
	5.01	87.88	0.44	0.95	1.39	0.68	0.[illegible]	-0.38
9	10.23		3.45	0.78	-0.48	-0.03	0.01	-0.17
	14.08	0.55E+06	3.54	-0.09	-0.48	-0.03	0.00	-0.17
	5.01	85.85	0.44	0.95	1.40	0.88	0.78	-0.38
10	10.35		3.72	1.01	-0.50	-0.03	-0.01	-0.13
	16.04	0.58E+06	3.85	-0.05	-0.50	-0.02	-0.02	-0.13
	5.01	88.58	0.44	0.94	1.38	1.17	0.94	-0.42
11	10.80		3.95	1.24	-0.50	-0.03	0.00	-0.12
	18.08	0.57E+06	4.15	-0.04	-0.50	-0.03	-0.01	-0.12
	5.01	85.85	0.42	0.91	1.33	1.50	1.08	-0.50
12	10.35		4.11	1.43	-0.52	-0.03	-0.01	-0.15
	20.05	0.58E+06	4.35	-0.07	-0.52	-0.02	-0.02	-0.15
	5.01	89.09	0.44	0.94	1.38	1.58	1.18	-0.44
13	10.58		4.08	1.57	-0.35	-0.01	-0.01	-0.16
	22.06	0.58E+06	4.38	-0.06	-0.35	0.00	-0.01	-0.14
	5.01	86.33	0.43	0.92	1.35	1.82	1.24	-0.27

PROPULSIVE WING FORCE DATA

SUMMARY, RUN 100

PT	Q ALPHA BETA	REY NO HEIGHT	CL15 CDF15 CNBC	CD15 CAF15 CNBW	CPR15 CPR15 CNBT	CNR15 CNR15 CLTR	CYR15 CYR15 CDTR	CSF15 CSF15 CNTR
1	-5.29		2.06	-0.79	-0.04	-0.06	-0.02	-0.15
	-2.01	0.40E+06	2.01	-0.80	-0.04	-0.06	-0.02	-0.10
	5.01	87.87	0.86	1.04	2.66	-1.79	0.81	-0.86
2	5.17		3.06	-0.72	-0.03	-0.07	-0.02	-0.10
	-0.07	0.32E+06	3.06	-0.71	-0.03	-0.07	-0.02	-0.10
	5.01	85.77	0.86	1.86	2.75	-1.87	0.55	-0.67
3	5.29		3.15	-0.60	-0.73	-0.07	-0.02	-0.00
	2.04	0.40E+06	3.12	-0.71	-0.73	-0.07	-0.02	-0.00
	5.01	85.97	0.84	1.85	2.80	-1.73	0.47	-0.56
4	5.17		3.20	-0.60	-0.72	-0.06	-0.01	-0.11
	4.04	0.30E+06	3.31	-0.72	-0.73	-0.06	-0.02	-0.11
	5.01	88.44	0.86	1.90	2.76	-1.87	0.43	-0.58
5	5.17		3.56	-0.34	-0.71	-0.00	0.00	-0.10
	6.02	0.30E+06	3.56	-0.71	-0.71	-0.00	-0.01	-0.10
	5.01	87.26	0.86	1.90	2.76	-1.40	0.40	-0.55
6	5.17		3.79	-0.17	-0.73	-0.00	0.00	-0.11
	8.01	0.40E+06	3.73	-0.70	-0.73	-0.00	-0.01	-0.11
	5.01	85.81	0.86	1.90	2.76	-1.20	0.30	-0.50
7	5.00		4.00	0.03	-0.78	-0.00	0.00	-0.14
	10.05	0.30E+06	4.03	-0.60	-0.78	-0.07	-0.02	-0.14
	5.01	85.83	0.86	1.94	2.82	-1.12	0.42	-0.02
8	5.29		4.13	0.24	-0.05	-0.06	0.00	-0.15
	12.00	0.40E+06	4.00	-0.53	-0.05	-0.06	-0.01	-0.15
	5.01	88.76	0.84	1.85	2.08	-0.86	0.43	-0.40
9	5.20		4.50	0.49	-0.04	-0.05	0.01	-0.10
	14.00	0.40E+06	4.49	-0.82	-0.04	-0.05	0.00	-0.10
	5.01	87.17	0.84	1.85	2.70	-0.40	0.52	-0.00
10	5.17		4.73	0.71	-0.03	-0.05	0.00	-0.10
	16.00	0.40E+06	4.75	-0.82	-0.03	-0.05	-0.01	-0.10
	5.01	87.47	0.86	1.90	2.76	-0.37	0.56	-0.06
11	5.29		4.76	0.91	-0.72	-0.04	0.01	-0.10
	18.00	0.40E+06	4.81	-0.80	-0.72	-0.04	-0.01	-0.10
	5.01	88.56	0.84	1.85	2.80	-0.21	0.56	-0.57
12	5.00		5.17	1.21	-0.77	-0.04	0.02	-0.23
	20.04	0.30E+06	5.27	-0.04	-0.77	-0.04	0.00	-0.23
	5.01	90.81	0.86	1.93	2.81	-0.01	0.89	-0.01
13	5.29		5.20	1.51	-0.70	-0.06	0.01	-0.10
	22.20	0.40E+06	5.44	-0.50	-0.70	-0.06	-0.02	-0.10
	5.01	90.40	0.85	1.85	2.00	0.23	0.02	-0.55

PROPULSIVE WING FORCE DATA

SUMMARY, RUN 100

PT	Q ALPHA BETA	REY NO HEIGHT	CL15 CDF15 CNBC	CD15 CAF15 CNBW	CPR15 CPR15 CNBT	CNR15 CNR15 CLTR	CYR15 CYR15 CDTR	CSF15 CSF15 CNTR
15	1.30		8.06	-4.30	-2.00	0.01	-0.01	0.00
	-2.04	0.21E+06	8.21	-4.00	-2.00	0.01	-0.01	0.00
	-0.01	87.75	3.40	7.45	10.94	-10.37	1.06	-2.30
16	1.27		8.40	-3.87	-2.00	0.02	0.00	-0.00
	-0.03	0.20E+06	8.40	-3.96	-2.00	0.02	0.00	-0.00
	-0.01	87.00	3.56	7.56	11.11	-10.00	0.84	-2.33
17	1.27		9.31	-3.04	-3.06	0.03	0.04	0.00
	2.00	0.20E+06	9.17	-4.10	-3.05	0.03	0.04	0.00
	-0.01	87.54	3.79	7.00	11.78	-10.00	0.56	-2.42
18	1.30		8.07	-3.10	-2.72	0.02	0.02	0.13
	4.00	0.21E+06	8.32	-3.77	-2.72	0.02	0.02	0.13
	-0.01	88.54	3.47	7.31	10.78	-10.01	0.21	-2.15
19	1.30		8.06	-2.80	-2.04	0.00	-0.01	0.20
	6.10	0.21E+06	8.00	-3.00	-2.04	0.00	-0.01	0.20
	-0.01	88.00	3.42	7.31	10.73	-0.00	-0.15	-2.00
20	1.27		10.25	-2.26	-2.04	0.00	0.00	0.00
	8.06	0.20E+06	9.00	-4.07	-2.04	0.01	0.00	0.00
	-0.01	88.10	3.68	8.10	11.70	-10.03	-0.07	-2.17
21	1.30		9.94	-2.70	-2.54	0.00	0.05	-0.07
	10.00	0.21E+06	8.93	-4.31	-2.54	0.01	0.05	-0.07
	-0.01	88.54	3.30	7.47	10.86	-0.07	-1.16	-1.02
22	1.30		9.83	-2.22	-2.30	0.00	0.04	-0.10
	12.04	0.21E+06	9.13	-4.22	-2.55	0.01	0.04	-0.10
	-0.01	83.20	3.30	7.45	10.83	-0.72	-1.48	-1.03
23	1.30		9.00	-1.70	-2.45	0.04	0.04	-0.11
	14.04	0.21E+06	8.90	-4.07	-2.45	0.02	0.05	-0.11
	-0.01	87.15	3.10	7.00	10.20	-0.27	-1.70	-1.00
24	1.40		8.05	-1.33	-2.03	0.04	0.03	-0.12
	16.05	0.21E+06	8.24	-3.75	-2.03	0.03	0.04	-0.12
	-0.01	87.75	2.97	6.50	9.53	-0.56	-1.87	-1.51
25	1.30		10.22	-0.90	-2.57	0.04	0.03	-0.13
	18.03	0.21E+06	9.53	-4.05	-2.57	0.03	0.04	-0.13
	-0.01	88.18	3.22	7.00	10.31	-0.56	-2.15	-2.00
26	1.27		10.00	-0.75	-2.41	0.04	0.02	-0.14
	20.00	0.20E+06	9.94	-4.43	-2.41	0.03	0.03	-0.14
	-0.01	82.22	3.52	7.70	11.30	-0.74	-2.04	-1.70

PROPULSIVE WING FORCE DATA

SUMMARY, RUN 200

PT	Q ALPHA BETA	REY NO HEIGHT	CL15 CNF10 CNUC	CD15 CAF10 CNUA	CPR15 CPR10 CNUT	CRN15 CRN10 CLTR	CYR15 CYR10 CDTR	CSF15 CSF10 CNTR
1	21.04		1.72	0.11	-0.43	-0.00	-0.01	-0.23
	0.00	0.00E+00	1.72	0.11	-0.43	-0.00	-0.01	-0.23
	15.00	85.34	0.21	0.46	0.00	0.50	0.43	-0.30
1	20.02		1.73	0.11	-0.44	-0.00	-0.01	-0.23
	0.00	0.00E+00	1.73	0.11	-0.44	-0.00	-0.01	-0.23
	15.00	85.34	0.22	0.46	0.70	0.51	0.43	-0.40
2	21.15		1.00	0.10	-0.37	-0.00	0.01	-0.18
	0.04	0.00E+00	1.00	0.10	-0.37	-0.00	0.01	-0.18
	10.10	85.34	0.21	0.47	0.00	0.45	0.41	-0.33
3	21.04		1.50	0.00	-0.31	-0.00	0.00	-0.13
	0.00	0.00E+00	1.50	0.00	-0.31	-0.00	0.00	-0.13
	7.00	85.34	0.22	0.46	0.00	0.30	0.40	-0.27
4	21.04		1.50	0.00	-0.29	-0.04	0.01	-0.11
	0.00	0.00E+00	1.50	0.00	-0.29	-0.04	0.01	-0.11
	5.00	85.34	0.22	0.46	0.00	0.33	0.30	-0.25
5	21.04		1.50	0.00	-0.27	-0.02	0.01	-0.07
	0.10	0.00E+00	1.50	0.00	-0.27	-0.02	0.01	-0.07
	4.00	85.34	0.22	0.47	0.00	0.33	0.30	-0.23
6	21.27		1.51	0.00	-0.24	-0.01	0.01	-0.03
	0.12	0.01E+00	1.51	0.07	-0.24	-0.01	0.01	-0.03
	3.00	85.34	0.21	0.47	0.00	0.30	0.30	-0.20
7	21.04		1.54	0.00	-0.25	0.00	0.00	0.02
	0.13	0.00E+00	1.54	0.07	-0.25	0.00	0.00	0.02
	0.00	85.34	0.22	0.47	0.00	0.22	0.30	-0.21
8	21.04		1.54	0.00	-0.25	0.03	0.00	0.04
	0.15	0.00E+00	1.54	0.00	-0.25	0.03	0.00	0.04
	-2.02	85.34	0.22	0.47	0.00	0.22	0.30	-0.21
9	20.02		1.54	0.07	-0.25	0.05	0.00	0.00
	0.15	0.00E+00	1.54	0.07	-0.25	0.05	0.00	0.00
	-4.02	85.34	0.22	0.46	0.70	0.31	0.20	-0.21
10	21.15		1.00	0.00	-0.31	0.05	-0.01	0.13
	0.14	0.01E+00	1.00	0.00	-0.31	0.05	-0.01	0.13
	-5.00	85.34	0.22	0.47	0.00	0.30	0.30	-0.27
11	21.04		1.61	0.00	-0.32	0.07	-0.01	0.17
	0.13	0.00E+00	1.61	0.00	-0.32	0.07	-0.01	0.17
	-8.00	85.34	0.22	0.46	0.70	0.30	0.30	-0.30
12	21.04		1.64	0.00	-0.35	0.07	-0.01	0.21
	0.12	0.00E+00	1.64	0.00	-0.35	0.07	-0.01	0.21
	-10.10	85.34	0.22	0.46	0.00	0.42	0.40	-0.31
13	21.15		1.70	0.10	-0.38	0.00	0.01	0.26
	0.13	0.01E+00	1.70	0.00	-0.38	0.00	0.01	0.26
	-15.02	85.34	0.22	0.46	0.00	0.46	0.41	-0.34

PROPULSIVE WING FORCE DATA

SUMMARY, RUN 201

PT	Q ALPHA BETA	REY NO HEIGHT	CL15 CNF10 CNUC	CD15 CAF10 CNUA	CPR15 CPR10 CNUT	CRN15 CRN10 CLTR	CYR15 CYR10 CDTR	CSF15 CSF10 CNTR
1	21.04		2.30	0.40	-0.44	-0.00	0.01	-0.23
	7.07	0.00E+00	2.44	0.15	-0.44	-0.00	-0.01	-0.23
	15.00	85.46	0.21	0.46	0.07	1.17	0.02	-0.40
2	21.27		2.34	0.40	-0.40	-0.04	0.01	-0.18
	7.00	0.01E+00	2.30	0.15	-0.40	-0.04	0.00	-0.18
	10.02	85.46	0.21	0.45	0.00	1.14	0.01	-0.30
3	21.15		2.34	0.47	-0.40	-0.00	0.01	-0.17
	0.00	0.01E+00	2.30	0.14	-0.40	-0.00	0.01	-0.17
	7.00	85.46	0.21	0.46	0.07	1.12	0.01	-0.30
4	21.15		2.30	0.47	-0.30	0.00	0.01	-0.14
	0.01	0.01E+00	2.34	0.14	-0.33	0.00	0.01	-0.14
	0.00	85.46	0.21	0.46	0.07	1.00	0.00	-0.34
5	21.15		2.26	0.46	-0.35	0.01	0.01	-0.11
	0.04	0.01E+00	2.30	0.14	-0.35	0.01	0.01	-0.11
	3.07	85.46	0.21	0.46	0.07	1.06	0.50	-0.31
6	21.15		2.19	0.45	-0.21	0.02	0.00	-0.05
	0.06	0.01E+00	2.23	0.13	-0.21	0.02	0.00	-0.05
	1.00	85.46	0.21	0.46	0.07	0.00	0.50	-0.27
7	21.15		2.22	0.45	-0.22	0.03	0.01	-0.03
	0.00	0.01E+00	2.26	0.12	-0.22	0.03	0.01	-0.03
	0.00	85.46	0.21	0.46	0.07	1.01	0.50	-0.20
8	20.02		2.18	0.45	-0.25	0.03	0.00	0.03
	0.12	0.00E+00	2.22	0.14	-0.25	0.03	0.00	0.03
	-2.00	85.46	0.21	0.46	0.07	0.00	0.50	-0.22
9	20.02		2.18	0.45	-0.25	0.02	-0.01	0.10
	0.12	0.00E+00	2.23	0.14	-0.25	0.02	0.00	0.10
	-4.00	85.46	0.21	0.46	0.07	0.00	0.50	-0.22
10	20.02		2.24	0.47	-0.30	0.00	-0.01	0.15
	0.11	0.00E+00	2.30	0.15	-0.30	0.02	-0.01	0.15
	-6.04	85.46	0.21	0.46	0.07	1.03	0.00	-0.30
11	21.04		2.26	0.47	-0.30	0.04	-0.01	0.18
	0.12	0.00E+00	2.31	0.15	-0.30	0.04	-0.01	0.18
	-8.02	85.46	0.21	0.46	0.00	1.06	0.00	-0.27
12	21.04		2.20	0.50	-0.30	0.06	-0.01	0.20
	0.11	0.00E+00	2.43	0.16	-0.30	0.06	0.00	0.20
	-10.01	85.46	0.21	0.46	0.07	1.17	0.03	-0.30
13	20.02		2.30	0.50	-0.35	0.00	0.01	0.22
	0.15	0.00E+00	2.43	0.15	-0.35	0.00	0.02	0.22
	-15.00	85.46	0.21	0.46	0.07	1.17	0.02	-0.31

PROPULSIVE WING FORCE DATA

SUMMARY, RUN 302

PT	Q ALPHA BETA	REY NO HEIGHT	CL15 CXF10 CNWC	CD15 CAF10 CNWA	CPM15 CPM10 CNWT	CRM15 CRM10 CLTR	CYM15 CYM10 CNTR	CSF15 CSF10 CNTR
1	10.50		2.92	0.34	-0.52	-0.11	0.00	-0.25
	8.02	0.57E+06	2.94	-0.07	-0.52	-0.11	-0.01	-0.25
	15.00	87.51	0.43	0.02	1.35	0.48	0.81	-0.45
2	10.81		2.88	0.33	-0.56	-0.07	0.02	-0.10
	8.02	0.56E+06	2.90	-0.08	-0.56	-0.07	0.01	-0.10
	0.98	87.51	0.42	0.01	1.33	0.50	0.56	-0.48
3	10.50		2.89	0.31	-0.54	-0.06	0.02	-0.15
	8.03	0.57E+06	2.90	-0.09	-0.54	-0.06	0.01	-0.15
	7.86	87.51	0.43	0.03	1.35	0.45	0.58	-0.46
4	10.35		2.86	0.29	-0.49	-0.04	0.02	-0.14
	8.03	0.57E+06	2.86	-0.11	-0.49	-0.04	0.02	-0.14
	5.99	87.51	0.44	0.04	1.36	0.36	0.56	-0.41
5	10.50		2.75	0.29	-0.41	-0.02	0.02	-0.08
	8.06	0.57E+06	2.76	-0.10	-0.41	-0.02	0.02	-0.08
	4.00	87.51	0.43	0.03	1.36	0.30	0.55	-0.33
6	10.50		2.73	0.28	-0.37	0.01	0.01	-0.04
	8.07	0.57E+06	2.74	-0.10	-0.37	0.01	0.01	-0.04
	2.00	87.51	0.43	0.03	1.36	0.29	0.55	-0.30
7	10.46		2.67	0.27	-0.30	0.03	0.00	-0.01
	8.08	0.57E+06	2.68	-0.10	-0.30	0.03	0.01	-0.01
	0.00	87.51	0.43	0.04	1.37	0.29	0.54	-0.23
8	10.46		2.72	0.28	-0.35	0.05	0.01	0.01
	8.00	0.57E+06	2.73	-0.11	-0.35	0.05	0.01	0.01
	-2.00	87.51	0.43	0.04	1.37	0.24	0.55	-0.27
9	10.46		2.73	0.27	-0.37	0.05	0.00	0.00
	8.00	0.57E+06	2.74	-0.12	-0.37	0.05	0.00	0.00
	-4.00	87.51	0.43	0.04	1.37	0.25	0.54	-0.29
10	10.46		2.80	0.30	-0.50	0.06	-0.02	0.14
	8.00	0.57E+06	2.81	-0.11	-0.50	0.07	-0.01	0.14
	-6.02	87.51	0.44	0.04	1.36	0.42	0.57	-0.42
11	10.50		2.81	0.29	-0.45	0.06	-0.01	0.18
	8.00	0.57E+06	2.82	-0.11	-0.45	0.06	0.00	0.18
	-8.00	87.55	0.43	0.03	1.36	0.26	0.56	-0.37
12	10.46		2.91	0.31	-0.50	0.10	-0.01	0.21
	8.00	0.57E+06	2.93	-0.10	-0.50	0.10	0.00	0.21
	-10.01	87.55	0.43	0.04	1.36	0.43	0.58	-0.43
13	10.46		3.01	0.33	-0.56	0.13	-0.01	0.28
	8.00	0.57E+06	3.03	-0.10	-0.56	0.13	0.01	0.28
	-15.01	87.55	0.43	0.04	1.37	0.54	0.60	-0.40

PROPULSIVE WING FORCE DATA

SUMMARY, RUN 303

PT	Q ALPHA BETA	REY NO HEIGHT	CL15 CXF10 CNWC	CD15 CAF10 CNWA	CPM15 CPM10 CNWT	CRM15 CRM10 CLTR	CYM15 CYM10 CNTR	CSF15 CSF10 CNTR
1	10.81		2.10	-0.14	-0.52	-0.11	-0.01	-0.22
	-0.03	0.56E+06	2.10	-0.13	-0.52	-0.11	-0.01	-0.22
	15.01	87.24	0.42	0.01	1.33	-0.10	0.46	-0.45
2	10.50		2.14	-0.15	-0.49	-0.00	-0.01	-0.13
	-0.03	0.57E+06	2.14	-0.15	-0.49	-0.00	-0.01	-0.13
	10.10	87.24	0.43	0.03	1.35	-0.25	0.46	-0.42
3	10.46		2.12	-0.17	-0.48	-0.07	0.00	-0.10
	-0.03	0.57E+06	2.12	-0.18	-0.48	-0.07	0.00	-0.10
	8.01	87.28	0.44	0.05	1.36	-0.30	0.45	-0.41
4	10.46		2.10	-0.18	-0.50	-0.05	0.00	-0.05
	-0.02	0.57E+06	2.10	-0.18	-0.50	-0.05	0.00	-0.05
	5.99	87.28	0.43	0.04	1.37	-0.26	0.46	-0.43
5	10.46		2.10	-0.17	-0.44	-0.04	0.00	-0.03
	-0.01	0.57E+06	2.10	-0.17	-0.44	-0.04	0.00	-0.03
	4.00	87.28	0.43	0.04	1.37	-0.32	0.45	-0.37
6	10.50		2.07	-0.16	-0.43	-0.03	0.00	0.01
	0.00	0.57E+06	2.07	-0.16	-0.43	-0.03	0.00	0.01
	1.98	87.28	0.43	0.03	1.36	-0.32	0.45	-0.35
7	10.50		2.08	-0.17	-0.43	0.01	0.01	0.02
	0.01	0.57E+06	2.08	-0.17	-0.43	0.01	0.01	0.02
	0.00	87.28	0.43	0.03	1.35	-0.32	0.44	-0.35
8	10.35		2.13	-0.17	-0.48	0.04	0.00	0.06
	0.01	0.57E+06	2.13	-0.17	-0.48	0.04	0.00	0.06
	-2.01	87.28	0.44	0.05	1.40	-0.31	0.45	-0.38
9	10.46		2.09	-0.17	-0.45	0.07	0.01	0.08
	0.02	0.57E+06	2.09	-0.18	-0.45	0.07	0.01	0.08
	-4.01	87.28	0.44	0.04	1.38	-0.33	0.44	-0.37
10	10.50		2.13	-0.17	-0.48	0.07	0.00	0.13
	0.02	0.57E+06	2.13	-0.17	-0.48	0.07	0.00	0.13
	-6.01	87.28	0.43	0.03	1.36	-0.27	0.44	-0.41
11	10.50		2.12	-0.17	-0.48	0.08	0.00	0.16
	0.02	0.57E+06	2.12	-0.18	-0.48	0.08	0.00	0.16
	-8.01	87.28	0.43	0.03	1.36	-0.28	0.43	-0.40
12	10.50		2.15	-0.16	-0.50	0.10	0.00	0.20
	0.02	0.57E+06	2.15	-0.17	-0.50	0.10	0.00	0.20
	-10.00	87.28	0.43	0.04	1.37	-0.25	0.45	-0.42
13	10.50		2.17	-0.16	-0.49	0.13	0.02	0.27
	0.03	0.57E+06	2.17	-0.17	-0.49	0.13	0.02	0.27
	-14.70	87.28	0.43	0.04	1.37	-0.22	0.44	-0.42

PROPULSIVE WING FORCE DATA

SUMMARY, RUN 204

PT	Q ALPHA BETA	REY NO HEIGHT	CL1S CSF1Q CNUC	CD1S CAF1Q CNUW	CPM1S CPM1Q CMUT	CBM1S CBM1Q CLTR	CYM1S CYM1Q CDTR	CSF1S CSF1Q CNTR
1	5.20		3.17	-0.00	-0.05	-0.12	-0.01	-0.22
	0.01	0.41E+06	3.17	-0.00	-0.05	-0.12	-0.01	-0.22
	15.01	87.18	0.00	1.86	2.72	-1.00	0.52	-0.70
2	5.20		3.16	-0.00	-0.04	-0.00	0.00	-0.14
	0.01	0.41E+06	3.16	-0.00	-0.04	-0.00	0.00	-0.14
	10.00	87.18	0.00	1.86	2.72	-1.03	0.52	-0.00
3	5.20		3.11	-0.00	-0.03	-0.07	-0.01	-0.07
	0.02	0.41E+06	3.11	-0.00	-0.03	-0.07	-0.01	-0.07
	7.00	87.18	0.05	1.85	2.71	-1.00	0.52	-0.00
4	5.40		2.99	-0.70	-0.77	-0.06	0.00	-0.04
	0.02	0.41E+06	2.99	-0.70	-0.77	-0.06	0.00	-0.04
	5.97	87.18	0.04	1.83	2.67	-1.70	0.49	-0.63
5	5.17		3.15	-0.73	-0.83	-0.04	0.01	0.00
	0.02	0.40E+06	3.15	-0.73	-0.83	-0.04	0.01	0.00
	4.00	87.18	0.00	1.91	2.79	-1.74	0.51	-0.66
6	5.20		3.06	-0.72	-0.78	-0.03	0.00	0.03
	0.02	0.41E+06	3.06	-0.72	-0.78	-0.03	0.00	0.03
	1.98	87.18	0.06	1.85	2.70	-1.73	0.50	-0.63
7	5.20		3.07	-0.75	-0.78	0.00	0.01	0.07
	0.02	0.41E+06	3.07	-0.75	-0.78	0.00	0.01	0.07
	-0.01	87.18	0.07	1.80	2.76	-1.78	0.48	-0.61
8	5.17		3.11	-0.76	-0.79	0.03	0.01	0.08
	0.02	0.40E+06	3.11	-0.76	-0.79	0.03	0.01	0.08
	-2.01	87.18	0.00	1.93	2.81	-1.81	0.50	-0.64
9	5.17		3.10	-0.77	-0.79	0.07	0.01	0.13
	0.03	0.40E+06	3.10	-0.77	-0.79	0.07	0.01	0.13
	-4.00	87.18	0.00	1.94	2.82	-1.85	0.49	-0.63
10	5.17		3.12	-0.76	-0.81	0.00	0.01	0.11
	0.03	0.40E+06	3.11	-0.77	-0.81	0.00	0.01	0.11
	-6.02	87.18	0.00	1.94	2.83	-1.81	0.49	-0.65
11	5.20		3.13	-0.73	-0.82	0.10	0.02	0.10
	0.04	0.41E+06	3.13	-0.73	-0.82	0.10	0.02	0.10
	-8.03	87.18	0.07	1.90	2.77	-1.70	0.50	-0.67
12	5.20		3.11	-0.72	-0.83	0.11	0.02	0.20
	0.04	0.41E+06	3.11	-0.72	-0.83	0.11	0.02	0.20
	-10.02	87.18	0.07	1.88	2.75	-1.71	0.51	-0.67
13	5.20		3.13	-0.72	-0.80	0.15	0.03	0.28
	0.05	0.41E+06	3.13	-0.73	-0.80	0.15	0.03	0.28
	-15.02	87.18	0.07	1.90	2.77	-1.00	0.50	-0.65

PROPULSIVE WING FORCE DATA

SUMMARY, RUN 205

PT	Q ALPHA BETA	REY NO HEIGHT	CL1S CSF1Q CNUC	CD1S CAF1Q CNUW	CPM1S CPM1Q CMUT	CBM1S CBM1Q CLTR	CYM1S CYM1Q CDTR	CSF1S CSF1Q CNTR
1	5.20		3.01	-0.14	-0.04	-0.10	0.03	-0.27
	0.01	0.41E+06	3.05	-0.00	-0.04	-0.10	0.01	-0.27
	15.01	87.52	0.00	1.80	2.77	-1.02	0.41	-0.00
2	5.40		3.73	-0.15	-0.73	-0.12	0.03	-0.10
	0.02	0.41E+06	3.07	-0.07	-0.73	-0.12	0.01	-0.10
	10.00	87.52	0.05	1.84	2.00	-1.00	0.30	-0.56
3	5.17		3.01	-0.15	-0.70	-0.11	0.03	-0.11
	0.02	0.40E+06	3.06	-0.00	-0.70	-0.11	0.01	-0.11
	8.01	87.52	0.00	1.93	2.02	-1.13	0.41	-0.63
4	5.17		3.03	-0.10	-0.71	-0.00	0.02	-0.00
	0.02	0.40E+06	2.77	-0.00	-0.71	-0.00	0.01	-0.00
	5.05	87.52	0.00	1.95	2.06	-1.23	0.40	-0.56
5	5.20		3.04	-0.13	-0.77	-0.07	0.03	-0.04
	0.03	0.41E+06	3.70	-0.07	-0.77	-0.07	0.01	-0.04
	4.01	87.52	0.07	1.00	2.75	-1.00	0.41	-0.02
6	5.20		3.02	-0.13	-0.75	-0.03	0.00	0.01
	0.04	0.41E+06	3.70	-0.00	-0.75	-0.03	0.00	0.01
	1.99	87.52	0.00	1.91	2.70	-1.13	0.42	-0.00
7	5.40		3.73	-0.13	-0.73	0.00	-0.01	0.04
	0.04	0.41E+06	3.00	-0.04	-0.73	0.00	-0.01	0.04
	-0.01	87.52	0.05	1.85	2.70	-1.10	0.41	-0.50
8	5.17		3.04	-0.10	-0.74	0.04	0.00	0.00
	0.04	0.40E+06	3.70	-0.00	-0.74	0.04	0.01	0.00
	-2.01	87.52	0.00	1.95	2.04	-1.20	0.40	-0.50
9	5.20		3.70	-0.15	-0.71	0.00	0.01	0.04
	0.05	0.41E+06	3.72	-0.00	-0.71	0.00	0.02	0.04
	-4.02	87.52	0.07	1.90	2.77	-1.17	0.30	-0.56
10	5.20		3.03	-0.14	-0.70	0.10	-0.01	0.13
	0.06	0.41E+06	3.77	-0.07	-0.70	0.10	0.00	0.13
	-6.00	87.52	0.07	1.90	2.77	-1.11	0.00	-0.61
11	5.20		3.04	-0.14	-0.77	0.12	-0.00	0.10
	0.06	0.41E+06	3.70	-0.00	-0.77	0.12	0.00	0.10
	-8.00	87.52	0.07	1.00	2.77	-1.10	0.40	-0.02
12	5.20		3.07	-0.15	-0.70	0.14	-0.02	0.20
	0.06	0.41E+06	3.01	-0.00	-0.70	0.14	0.00	0.20
	-10.01	87.52	0.00	1.01	2.70	-1.07	0.30	-0.04
13	5.17		3.00	-0.10	-0.70	0.20	-0.02	0.30
	0.07	0.40E+06	3.04	-0.72	-0.70	0.20	0.01	0.30
	-15.00	87.52	0.00	1.04	2.63	-1.15	0.37	-0.02

PROPULSIVE WING FORCE DATA

SUMMARY, RUN 200

PT	Q ALPHA BETA	REY NO WEIGHT	CL15 CNF16 CNUC	CD15 CAF16 CNWW	CPR15 CPR16 CNUT	CBR15 CBR16 CLTR	CYR15 CYR16 CDTR	CSF15 CSF16 CNTR
2	30.22		0.00	0.13	-0.12	0.00	-0.02	-0.03
	-2.06	0.97E+06	0.20	0.15	-0.12	0.00	-0.02	-0.03
	5.00	87.77	0.00	0.00	0.00	0.13	0.20	-0.00
3	30.25		0.52	0.10	-0.11	-0.01	-0.02	-0.02
	0.02	0.97E+06	0.52	0.10	-0.11	-0.01	-0.02	-0.02
	5.00	87.81	0.00	0.00	0.00	0.24	0.21	-0.00
4	30.23		0.02	0.10	-0.10	-0.01	-0.02	-0.02
	2.05	0.97E+06	0.03	0.10	-0.10	-0.01	-0.02	-0.02
	5.00	87.90	0.00	0.00	0.00	0.35	0.22	-0.00
5	30.12		0.72	0.21	-0.00	-0.01	-0.02	-0.02
	4.06	0.97E+06	0.75	0.15	-0.00	-0.01	-0.02	-0.02
	5.00	85.84	0.00	0.00	0.00	0.46	0.24	-0.00
6	30.12		0.83	0.24	-0.00	-0.01	-0.02	-0.02
	6.04	0.97E+06	0.85	0.15	-0.00	-0.01	-0.02	-0.02
	5.00	87.80	0.00	0.00	0.00	0.56	0.26	-0.03
7	30.00		0.98	0.28	-0.05	-0.01	-0.02	-0.01
	8.03	0.97E+06	0.98	0.14	-0.05	-0.01	-0.03	-0.01
	5.00	88.00	0.00	0.00	0.00	0.00	0.30	-0.02
8	30.00		1.08	0.33	-0.04	-0.01	-0.02	-0.01
	10.01	0.97E+06	1.14	0.13	-0.04	-0.01	-0.03	-0.01
	5.00	87.88	0.00	0.00	0.00	0.81	0.34	-0.01
9	29.88		1.20	0.38	-0.01	-0.02	-0.02	-0.02
	12.10	0.97E+06	1.25	0.13	-0.01	-0.01	-0.02	-0.02
	5.00	87.48	0.00	0.00	0.00	0.92	0.38	0.02
10	30.12		1.31	0.48	-0.02	-0.02	-0.02	-0.02
	14.07	0.97E+06	1.30	0.12	-0.02	-0.01	-0.02	-0.02
	5.00	87.50	0.00	0.00	0.00	1.03	0.44	0.02
11	29.80		1.42	0.53	-0.02	-0.02	-0.02	0.00
	16.07	0.98E+06	1.51	0.12	-0.02	-0.01	-0.03	0.00
	5.00	88.21	0.00	0.00	0.00	1.14	0.51	0.01
12	29.80		1.49	0.62	-0.04	-0.02	-0.02	0.01
	18.04	0.97E+06	1.61	0.13	-0.04	-0.01	-0.03	0.01
	5.00	87.63	0.00	0.00	0.00	1.21	0.58	-0.01
13	30.00		1.60	0.72	-0.06	-0.01	-0.02	-0.02
	20.04	0.97E+06	1.75	0.13	-0.06	0.00	-0.02	-0.02
	5.00	87.83	0.00	0.00	0.00	1.32	0.68	-0.05
14	29.80		1.67	0.82	-0.08	-0.01	-0.03	-0.01
	22.03	0.98E+06	1.85	0.13	-0.08	0.00	-0.03	-0.01
	5.00	84.85	0.00	0.00	0.00	1.38	0.77	-0.04

PROPULSIVE WING FORCE DATA

SUMMARY, RUN 207

PT	Q ALPHA BETA	REY NO WEIGHT	CL15 CNF16 CNUC	CD15 CAF16 CNWW	CPR15 CPR16 CNUT	CBR15 CBR16 CLTR	CYR15 CYR16 CDTR	CSF15 CSF16 CNTR
1	21.27		1.47	0.05	-0.23	-0.02	-0.02	-0.04
	-2.03	0.02E+06	1.47	0.10	-0.23	-0.02	-0.02	-0.04
	5.00	88.37	0.00	0.00	0.00	1.08	0.14	-0.20
2	21.27		1.52	0.00	-0.27	-0.02	-0.02	-0.04
	0.05	0.02E+06	1.52	0.00	-0.27	-0.02	-0.02	-0.04
	5.00	88.29	0.22	0.46	0.68	0.24	0.30	-0.23
3	21.04		1.71	0.17	-0.30	-0.02	-0.01	-0.06
	2.06	0.01E+06	1.72	0.10	-0.30	-0.02	-0.01	-0.06
	5.00	88.70	0.22	0.46	0.70	0.50	0.43	-0.26
4	21.15		1.86	0.25	-0.29	-0.01	-0.02	-0.06
	4.07	0.01E+06	1.87	0.12	-0.29	-0.01	-0.02	-0.05
	5.00	87.12	0.22	0.47	0.70	0.05	0.47	-0.25
5	21.04		1.99	0.33	-0.25	0.00	-0.02	-0.07
	6.04	0.01E+06	2.01	0.12	-0.25	0.00	-0.02	-0.07
	5.00	87.56	0.22	0.47	0.70	0.77	0.51	-0.22
6	20.12		2.25	0.46	-0.23	0.00	-0.02	-0.08
	8.04	0.01E+06	2.30	0.14	-0.23	0.01	-0.02	-0.08
	5.00	87.26	0.22	0.47	0.68	1.02	0.58	-0.20
7	21.15		2.48	0.60	-0.37	0.01	-0.02	-0.07
	10.11	0.01E+06	2.55	0.15	-0.37	0.01	-0.02	-0.07
	5.00	87.51	0.22	0.47	0.68	1.26	0.68	-0.23
8	21.04		2.72	0.74	-0.41	0.00	-0.02	-0.08
	12.05	0.01E+06	2.81	0.16	-0.41	0.00	-0.02	-0.08
	5.00	88.34	0.22	0.47	0.70	1.48	0.78	-0.27
9	21.15		2.88	0.91	-0.37	-0.01	-0.02	-0.04
	14.04	0.01E+06	3.01	0.16	-0.37	-0.01	-0.03	-0.04
	5.00	88.64	0.22	0.47	0.68	1.66	0.91	-0.23
10	20.81		3.13	1.08	-0.42	-0.01	-0.02	-0.04
	16.08	0.01E+06	3.21	0.18	-0.42	0.00	-0.03	-0.04
	5.00	87.58	0.22	0.48	0.70	1.87	1.05	-0.30
11	21.15		3.18	1.22	-0.35	-0.01	-0.03	-0.03
	18.06	0.01E+06	3.40	0.17	-0.35	0.00	-0.03	-0.03
	5.00	87.85	0.22	0.47	0.70	1.94	1.14	-0.31
12	21.15		3.31	1.36	-0.34	0.00	-0.03	-0.03
	20.05	0.01E+06	3.50	0.16	-0.34	0.01	-0.03	-0.03
	5.00	88.33	0.22	0.47	0.68	2.07	1.28	-0.30
13	21.15		3.37	1.54	-0.27	0.01	-0.05	-0.01
	22.10	0.01E+06	3.70	0.16	-0.27	0.03	-0.04	-0.01
	5.00	83.28	0.22	0.47	0.68	2.15	1.37	-0.23

PROPULSIVE WING FORCE DATA

SUMMARY, RUN 200

PT	Q ALPHA BETA	REY NO HEIGHT	CL15 CAF16 CNUC	CD15 CAF16 CNUU	CPM15 CPM16 CMUT	CBM15 CBM16 CLTR	CYM15 CYM16 CDTR	CSF15 CSF16 CNTR
1	10.50 -2.00 5.00	0.50E+06 88.74	1.07 1.08 0.45	-0.74 -0.16 0.08	-0.47 -0.47 1.00	-0.04 -0.04 -0.42	-0.02 -0.02 0.47	-0.03 -0.03 -0.30
2	10.48 -0.02 5.00	0.57E+06 88.06	2.13 2.13 0.45	-0.17 -0.17 0.07	-0.48 -0.48 1.42	-0.04 -0.04 -0.32	-0.02 -0.02 0.46	-0.02 -0.02 -0.40
3	10.81 2.04 5.00	0.50E+06 87.13	2.20 2.25 0.44	-0.06 -0.15 0.04	-0.45 -0.45 1.38	-0.06 -0.06 -0.14	-0.02 -0.02 0.46	-0.03 -0.03 -0.37
4	10.81 4.02 5.00	0.50E+06 87.53	2.34 2.34 0.44	0.02 -0.14 0.04	-0.37 -0.37 1.38	-0.04 -0.04 -0.07	-0.01 -0.01 0.46	-0.04 -0.04 -0.29
5	10.80 6.07 5.00	0.50E+06 88.73	2.50 2.50 0.43	0.15 -0.12 0.03	-0.44 -0.44 1.36	-0.04 -0.03 0.15	-0.01 -0.02 0.51	-0.05 -0.06 -0.37
6	10.80 8.04 5.00	0.50E+06 87.25	2.72 2.73 0.44	0.20 -0.11 0.04	-0.20 -0.20 1.38	-0.03 -0.03 0.20	-0.01 -0.01 0.50	-0.06 -0.06 -0.32
7	10.48 10.01 5.00	0.57E+06 88.28	2.90 2.92 0.45	0.44 -0.00 0.07	-0.41 -0.41 1.41	-0.02 -0.02 0.48	-0.01 -0.02 0.52	-0.06 -0.06 -0.33
8	10.25 11.99 5.00	0.57E+06 87.71	3.20 3.24 0.45	0.61 -0.06 0.08	-0.50 -0.50 1.43	-0.02 -0.01 0.74	-0.03 -0.03 0.72	-0.06 -0.06 -0.42
9	10.50 14.02 5.00	0.50E+06 88.17	3.47 3.57 0.44	0.81 -0.06 0.05	-0.50 -0.50 1.30	-0.02 -0.01 0.07	-0.02 -0.03 0.82	-0.07 -0.07 -0.42
10	10.48 16.03 5.00	0.57E+06 87.26	3.70 3.83 0.45	1.00 -0.06 0.07	-0.53 -0.53 1.41	-0.04 -0.03 1.17	-0.03 -0.04 0.93	-0.05 -0.05 -0.46
11	10.50 18.03 5.00	0.50E+06 87.43	3.83 4.02 0.44	1.20 -0.05 0.06	-0.48 -0.48 1.41	-0.04 -0.03 1.34	-0.02 -0.03 1.04	-0.06 -0.05 -0.41
12	10.48 20.05 5.00	0.57E+06 88.20	4.00 4.20 0.45	1.40 -0.07 0.07	-0.48 -0.48 1.42	-0.03 -0.01 1.50	-0.03 -0.04 1.15	-0.05 -0.05 -0.41
13	10.23 22.04 5.00	0.57E+06 90.26	4.22 4.51 0.46	1.60 -0.06 0.09	-0.47 -0.47 1.45	0.00 0.01 1.65	-0.03 -0.03 1.26	-0.07 -0.07 -0.30

PROPULSIVE WING FORCE DATA

SUMMARY, RUN 200

PT	Q ALPHA BETA	REY NO HEIGHT	CL15 CAF16 CNUC	CD15 CAF16 CNUU	CPM15 CPM16 CMUT	CBM15 CBM16 CLTR	CYM15 CYM16 CDTR	CSF15 CSF16 CNTR
1	5.20 -2.06 5.00	0.41E+06 87.17	2.01 2.04 0.00	-0.00 -0.70 1.02	-0.00 -0.00 2.01	-0.06 -0.06 -1.00	-0.03 -0.03 0.61	-0.01 -0.01 -0.72
2	5.17 0.00 5.00	0.40E+06 87.81	3.04 3.04 0.00	-0.70 -0.70 1.07	-0.73 -0.73 2.07	-0.06 -0.06 -1.04	-0.03 -0.03 0.52	-0.02 -0.02 -0.90
3	5.20 2.03 5.00	0.41E+06 87.24	3.21 3.10 0.00	-0.01 -0.72 1.01	-0.70 -0.70 2.70	-0.06 -0.06 -1.70	-0.02 -0.02 0.47	-0.04 -0.04 -0.01
4	5.20 4.07 5.00	0.41E+06 87.00	3.27 3.23 0.00	-0.52 -0.75 1.04	-0.02 -0.02 2.03	-0.07 -0.06 -1.00	-0.00 -0.03 0.30	-0.03 -0.03 -0.46
5	5.40 6.02 5.00	0.41E+06 87.70	3.40 3.41 0.07	-0.30 -0.72 1.01	-0.07 -0.07 2.70	-0.07 -0.07 -1.44	-0.01 -0.00 0.37	-0.03 -0.03 -0.52
6	5.20 8.00 5.00	0.41E+06 87.50	3.00 3.02 0.00	-0.21 -0.72 1.06	-0.03 -0.03 2.00	-0.00 -0.00 -1.35	-0.00 -0.03 0.30	-0.01 -0.01 -0.47
7	5.20 10.00 5.00	0.41E+06 88.52	4.00 4.00 0.00	0.01 -0.00 1.05	-0.70 -0.70 2.04	-0.00 -0.00 -1.00	0.00 -0.01 0.40	-0.00 -0.00 -0.53
8	5.00 12.00 5.00	0.41E+06 87.05	4.11 4.00 0.03	0.20 -0.50 1.01	-0.74 -0.74 2.04	-0.00 -0.00 -0.00	-0.02 -0.03 0.05	-0.00 -0.00 -0.00
9	5.00 14.02 5.00	0.41E+06 88.40	4.37 4.35 0.05	0.47 -0.00 1.00	-0.03 -0.03 2.70	-0.05 -0.04 -0.47	0.00 -0.01 0.40	-0.12 -0.12 -0.00
10	5.17 16.03 5.00	0.41E+06 87.22	4.71 4.72 0.00	0.00 -0.03 1.04	-0.07 -0.07 2.03	-0.04 -0.04 -0.30	-0.00 -0.04 0.54	-0.00 -0.00 -0.72
11	5.00 18.00 5.00	0.41E+06 87.20	4.72 4.77 0.05	0.93 -0.50 1.00	-0.74 -0.74 2.71	-0.02 -0.02 -0.15	-0.01 -0.00 0.61	-0.12 -0.12 -0.50
12	5.00 20.10 5.00	0.41E+06 91.00	4.81 4.81 0.05	1.14 -0.50 1.05	-0.00 -0.00 2.70	-0.03 -0.03 -0.03	-0.01 -0.02 0.05	-0.12 -0.12 -0.53
13	5.17 22.13 5.00	0.41E+06 90.39	5.20 5.44 0.00	1.40 -0.04 1.04	-0.02 -0.02 2.03	-0.05 -0.04 0.24	-0.02 -0.04 0.77	-0.00 -0.00 -0.00

PROPULSIVE WING FORCE DATA

SUMMARY, RUN 210

PT	Q ALPHA BETA	REY NO HEIGHT	CL15 CSF15 CNUC	CD15 CAF15 CNUU	CPM15 CPM15 CNUT	CBM15 CBM15 CLTR	CYM15 CYM15 CNTR	CSF15 CSF15 CNTR
4	30.12		0.00	0.13	-0.12	0.00	0.00	-0.01
	-2.00	0.97E+06	0.38	0.15	-0.12	0.00	0.00	-0.01
	0.00	70.85	0.00	0.00	0.00	0.13	0.20	-0.00
5	30.00		0.51	0.15	-0.11	0.00	0.00	0.00
	0.00	0.97E+06	0.51	0.15	-0.11	0.00	0.00	0.00
	0.00	86.71	0.00	0.00	0.00	0.23	0.21	-0.00
6	29.88		0.81	0.18	-0.08	0.00	0.00	0.00
	2.00	0.97E+06	0.81	0.15	-0.08	0.00	0.00	0.00
	0.00	88.82	0.00	0.00	0.00	0.33	0.22	-0.06
7	29.88		0.71	0.20	-0.08	0.00	0.00	-0.01
	4.01	0.97E+06	0.72	0.15	-0.08	0.00	0.00	-0.01
	0.00	87.56	0.00	0.00	0.00	0.43	0.23	-0.04
8	29.88		0.84	0.23	-0.07	0.00	0.00	0.00
	5.01	0.97E+06	0.86	0.15	-0.07	0.00	0.00	0.00
	0.00	88.24	0.00	0.00	0.00	0.56	0.26	-0.03
9	29.88		0.84	0.27	-0.03	0.00	0.00	-0.01
	7.00	0.97E+06	0.88	0.14	-0.03	0.00	0.00	-0.01
	0.00	87.85	0.00	0.00	0.00	0.86	0.29	0.00
10	30.12		1.06	0.33	-0.02	0.00	0.00	-0.01
	9.00	0.97E+06	1.10	0.13	-0.02	0.00	0.00	-0.01
	0.00	87.11	0.00	0.00	0.00	0.79	0.33	0.01
11	29.88		1.20	0.38	-0.02	0.00	0.00	-0.01
	11.00	0.97E+06	1.25	0.13	-0.02	0.00	0.00	-0.01
	-0.01	87.06	0.00	0.00	0.00	0.82	0.38	0.01
12	30.00		1.31	0.45	-0.02	0.00	0.00	-0.01
	13.98	0.97E+06	1.37	0.12	-0.02	0.00	0.00	-0.01
	0.00	86.95	0.00	0.00	0.00	1.02	0.43	0.02
13	29.77		1.40	0.52	-0.01	0.00	0.00	0.00
	16.00	0.97E+06	1.40	0.12	-0.01	0.00	0.00	0.00
	0.00	86.50	0.00	0.00	0.00	1.12	0.50	0.03
14	30.00		1.50	0.61	-0.04	0.00	0.00	0.00
	18.00	0.97E+06	1.61	0.12	-0.04	0.00	0.00	0.00
	-0.01	86.06	0.00	0.00	0.00	1.22	0.58	0.00
15	29.88		1.58	0.71	-0.08	0.00	0.00	-0.01
	20.00	0.97E+06	1.74	0.12	-0.08	0.00	0.00	-0.01
	-0.01	87.61	0.00	0.00	0.00	1.32	0.67	-0.06
16	29.[illegible]		1.68	0.81	-0.08	0.00	0.00	-0.02
	22.61	0.97E+06	1.86	0.12	-0.08	0.00	0.00	-0.02
	-0.0[illegible]	84.58	0.00	0.00	0.00	1.40	0.76	-0.06

PROPULSIVE WING FORCE DATA

SUMMARY, RUN 211

PT	Q ALPHA BETA	REY NO HEIGHT	CL15 CSF15 CNUC	CD15 CAF15 CNUU	CPM15 CPM15 CNUT	CBM15 CBM15 CLTR	CYM15 CYM15 CNTR	CSF15 CSF15 CNTR
1	21.04		1.44	0.04	-0.20	0.00	0.00	0.01
	-2.01	0.81E+06	1.43	0.00	-0.20	0.00	0.00	0.01
	0.00	78.15	0.22	0.47	0.00	0.26	0.26	-0.25
2	21.04		1.58	0.00	-0.24	0.00	0.00	0.00
	0.32	0.81E+06	1.58	0.00	-0.24	0.00	0.00	0.00
	0.00	84.92	0.22	0.47	0.00	0.32	0.26	-0.21
3	20.92		1.61	0.14	-0.21	0.00	0.00	-0.01
	1.00	0.81E+06	1.61	0.00	-0.21	0.00	0.00	-0.01
	0.00	86.04	0.22	0.47	0.00	0.40	0.40	-0.16
4	21.04		1.64	0.23	-0.30	0.02	0.00	-0.02
	4.01	0.81E+06	1.66	0.10	-0.30	0.02	0.01	-0.02
	0.00	86.17	0.22	0.47	0.00	0.63	0.46	-0.20
5	20.92		1.90	0.30	-0.18	0.03	0.00	-0.03
	6.01	0.81E+06	1.92	0.10	-0.18	0.03	0.01	-0.03
	0.00	85.63	0.22	0.47	0.00	0.67	0.47	-0.14
6	20.92		2.19	0.43	-0.20	0.04	0.00	-0.03
	8.00	0.81E+06	2.23	0.12	-0.20	0.04	0.00	-0.03
	-0.01	85.02	0.22	0.47	0.00	0.96	0.56	-0.24
7	20.92		2.46	0.58	-0.26	0.03	0.00	-0.01
	9.00	0.81E+06	2.54	0.14	-0.26	0.03	0.00	-0.01
	-0.01	85.37	0.22	0.47	0.00	1.24	0.67	-0.22
8	21.04		2.73	0.75	-0.40	0.01	0.00	-0.01
	12.01	0.81E+06	2.83	0.15	-0.40	0.01	0.00	-0.01
	-0.01	82.00	0.22	0.47	0.00	1.50	0.80	-0.36
9	20.92		2.95	0.91	-0.42	0.01	0.00	-0.02
	14.02	0.81E+06	3.08	0.17	-0.42	0.01	0.01	-0.02
	0.00	84.34	0.22	0.46	0.00	1.72	0.92	-0.36
10	21.04		3.05	1.06	-0.37	0.01	0.00	-0.01
	16.00	0.81E+06	3.23	0.17	-0.37	0.01	0.00	-0.01
	-0.01	85.12	0.21	0.46	0.07	1.83	1.02	-0.33
11	20.81		3.15	1.18	-0.31	0.02	0.00	-0.04
	18.00	0.81E+06	3.36	0.18	-0.31	0.02	0.01	-0.04
	-0.01	85.27	0.21	0.46	0.07	1.91	1.11	-0.27
12	20.81		3.29	1.35	-0.30	0.02	0.00	-0.03
	20.00	0.81E+06	3.55	0.15	-0.30	0.02	0.01	-0.03
	-0.01	85.29	0.22	0.46	0.08	2.06	1.23	-0.27
13	21.04		3.37	1.54	-0.30	0.02	0.00	-0.02
	21.00	0.81E+06	3.08	0.13	-0.30	0.02	0.00	-0.02
	-0.01	83.20	0.21	0.46	0.07	2.15	1.34	-0.20

PROPULSIVE WING FORCE DATA

SUMMARY, RUN 212

PT	Q ALPHA BETA	RET NO HEIGHT	CL15 CDF15 CDUC	CD15 CDF15 CDUN	CPM15 CPM15 CMUT	CRM15 CRM15 CLTR	CYM15 CYM15 CDTR	CDF15 CDF15 CNTR
1	10.46 -2.00 0.00	0.50E+06 53.07	1.95 1.96 0.42	-0.05 -0.19 0.02	-0.46 -0.46 1.36	0.00 0.00 -0.45	0.01 0.01 0.45	-0.01 -0.01 -0.36
2	10.46 -0.01 0.00	0.50E+06 50.54	2.10 2.10 0.42	-0.15 -0.15 0.03	-0.45 -0.45 1.35	0.00 0.00 -0.32	0.00 0.00 0.44	0.01 0.01 -0.36
3	10.46 1.98 0.00	0.50E+06 50.46	2.23 2.23 0.42	-0.10 -0.15 0.02	-0.42 -0.42 1.34	0.00 0.00 -0.21	0.01 0.01 0.43	-0.02 -0.02 -0.35
4	10.50 4.00 0.00	0.50E+06 57.98	2.33 2.33 0.42	0.00 -0.17 0.01	-0.37 -0.37 1.33	0.00 0.00 -0.10	0.00 0.00 0.44	-0.01 -0.01 -0.29
5	10.50 5.99 -0.01	0.50E+06 60.02	2.50 2.55 0.42	0.12 -0.15 0.02	-0.42 -0.42 1.33	0.02 0.02 0.10	0.01 0.02 0.46	-0.00 -0.00 -0.34
6	10.46 7.99 -0.01	0.50E+06 60.46	2.71 2.72 0.41	0.24 -0.13 0.01	-0.38 -0.38 1.32	0.03 0.03 0.24	0.00 0.01 0.52	-0.05 -0.05 -0.31
7	10.22 9.96 -0.01	0.57E+06 60.44	2.90 3.02 0.42	0.40 -0.13 0.02	-0.43 -0.43 1.34	0.03 0.03 0.47	-0.01 0.00 0.50	-0.04 -0.04 -0.26
8	10.50 12.03 -0.01	0.50E+06 60.02	3.15 3.20 0.41	0.50 -0.11 0.00	-0.43 -0.43 1.31	0.03 0.03 0.70	0.00 0.01 0.06	-0.07 -0.07 -0.30
9	10.46 14.00 0.00	0.50E+06 60.50	3.38 3.46 0.42	0.74 -0.10 0.02	-0.44 -0.44 1.33	0.01 0.01 0.00	0.00 0.00 0.75	-0.03 -0.03 -0.37
10	10.35 16.00 -0.01	0.57E+06 57.07	3.02 3.74 0.42	0.94 -0.10 0.02	-0.47 -0.47 1.34	-0.01 -0.01 1.10	0.01 0.01 0.00	-0.04 -0.04 -0.30
11	10.46 17.98 -0.01	0.50E+06 57.56	3.79 3.95 0.41	1.12 -0.10 0.01	-0.48 -0.48 1.32	-0.02 -0.02 1.31	0.01 0.00 0.00	-0.04 -0.04 -0.40
12	10.46 20.00 -0.01	0.50E+06 60.01	3.93 4.14 0.42	1.22 -0.10 0.02	-0.44 -0.44 1.34	-0.01 -0.01 1.45	0.01 0.01 1.07	-0.05 -0.05 -0.37
13	10.46 22.01 -0.01	0.50E+06 60.14	3.98 4.24 0.42	1.48 -0.12 0.02	-0.34 -0.34 1.34	0.01 0.01 1.51	0.01 0.01 1.14	-0.06 -0.06 -0.26

PROPULSIVE WING FORCE DATA

SUMMARY, RUN 213

PT	Q ALPHA BETA	RET NO HEIGHT	CL15 CDF15 CDUC	CD15 CDF15 CDUN	CPM15 CPM15 CMUT	CRM15 CRM15 CLTR	CYM15 CYM15 CDTR	CDF15 CDF15 CNTR
1	5.20 -1.98 0.00	0.41E+06 46.07	2.03 2.05 0.00	-0.02 -0.73 1.01	-0.01 -0.01 2.00	-0.01 -0.01 -1.00	0.01 0.01 0.56	-0.01 -0.01 -0.56
2	5.20 0.00 0.00	0.41E+06 54.52	2.04 2.09 0.01	-0.72 -0.72 1.79	-0.71 -0.71 2.00	0.01 0.01 -1.06	0.02 0.02 0.48	-0.07 -0.07 -0.54
3	5.20 2.01 0.00	0.41E+06 54.00	3.11 3.00 0.01	-0.01 -0.71 1.70	-0.75 -0.75 2.00	0.02 0.02 -1.00	0.02 0.02 0.43	-0.00 -0.00 -0.51
4	5.20 4.01 0.00	0.41E+06 54.52	3.22 3.16 0.01	-0.50 -0.72 1.06	-0.00 -0.00 2.01	0.02 0.02 -1.02	0.01 0.01 0.37	-0.00 -0.00 -0.51
5	5.20 5.98 0.00	0.41E+06 55.40	3.40 3.30 0.01	-0.35 -0.71 1.00	-0.70 -0.70 2.01	0.00 0.00 -1.43	0.01 0.01 0.35	-0.00 -0.00 -0.35
6	5.20 8.00 -0.01	0.41E+06 55.01	3.56 3.49 0.01	-0.20 -0.70 1.00	-0.00 -0.00 2.01	0.00 0.00 -1.34	0.00 0.00 0.33	-0.00 -0.00 -0.45
7	5.20 9.98 -0.01	0.41E+06 55.95	3.67 3.61 0.02	0.00 -0.68 1.01	-0.72 -0.72 2.02	0.00 0.00 -1.05	0.00 0.00 0.36	-0.00 -0.00 -0.57
8	5.20 12.00 -0.01	0.41E+06 56.68	4.15 4.11 0.01	0.21 -0.65 1.01	-0.75 -0.75 2.02	0.02 0.02 -0.77	0.01 0.02 0.41	-0.10 -0.10 -0.60
9	5.17 13.99 -0.01	0.40E+06 56.21	4.27 4.23 0.04	0.37 -0.57 1.05	-0.80 -0.80 2.00	0.04 0.04 -0.77	0.01 0.02 0.40	-0.12 -0.12 -0.51
10	5.17 16.00 -0.01	0.40E+06 57.26	4.39 4.36 0.04	0.55 -0.50 1.05	-0.90 -0.90 2.00	0.06 0.06 -0.00	0.00 0.02 0.40	-0.15 -0.15 -0.44
11	5.20 18.00 -0.01	0.41E+06 56.02	4.51 4.52 0.02	0.75 -0.07 1.00	-0.90 -0.90 2.02	0.07 0.08 -0.41	-0.02 0.01 0.44	-0.14 -0.14 -0.44
12	5.20 20.01 -0.01	0.41E+06 56.56	4.71 4.77 0.02	1.01 -0.07 1.01	-0.84 -0.84 2.02	0.05 0.06 -0.16	-0.03 -0.02 0.51	-0.00 -0.00 -0.40
13	5.20 21.99 -0.01	0.41E+06 57.77	5.01 5.13 0.02	1.30 -0.07 1.00	-0.74 -0.74 2.02	0.02 0.03 0.12	-0.00 -0.01 0.54	-0.00 -0.00 -0.50

PROPULSIVE WING FORCE DATA

SUMMARY, RUN 214

PT	Q ALPHA BETA	REY NO HEIGHT	CL15 CAF16 CNUC	CD15 CAF16 CNUA	CPM15 CPM16 CMUT	CBM15 CBM16 CLTR	CYM15 CYM16 CDTR	CSF15 CSF16 CNTR
2	30.00		0.41	0.14	-0.12	0.00	0.00	0.01
	-2.00	0.97E+06	3.40	0.15	-0.12	0.00	0.00	0.01
	0.00	78.07	0.00	0.00	0.00	0.14	0.20	-0.00
3	30.00		0.51	0.15	-0.11	0.00	0.00	0.01
	-0.01	0.97E+06	0.51	0.15	-0.11	0.00	0.00	0.01
	0.00	84.71	0.00	0.00	0.00	0.23	0.21	-0.00
4	30.12		0.61	0.16	-0.09	0.00	0.00	0.01
	2.02	0.97E+06	0.61	0.16	-0.09	0.00	0.00	0.01
	0.00	91.81	0.00	0.00	0.00	0.33	0.22	-0.00
5	30.25		0.00	0.18	-0.08	0.00	-0.01	0.01
	2.03	0.97E+06	0.61	0.18	-0.08	0.00	-0.01	0.01
	0.00	91.81	0.00	0.00	0.00	0.33	0.22	-0.05
6	29.88		0.72	0.21	-0.06	0.00	-0.01	0.00
	4.01	0.98E+06	0.73	0.16	-0.06	0.00	-0.01	0.00
	0.00	85.01	0.00	0.00	0.00	0.44	0.24	-0.05
7	30.00		0.84	0.24	-0.07	0.00	-0.01	0.00
	6.01	0.98E+06	0.86	0.15	-0.07	0.00	-0.01	0.00
	0.00	86.55	0.00	0.00	0.00	0.56	0.27	-0.04
8	30.12		0.94	0.26	-0.04	0.00	-0.01	0.00
	8.00	0.97E+06	0.97	0.15	-0.04	0.00	-0.01	0.00
	-0.01	86.31	0.00	0.00	0.00	0.67	0.30	0.00
9	30.12		1.06	0.33	-0.01	0.00	-0.01	0.00
	10.00	0.97E+06	1.10	0.14	-0.01	0.00	-0.01	0.00
	-0.01	87.86	0.00	0.00	0.00	0.78	0.34	0.02
10	30.00		1.18	0.38	-0.01	0.00	-0.01	0.00
	11.99	0.98E+06	1.25	0.13	-0.01	0.00	-0.01	0.00
	-0.01	88.24	0.00	0.00	0.00	0.91	0.38	0.03
11	30.00		1.27	0.45	0.01	0.00	-0.01	0.00
	13.99	0.98E+06	1.34	0.13	0.01	0.00	-0.01	0.00
	-0.01	87.04	0.00	0.00	0.00	0.99	0.44	0.05
12	29.88		1.40	0.54	-0.01	0.00	-0.01	0.00
	15.00	0.98E+06	1.50	0.13	-0.01	0.00	-0.01	0.00
	-0.01	85.00	0.00	0.00	0.00	1.13	0.51	0.03
13	30.12		1.49	0.62	-0.03	0.00	-0.01	0.00
	18.03	0.98E+06	1.61	0.13	-0.03	0.00	-0.01	0.00
	-0.01	88.92	0.00	0.00	0.00	1.21	0.58	0.00
14	30.00		1.58	0.73	-0.06	0.00	-0.01	0.01
	20.01	0.98E+06	1.74	0.14	-0.06	0.00	-0.01	0.01
	-0.01	87.76	0.00	0.00	0.00	1.31	0.68	-0.04
15	29.99		1.88	0.83	-0.08	0.00	-0.01	0.00
	22.02	0.98E+06	1.86	0.14	-0.08	0.00	-0.01	0.00
	-0.01	94.84	0.00	0.00	0.00	1.40	0.72	-0.05

PROPULSIVE WING FORCE DATA

SUMMARY, RUN 215

PT	Q ALPHA BETA	REY NO HEIGHT	CL15 CAF16 CNUC	CD15 CAF16 CNUA	CPM15 CPM16 CMUT	CBM15 CBM16 CLTR	CYM15 CYM16 CDTR	CSF15 CSF16 CNTR
5	0.00		1.50	0.07	-7.23	-0.01	-13.00	1.40
	-0.01	0.30E+06	1.50	0.07	-7.23	-0.01	-13.00	1.40
	0.00	73.01	0.10	0.30	0.50	-103.40	21.14	9.42
6	0.00		50.05	-31.02	-910.50	14.42	-0.31	-0.17
	0.02	0.30E+06	50.04	-31.03	-910.50	14.42	-0.30	-0.17
	0.00	73.01	92.42	40.00	00.10	-121.00	3.07	-910.20
7	0.00		80.30	-40.30	-770.30	26.10	-0.04	0.70
	0.01	0.30E+06	80.26	-40.45	-770.30	26.11	-0.02	0.70
	0.00	73.01	37.13	70.30	115.30	-150.39	4.50	-771.50
8	0.00		114.10	-87.95	-1133.00	20.00	-23.74	1.52
	0.07	0.30E+06	114.00	-87.00	-1133.00	20.00	-23.70	1.52
	0.00	73.01	51.40	100.70	101.20	-101.20	4.40	-1134.00
9	0.00		143.50	-00.41	-1450.00	0.30	-31.00	0.00
	0.00	0.30E+06	143.40	-00.03	-1450.00	0.43	-31.07	0.00
	0.00	73.01	64.00	130.00	203.20	-200.70	0.25	-1444.00

PROPULSIVE WING FORCE DATA

SUMMARY, RUN 216

PT	Q ALPHA BETA	REY NO HEIGHT	CL15 CSF16 CNUC	CD15 CAF16 CNUA	CPM15 CPM16 CNUT	CBM15 CBM16 CLTR	CYM15 CYM16 CDTR	CSF15 CSF16 CNTR
2	29.88		0.40	0.16	0.02	0.00	0.00	0.01
	-1.99	0.98E+06	0.39	0.17	0.02	0.00	0.00	0.01
	0.00	79.00	0.00	0.00	0.00	0.13	0.22	0.05
3	30.12		0.52	0.18	0.03	0.00	0.00	0.01
	0.01	0.98E+06	0.52	0.18	0.03	0.00	0.00	0.01
	0.00	80.29	0.00	0.00	0.00	0.25	0.23	0.06
4	30.12		0.63	0.21	0.05	0.00	0.00	0.01
	2.01	0.98E+06	0.63	0.19	0.05	0.00	0.00	0.01
	0.00	84.03	0.00	0.00	0.00	0.35	0.26	0.06
5	30.12		0.74	0.25	0.05	0.00	0.00	0.01
	4.00	0.98E+06	0.76	0.20	0.05	0.00	0.00	0.01
	0.00	84.02	0.00	0.00	0.00	0.47	0.29	0.00
6	30.00		0.85	0.30	0.05	0.00	0.00	0.01
	6.00	0.98E+06	0.86	0.21	0.05	0.00	0.00	0.01
	0.00	84.37	0.00	0.00	0.00	0.58	0.32	0.08
7	29.88		0.90	0.35	0.04	0.00	0.00	0.01
	8.01	0.98E+06	1.03	0.21	0.04	0.00	0.00	0.01
	0.00	83.93	0.00	0.00	0.00	0.71	0.37	0.07
8	30.00		1.00	0.40	-0.02	0.00	0.00	0.00
	10.04	0.98E+06	1.14	0.21	-0.02	0.00	0.00	0.00
	-0.01	82.95	0.00	0.00	0.00	0.81	0.41	0.01
9	30.35		1.19	0.45	-0.05	0.01	0.00	0.01
	12.00	0.97E+06	1.26	0.20	-0.05	0.00	0.00	0.01
	-0.01	84.02	0.00	0.00	0.00	0.91	0.45	-0.01
10	30.00		1.26	0.52	-0.03	0.01	0.00	0.01
	14.00	0.98E+06	1.37	0.19	-0.03	0.01	0.00	0.01
	-0.01	86.12	0.00	0.00	0.00	1.01	0.51	0.00
11	29.89		1.40	0.60	-0.04	0.01	0.00	0.01
	16.01	0.98E+06	1.51	0.19	-0.04	0.01	0.00	0.01
	-0.01	86.52	0.00	0.00	0.00	1.12	0.58	0.00
12	30.00		1.48	0.80	-0.04	0.01	0.00	0.01
	18.00	0.98E+06	1.64	0.20	-0.04	0.00	0.00	0.01
	-0.01	82.70	0.00	0.00	0.00	1.22	0.66	-0.01
13	29.77		1.59	0.79	-0.05	0.00	0.00	0.01
	19.99	0.98E+06	1.77	0.20	-0.05	0.00	0.00	0.01
	-0.01	87.95	0.00	0.00	0.00	1.31	0.75	-0.01
14	30.12		1.85	0.86	-0.05	0.01	0.00	0.01
	22.03	0.98E+06	1.86	0.20	-0.05	0.01	0.00	0.01
	-0.01	94.42	0.00	0.00	0.00	1.38	0.83	-0.02

PROPULSIVE WING FORCE DATA

SUMMARY, RUN 217

PT	Q ALPHA BETA	REY NO HEIGHT	CL15 CSF16 CNUC	CD15 CAF16 CNUA	CPM15 CPM16 CNUT	CBM15 CBM16 CLTR	CYM15 CYM16 CDTR	CSF15 CSF16 CNTR
1	21.15		1.29	0.08	-0.13	0.01	0.00	0.02
	-1.99	0.81E+06	1.28	0.14	-0.13	0.01	0.00	0.02
	0.00	83.52	0.21	0.45	0.07	0.03	0.20	-0.11
2	21.04		1.36	0.13	-0.07	0.00	0.00	0.02
	0.01	0.81E+06	1.36	0.13	-0.07	0.00	0.00	0.02
	0.00	80.25	0.21	0.46	0.07	0.06	0.41	-0.05
3	21.04		1.43	0.17	-0.06	0.01	0.01	0.02
	1.00	0.81E+06	1.43	0.12	-0.06	0.01	0.01	0.02
	0.00	80.06	0.21	0.46	0.07	0.96	0.43	-0.03
4	21.04		1.51	0.21	0.01	0.03	0.01	0.01
	3.00	0.81E+06	1.52	0.11	0.01	0.03	0.01	0.01
	0.00	80.13	0.21	0.46	0.07	1.02	0.46	0.03
5	20.92		1.61	0.29	0.04	0.02	0.02	-0.02
	5.00	0.81E+06	1.64	0.12	0.04	0.02	0.02	-0.02
	0.00	80.74	0.21	0.46	0.07	1.11	0.52	0.06
6	21.15		1.75	0.38	0.06	0.02	0.01	0.01
	6.02	0.81E+06	1.78	0.14	0.06	0.02	0.02	0.01
	0.00	80.20	0.21	0.45	0.06	1.25	0.58	0.07
7	21.04		1.94	0.50	0.04	0.01	0.01	0.01
	8.99	0.81E+06	2.00	0.16	0.04	0.00	0.01	0.01
	-0.01	80.02	0.21	0.45	0.06	1.43	0.00	0.06
8	20.92		2.18	0.66	0.01	0.01	0.02	-0.01
	12.00	0.81E+06	2.26	0.18	0.01	0.01	0.02	-0.01
	-0.01	84.70	0.21	0.45	0.07	1.86	0.83	0.03
9	21.15		2.41	0.82	-0.02	0.01	0.01	0.00
	13.98	0.81E+06	2.53	0.21	-0.02	0.01	0.01	0.00
	-0.01	83.32	0.21	0.45	0.06	1.86	0.97	-0.01
10	20.92		2.64	1.00	-0.04	0.01	0.02	-0.01
	16.01	0.81E+06	2.81	0.24	-0.04	0.01	0.02	-0.01
	-0.01	80.53	0.21	0.46	0.07	2.10	1.14	-0.02
11	20.92		2.75	1.14	-0.01	0.02	0.01	-0.02
	17.98	0.81E+06	2.97	0.23	-0.01	0.02	0.02	-0.02
	-0.01	80.06	0.21	0.46	0.07	2.21	1.20	0.01
12	21.04		2.85	1.28	0.00	0.03	0.01	-0.02
	20.03	0.81E+06	3.12	0.23	0.00	0.03	0.02	-0.02
	-0.01	85.48	0.21	0.46	0.07	2.31	1.36	0.02
13	21.15		2.89	1.36	0.07	0.03	0.02	-0.03
	22.03	0.81E+06	3.16	0.22	0.07	0.02	0.03	-0.03
	-0.01	92.07	0.21	0.45	0.06	2.30	1.47	0.06

PROPULSIVE WING FORCE DATA

SUMMARY, RUN 218

PT	Q ALPHA BETA	REY NO HEIGHT	CL1S CNF1B CNUC	CD1S CAF1B CNUH	CPM1S CPM1B CNUT	CBM1S CBM1B CLTR	CYM1S CYM1B CDTR	CSF1S CSF1B CNTR
3	10.48		2.08	-0.07	-0.30	0.00	0.00	0.04
	-2.01	0.57E+06	2.08	0.01	-0.30	0.00	0.00	0.04
	0.00	78.63	0.43	0.01	1.34	1.18	0.51	-0.27
4	10.48		2.14	-0.03	-0.24	0.00	-0.01	0.02
	0.01	0.57E+06	2.14	-0.03	-0.24	0.00	-0.01	0.02
	6.00	85.70	0.44	0.04	1.37	1.18	0.53	-0.20
5	10.35		2.27	0.04	-0.23	0.00	0.00	0.03
	2.01	0.57E+06	2.27	-0.04	-0.23	0.00	0.00	0.03
	0.00	84.71	0.44	0.05	1.38	1.28	0.57	-0.18
6	10.48		2.38	0.11	-0.20	0.00	0.00	0.01
	4.01	0.57E+06	2.36	-0.06	-0.20	0.00	0.00	0.01
	0.00	85.20	0.43	0.04	1.37	1.36	0.61	-0.17
7	10.35		2.45	0.20	-0.15	0.01	0.00	0.03
	6.00	0.57E+06	2.45	-0.06	-0.15	0.01	0.00	0.03
	0.00	85.38	0.44	0.05	1.38	1.43	0.67	-0.11
8	10.58		2.55	0.31	-0.12	0.03	-0.01	0.02
	8.00	0.58E+06	2.57	-0.05	-0.12	0.03	-0.01	0.02
	0.00	85.04	0.42	0.02	1.35	1.53	0.73	-0.08
9	10.58		2.72	0.45	-0.14	0.05	0.00	-0.03
	10.00	0.58E+06	2.76	-0.03	-0.14	0.05	0.01	-0.03
	0.00	84.73	0.42	0.01	1.33	1.70	0.83	-0.11
10	10.48		2.90	0.60	-0.12	0.03	0.00	0.01
	11.50	0.57E+06	2.95	-0.02	-0.12	0.03	0.00	0.01
	-0.01	84.33	0.42	0.01	1.33	1.85	0.94	-0.08
11	10.48		3.29	0.78	-0.28	0.03	0.00	-0.01
	14.00	0.57E+06	3.30	-0.01	-0.28	0.03	0.00	-0.01
	-0.01	83.18	0.42	0.02	1.34	2.14	1.11	-0.24
12	10.48		3.24	0.92	-0.15	0.00	-0.01	0.03
	16.00	0.57E+06	3.36	-0.01	-0.15	0.00	-0.01	0.03
	0.00	84.77	0.42	0.02	1.34	2.16	1.20	-0.11
13	10.48		3.30	1.07	-0.07	-0.01	0.01	0.02
	18.01	0.57E+06	3.47	0.00	-0.07	-0.01	0.00	0.02
	-0.01	85.48	0.42	0.02	1.34	2.22	1.31	-0.04
14	10.48		3.55	1.20	-0.11	0.00	0.01	-0.01
	19.99	0.57E+06	3.78	0.01	-0.11	0.00	0.01	-0.01
	-0.01	88.78	0.42	0.02	1.34	2.43	1.48	-0.08
15	10.48		3.71	1.51	-0.08	0.01	0.01	-0.03
	22.01	0.57E+06	4.00	0.01	-0.08	0.01	0.01	-0.03
	-0.01	95.88	0.42	0.02	1.34	2.61	1.87	-0.04
16	10.58		3.80	1.47	-0.05	0.01	0.00	-0.02
	22.00	0.58E+06	3.89	0.02	-0.05	0.01	0.01	-0.02
	-0.01	95.81	0.41	0.00	1.32	2.51	1.83	-0.02

PROPULSIVE WING FORCE DATA

SUMMARY, RUN 219

PT	Q ALPHA BETA	REY NO HEIGHT	CL1S CNF1B CNUC	CD1S CAF1B CNUH	CPM1S CPM1B CNUT	CBM1S CBM1B CLTR	CYM1S CYM1B CDTR	CSF1S CSF1B CNTR
1	5.20		3.22	-0.56	-0.07	0.02	0.01	0.04
	-2.01	0.41E+06	3.24	-0.48	-0.07	0.02	0.01	0.04
	0.00	81.86	0.82	1.81	2.63	1.28	0.61	-0.50
2	5.17		3.35	-0.50	-0.02	0.01	0.02	0.02
	0.00	0.40E+06	3.35	-0.50	-0.02	0.01	0.02	0.02
	0.00	80.06	0.84	1.85	2.68	1.41	0.64	-0.55
3	5.17		3.30	-0.42	-0.52	0.01	0.01	0.01
	2.03	0.40E+06	3.28	-0.53	-0.52	0.01	0.01	0.01
	0.00	87.40	0.84	1.85	2.00	1.31	0.68	-0.44
4	5.20		3.34	-0.30	-0.48	0.02	0.00	-0.01
	4.00	0.41E+06	3.31	-0.54	-0.48	0.02	0.01	-0.01
	0.00	87.18	0.82	1.81	2.63	1.37	0.68	-0.40
5	5.20		3.42	-0.18	-0.44	0.01	0.01	-0.02
	5.99	0.41E+06	3.20	-0.53	-0.44	0.01	0.01	-0.02
	0.00	87.68	0.82	1.82	2.64	1.42	0.74	-0.37
6	5.17		3.72	0.01	-0.50	0.02	0.01	-0.02
	7.00	0.40E+06	3.68	-0.53	-0.50	0.02	0.01	-0.02
	0.00	88.02	0.84	1.86	2.71	1.63	0.86	-0.43
7	5.20		3.74	0.14	-0.44	0.01	0.01	-0.02
	10.00	0.41E+06	3.70	-0.51	-0.44	0.01	0.01	-0.02
	-0.01	87.18	0.82	1.82	2.64	1.88	0.91	-0.36
8	5.20		3.83	0.32	-0.52	0.01	0.00	-0.04
	12.00	0.41E+06	3.81	-0.50	-0.52	0.01	0.01	-0.04
	-0.01	87.53	0.82	1.82	2.64	1.83	1.03	-0.44
9	5.20		4.10	0.51	-0.51	0.04	0.00	-0.07
	13.99	0.41E+06	4.10	-0.50	-0.51	0.04	0.01	-0.07
	-0.01	88.88	0.83	1.82	2.65	1.97	1.14	-0.44
10	5.17		4.26	0.70	-0.42	0.05	0.01	-0.08
	16.02	0.40E+06	4.28	-0.50	-0.42	0.05	0.02	-0.08
	-0.01	88.96	0.84	1.86	2.70	2.08	1.27	-0.34
11	5.20		3.98	0.78	-0.11	0.03	-0.01	0.00
	18.01	0.41E+06	4.03	-0.46	-0.11	0.03	0.00	0.00
	-0.01	88.33	0.81	1.81	2.62	1.83	1.27	-0.04
12	5.20		4.49	1.14	-0.49	0.02	0.01	-0.04
	20.00	0.41E+06	4.60	-0.47	-0.49	0.02	0.01	-0.04
	-0.01	90.46	0.81	1.78	2.60	2.34	1.54	-0.42
13	5.20		4.85	1.30	-0.50	0.03	0.01	-0.03
	22.00	0.41E+06	4.83	-0.45	-0.50	0.02	0.02	-0.03
	-0.01	87.70	0.81	1.78	2.59	2.51	1.71	-0.43

PROPULSIVE WING FORCE DATA

SUMMARY, RUN 220

PT	Q ALPHA BETA	REY NO HEIGHT	CLIS CNFIB CNUC	CDIS CAFIB CNUW	CPMIS CPMIB CMUT	CMMIS CMMIB CLTR	CYMIS CYMIB CDTR	CSFIS CSFIB CNTR
2	0.00		-1.50	-0.13	12.80	-0.44	12.02	-1.40
	-0.04	0.30E+06	-1.50	-0.13	12.80	-0.43	12.02	-1.40
	-0.39	87.07	0.33	0.00	0.33	-23.47	16.11	12.72
3	0.00		21.10	-16.98	468.20	23.60	28.80	-1.32
	0.06	0.30E+06	21.09	-17.00	468.20	23.57	28.81	-1.32
	-0.39	87.07	37.57	0.00	37.57	-58.13	30.80	468.40
4	0.00		33.92	-24.56	809.40	33.20	29.03	-1.06
	0.11	0.30E+06	32.87	-24.82	809.40	33.14	29.09	-1.06
	-0.39	87.07	55.86	0.00	55.86	-35.37	44.86	703.70
5	0.00		35.34	-28.24	757.50	28.51	28.32	-1.01
	0.13	0.30E+06	35.28	-28.32	757.50	28.45	28.38	-1.01
	-0.39	87.07	125.00	0.00	125.00	-81.76	48.31	762.40

PROPULSIVE WING FORCE DATA

SUMMARY, RUN 221

PT	Q ALPHA BETA	REY NO HEIGHT	CLIS CNFIB CNUC	CDIS CAFIB CNUW	CPMIS CPMIB CMUT	CMMIS CMMIB CLTR	CYMIS CYMIB CDTR	CSFIS CSFIB CNTR
2	30.35		0.13	0.04	0.10	0.00	0.00	0.01
	-2.05	0.97E+06	0.13	0.04	0.10	0.00	0.00	0.01
	-0.01	87.18	0.00	0.00	0.00	0.14	0.04	0.10
3	30.48		0.17	0.05	0.14	0.00	0.00	0.01
	-0.05	0.97E+06	0.17	0.05	0.14	0.00	0.00	0.01
	-0.01	87.82	0.00	0.00	0.00	0.17	0.05	0.14
4	30.35		0.20	0.05	0.18	0.00	0.00	0.01
	2.05	0.97E+06	0.20	0.04	0.18	0.00	0.00	0.01
	-0.01	87.17	0.00	0.00	0.00	0.21	0.05	0.18
5	30.35		0.25	0.06	0.21	0.00	0.00	0.01
	4.06	0.972+06	0.25	0.04	0.21	0.00	0.00	0.01
	-0.01	87.16	0.00	0.00	0.00	0.25	0.06	0.21
6	30.35		0.28	0.07	0.25	0.00	0.00	0.00
	6.06	0.97E+06	0.28	0.04	0.25	0.00	0.00	0.00
	-0.01	87.20	0.00	0.00	0.00	0.28	0.07	0.25
7	30.23		0.35	0.08	0.29	0.00	0.00	0.01
	8.03	0.97E+06	0.34	0.03	0.29	0.00	0.00	0.01
	-0.01	87.48	0.00	0.00	0.00	0.33	0.08	0.29
8	30.23		0.37	0.10	0.33	0.00	0.00	0.01
	10.04	0.97E+06	0.38	0.03	0.33	0.00	0.00	0.01
	-0.01	88.18	0.00	0.00	0.00	0.37	0.10	0.33
9	30.35		0.40	0.12	0.37	0.00	0.00	0.01
	12.02	0.97E+06	0.42	0.03	0.37	0.00	0.00	0.01
	-0.01	88.02	0.00	0.00	0.00	0.41	0.12	0.37
10	30.12		0.44	0.14	0.40	0.00	0.00	0.00
	14.03	0.97E+06	0.46	0.03	0.40	0.00	0.00	0.00
	-0.01	87.15	0.00	0.00	0.00	0.44	0.14	0.40
11	30.00		0.45	0.16	0.42	0.00	0.00	0.00
	16.02	0.97E+06	0.48	0.03	0.42	0.00	0.00	0.00
	-0.01	88.46	0.00	0.00	0.00	0.45	0.16	0.42
12	30.12		0.43	0.18	0.40	0.00	0.00	0.00
	18.00	0.97E+06	0.46	0.04	0.40	0.00	0.00	0.00
	-0.01	87.50	0.00	0.00	0.00	0.43	0.18	0.40
13	30.12		0.44	0.20	0.40	0.00	0.00	0.01
	20.03	0.97E+06	0.48	0.04	0.40	0.00	0.00	0.01
	-0.01	88.12	0.00	0.00	0.00	0.44	0.20	0.40
14	29.89		0.45	0.22	0.42	0.00	0.00	0.00
	22.01	0.98E+06	0.50	0.04	0.42	0.00	0.00	0.00
	-0.01	95.29	0.00	0.00	0.00	0.45	0.23	0.42

PROPULSIVE WING FORCE DATA

SUMMARY, RUN 222

PT	Q ALPHA BETA	REY NO HEIGHT	CLIS CNFIB CNUC	CDIS CAFIB CNUW	CPNIS CPNIB CNUT	CMNIS CMNIB CLTR	CYNIS CYNIB CDTR	CSFIS CSFIB CNTR
1	21.04		0.55	0.02	0.48	0.00	0.00	0.01
	-2.03	0.81E+06	0.55	0.04	0.48	0.00	0.00	0.01
	-0.01	83.78	0.23	0.00	0.23	0.43	0.12	0.36
2	21.15		0.59	0.04	0.52	0.00	0.00	0.02
	0.01	0.81E+06	0.59	0.04	0.52	0.00	0.00	0.02
	-0.01	88.33	0.23	0.00	0.23	0.46	0.14	0.40
3	21.04		0.64	0.06	0.58	0.00	0.00	0.01
	2.09	0.81E+06	0.64	0.06	0.58	0.00	0.00	0.01
	-0.01	88.53	0.23	0.00	0.23	0.51	0.15	0.46
4	21.15		0.69	0.08	0.62	0.00	0.00	0.01
	4.02	0.81E+06	0.69	0.03	0.62	0.00	0.00	0.01
	-0.01	87.14	0.23	0.00	0.23	0.56	0.17	0.50
5	21.04		0.75	0.11	0.67	0.00	0.00	0.01
	6.08	0.81E+06	0.75	0.03	0.67	0.00	0.00	0.01
	-0.01	88.73	0.23	0.00	0.23	0.61	0.19	0.55
6	21.04		0.81	0.14	0.71	0.00	0.00	0.01
	8.06	0.81E+06	0.82	0.02	0.71	0.00	0.00	0.01
	-0.01	88.17	0.23	0.00	0.23	0.67	0.22	0.59
7	21.04		0.87	0.17	0.76	0.00	0.00	0.01
	10.06	0.81E+06	0.89	0.02	0.76	0.00	0.00	0.01
	-0.01	87.19	0.23	0.00	0.23	0.73	0.25	0.64
8	20.92		0.94	0.21	0.81	0.00	0.00	0.01
	12.05	0.81E+06	0.96	0.01	0.81	0.00	0.00	0.01
	-0.01	88.78	0.23	0.00	0.23	0.78	0.28	0.69
9	20.92		1.00	0.28	0.86	0.00	-0.01	0.02
	14.06	0.81E+06	1.03	0.01	0.86	0.00	-0.01	0.02
	-0.01	87.55	0.23	0.00	0.23	0.85	0.32	0.74
10	21.15		1.04	0.30	0.90	0.00	0.00	0.00
	15.99	0.82E+06	1.08	0.00	0.90	0.00	0.00	0.00
	-0.01	86.53	0.23	0.00	0.23	0.89	0.38	0.78
11	20.92		1.11	0.36	0.96	0.00	0.00	0.01
	18.09	0.81E+06	1.16	0.00	0.96	0.00	0.00	0.01
	-0.01	88.00	0.23	0.00	0.23	0.96	0.41	0.84
12	20.92		1.11	0.36	0.96	0.00	0.00	0.00
	18.09	0.81E+06	1.17	-0.01	0.96	0.00	0.00	0.00
	-0.01	88.00	0.23	0.00	0.23	0.96	0.41	0.83
13	21.04		1.15	0.41	0.99	0.00	0.00	0.01
	20.06	0.81E+06	1.22	-0.02	0.99	0.00	0.00	0.01
	-0.01	85.30	0.23	0.00	0.23	1.00	0.45	0.87
14	20.92		1.20	0.46	1.03	0.00	0.00	0.00
	22.02	0.81E+06	1.29	-0.03	1.03	0.00	0.00	0.00
	-0.01	92.28	0.23	0.00	0.23	1.05	0.50	0.91

PROPULSIVE WING FORCE DATA

SUMMARY, RUN 223

PT	Q ALPHA BETA	REY NO HEIGHT	CLIS CNFIB CNUC	CDIS CAFIB CNUW	CPNIS CPNIB CNUT	CMNIS CMNIB CLTR	CYNIS CYNIB CDTR	CSFIS CSFIB CNTR
1	10.35		0.73	-0.08	0.62	0.00	0.00	0.01
	-2.04	0.57E+06	0.73	-0.06	0.62	0.00	0.00	0.01
	-0.01	85.75	0.47	0.00	0.47	0.48	0.13	0.38
2	10.60		0.77	-0.05	0.66	0.00	0.00	0.00
	0.01	0.58E+06	0.77	-0.05	0.66	0.00	0.00	0.00
	-0.01	87.35	0.45	0.00	0.45	0.52	0.14	0.43
3	10.69		0.82	-0.02	0.72	0.00	0.00	0.01
	2.07	0.58E+06	0.82	-0.05	0.72	0.00	0.00	0.01
	-0.01	87.51	0.45	0.00	0.45	0.58	0.16	0.48
4	10.48		0.89	0.01	0.78	0.00	0.00	0.01
	4.05	0.58E+06	0.89	-0.05	0.78	0.00	0.00	0.01
	-0.01	87.48	0.46	0.00	0.46	0.62	0.19	0.54
5	10.35		0.96	0.05	0.84	0.00	0.00	0.01
	6.00	0.57E+06	0.96	-0.06	0.84	0.00	0.00	0.01
	-0.01	87.89	0.47	0.00	0.47	0.68	0.22	0.60
6	10.69		0.98	0.08	0.88	0.00	0.00	0.00
	8.05	0.58E+06	0.99	-0.06	0.88	0.00	0.00	0.00
	-0.01	87.39	0.45	0.00	0.45	0.71	0.24	0.65
7	10.69		1.08	0.13	0.93	0.00	0.00	0.02
	10.04	0.58E+06	1.08	-0.06	0.93	0.00	0.00	0.02
	-0.01	87.01	0.45	0.00	0.45	0.79	0.28	0.76
8	10.58		1.15	0.18	0.99	0.00	0.00	0.01
	12.04	0.58E+06	1.17	-0.07	0.99	0.00	0.00	0.01
	-0.01	88.58	0.46	0.00	0.46	0.86	0.32	0.75
9	10.58		1.22	0.23	1.03	0.00	-0.01	0.01
	14.05	0.58E+06	1.24	-0.07	1.03	0.00	-0.01	0.01
	-0.01	88.13	0.46	0.00	0.46	0.92	0.36	0.79
10	10.46		1.28	0.28	1.08	0.00	-0.01	0.00
	16.00	0.58E+06	1.31	-0.08	1.08	0.00	0.00	0.00
	-0.01	87.48	0.46	0.00	0.46	0.98	0.40	0.84
11	10.35		1.37	0.35	1.13	0.00	-0.01	0.01
	18.04	0.57E+06	1.41	-0.09	1.13	0.01	-0.01	0.01
	-0.01	88.73	0.47	0.00	0.47	1.06	0.46	0.89
12	10.23		1.43	0.41	1.18	0.00	-0.01	0.00
	20.04	0.57E+06	1.48	-0.10	1.18	0.01	-0.01	0.00
	-0.01	88.03	0.47	0.00	0.47	1.11	0.51	0.94
13	10.23		1.47	0.47	1.23	0.00	-0.01	0.01
	22.04	0.57E+06	1.53	-0.11	1.23	0.00	-0.01	0.01
	-0.01	95.28	0.47	0.00	0.47	1.15	0.56	0.98

PROPULSIVE WING FORCE DATA

SUMMARY, RUN 224

PT	Q ALPHA BETA	REY NO HEIGHT	CL1S CNF1B CNUC	CD1S CAF1B CNUM	CPM1S CPM1B CNUT	CRM1S CRM1B CLTR	CYM1S CYM1B CDTR	CSF1S CSF1B CNTR
1	5.29		1.08	-0.28	0.87	0.01	0.00	0.02
	-1.99	0.41E+06	1.09	-0.25	0.53	0.01	0.00	0.02
	-0.01	88.16	0.92	0.00	0.92	0.58	0.12	0.35
2	5.17		1.14	-0.25	0.90	0.01	0.00	0.01
	0.03	0.41E+06	1.14	-0.25	0.90	0.01	0.00	0.01
	-0.01	88.81	0.94	0.00	0.94	0.62	0.15	0.42
3	5.17		1.20	-0.21	0.96	0.01	0.00	0.02
	2.12	0.41E+06	1.20	-0.25	0.96	0.01	0.00	0.02
	-0.01	85.71	0.94	0.00	0.94	0.67	0.17	0.47
4	5.29		1.22	-0.17	1.00	0.01	0.00	0.01
	4.01	0.41E+06	1.21	-0.25	1.00	0.01	0.00	0.01
	-0.01	87.77	0.92	0.00	0.92	0.09	0.19	0.52
5	5.17		1.30	-0.12	1.08	0.01	0.00	0.00
	6.95	0.41E+06	1.27	-0.26	1.08	0.01	0.00	0.00
	-0.01	85.71	0.94	0.00	0.94	0.73	0.22	0.60
6	5.29		1.35	-0.06	1.15	0.01	0.00	0.00
	8.06	0.41E+06	1.33	-0.24	1.15	0.01	0.00	0.00
	-0.01	88.50	0.92	0.00	0.92	0.78	0.28	0.67
7	5.29		1.42	0.00	1.21	0.01	0.00	0.00
	10.02	0.41E+06	1.40	-0.25	1.21	0.01	0.00	0.00
	-0.01	87.12	0.92	0.00	0.92	0.85	0.29	0.73
8	5.29		1.51	0.06	1.28	0.01	0.00	0.00
	12.02	0.41E+06	1.49	-0.25	1.28	0.01	0.00	0.00
	-0.01	86.91	0.92	0.00	0.92	0.93	0.34	0.78
9	5.29		1.58	0.12	1.30	0.01	0.00	-0.02
	13.99	0.41E+06	1.54	-0.26	1.30	0.01	0.00	-0.02
	-0.01	88.96	0.92	0.00	0.92	0.97	0.37	0.83
10	5.17		1.67	0.20	1.38	0.01	0.00	0.00
	16.05	0.41E+06	1.66	-0.27	1.38	0.01	0.00	0.00
	-0.01	87.82	0.94	0.00	0.94	1.06	0.44	0.00
11	5.29		1.71	0.28	1.40	0.01	-0.01	0.02
	18.07	0.41E+06	1.71	-0.27	1.40	0.01	0.00	0.02
	-0.01	87.88	0.92	0.00	0.92	1.10	0.49	0.92
12	5.29		1.75	0.34	1.43	0.01	0.00	0.00
	20.03	0.41E+06	1.76	-0.28	1.43	0.01	0.00	0.00
	-0.01	89.85	0.92	0.00	0.92	1.14	0.53	0.96
13	5.29		1.83	0.43	1.46	0.01	-0.01	0.01
	22.04	0.41E+06	1.85	-0.29	1.46	0.01	0.00	0.01
	-0.01	97.16	0.92	0.00	0.92	1.21	0.60	0.99

PROPULSIVE WING FORCE DATA

SUMMARY, RUN 225

PT	Q ALPHA BETA	REY NO HEIGHT	CL1S CNF1B CNUC	CD1S CAF1B CNUM	CPM1S CPM1B CNUT	CRM1S CRM1B CLTR	CYM1S CYM1B CDTR	CSF1S CSF1B CNTR
1	2.85		1.73	-0.72	1.22	0.01	0.01	0.04
	-2.04	0.29E+06	1.76	-0.66	1.22	0.01	0.01	0.04
	-0.01	88.75	1.84	0.00	1.84	0.74	0.00	0.27
2	2.76		1.77	-0.82	1.21	0.01	0.00	0.05
	0.02	0.30E+06	1.77	-0.82	1.21	0.01	0.00	0.05
	0.01	88.80	1.77	0.00	1.77	0.79	0.13	0.30
3	2.85		1.90	-0.57	1.32	0.01	0.00	0.05
	2.06	0.29E+06	1.88	-0.84	1.32	0.01	0.00	0.05
	-0.01	88.71	1.84	0.00	1.84	0.86	0.16	0.37
4	2.76		1.85	-0.49	1.32	0.01	0.00	0.04
	4.04	0.30E+06	1.82	-0.82	1.32	0.01	0.00	0.04
	-0.01	87.46	1.76	0.00	1.76	0.83	0.18	0.41
5	2.85		1.87	-0.45	1.45	0.01	0.00	0.00
	6.06	0.29E+06	1.81	-0.85	1.45	0.01	0.00	0.00
	-0.01	87.53	1.84	0.00	1.84	0.88	0.22	0.50
6	2.85		2.03	-0.37	1.52	0.01	0.00	-0.01
	8.05	0.29E+06	1.86	-0.85	1.52	0.01	0.00	-0.01
	-0.01	87.50	1.84	0.00	1.84	0.92	0.28	0.57
7	2.85		2.10	-0.29	1.61	0.01	0.00	-0.02
	10.00	0.29E+06	2.02	-0.85	1.61	0.01	0.00	-0.02
	-0.01	87.82	1.84	0.00	1.84	0.96	0.30	0.66
8	2.53		2.28	-0.21	1.72	0.01	0.00	0.01
	12.04	-.54E+06	2.19	-0.86	1.72	0.01	0.01	0.01
	-0.01	88.12	1.92	0.00	1.92	1.06	0.36	0.73
9	2.76		2.13	-0.13	1.86	0.01	0.01	-0.05
	14.01	-.75E+06	2.04	-0.84	1.86	0.01	0.01	-0.05
	-0.01	88.78	1.77	0.00	1.77	1.01	0.36	0.75
10	2.85		2.29	-0.04	1.78	0.01	0.00	-0.02
	16.02	0.29E+06	2.19	-0.87	1.78	0.01	0.01	-0.02
	-0.01	87.95	1.83	0.00	1.83	1.10	0.43	0.84
11	2.85		2.32	0.04	1.85	0.01	0.01	-0.05
	18.04	0.29E+06	2.22	-0.88	1.85	0.01	0.01	-0.05
	-0.01	88.11	1.84	0.00	1.84	1.12	0.47	0.91
12	2.53		2.50	0.14	1.99	0.02	0.01	-0.06
	20.02	0.29E+06	2.40	-0.72	1.99	0.01	0.02	-0.06
	-0.01	90.38	1.92	0.00	1.92	1.23	0.55	1.00
13	2.53		2.66	0.28	2.06	0.01	0.00	-0.02
	22.02	0.28E+06	2.52	-0.71	2.06	0.01	0.01	-0.02
	-0.01	97.87	1.92	0.00	1.92	1.31	0.64	1.09

PROPULSIVE WING FORCE DATA

SUMMARY, RUN 226

PT	Q ALPHA BETA	REY NO HEIGHT	CL1S CNF1B CNUC	CD1S CAF1B CNUW	CPM1S CPM1B CNUT	CNM1S CNM1B CLTR	CYM1S CYM1B CDTR	CSF1S CSF1B CNTR
1	1.27		3.17	-1.88	1.97	0.03	0.02	0.12
	-2.06	0.20E+06	3.23	-1.57	1.97	0.03	0.02	0.12
	-0.01	88.09	3.85	0.00	3.85	1.11	0.02	-0.01
2	1.27		3.10	-1.55	2.04	0.03	0.00	0.11
	0.05	0.20E+06	3.10	-1.55	2.04	0.03	0.00	0.11
	-0.01	87.88	3.83	0.00	3.83	0.98	0.08	0.06
3	1.27		3.15	-1.45	2.11	0.02	0.00	0.05
	2.07	0.20E+06	3.09	-1.58	2.11	0.02	0.00	0.05
	-0.01	87.81	3.85	0.00	3.85	0.97	0.10	0.13
4	1.38		3.18	-1.23	1.98	0.02	0.00	0.00
	4.06	0.21E+06	3.06	-1.45	1.98	0.02	0.00	0.00
	-0.01	87.70	3.51	0.00	3.51	1.12	0.11	0.17
5	1.38		3.18	-1.12	2.07	0.02	0.00	-0.02
	6.02	0.21E+06	3.04	-1.44	2.07	0.02	0.00	-0.02
	-0.01	88.80	3.52	0.00	3.52	1.09	0.16	0.25
6	1.38		3.26	-0.99	2.13	0.02	0.00	-0.02
	8.00	0.21E+06	3.09	-1.43	2.13	0.02	0.00	-0.02
	-0.01	87.83	3.52	0.00	3.52	1.13	0.27	0.31
7	1.38		3.31	-0.88	2.22	0.03	0.01	-0.04
	10.05	0.21E+06	3.16	-1.43	2.22	0.02	0.01	-0.04
	-0.01	87.94	3.53	0.00	3.53	1.14	0.28	0.41
8	1.38		3.37	-0.74	2.34	0.03	0.01	-0.04
	12.08	0.21E+06	3.14	-1.42	2.34	0.02	0.02	-0.04
	-0.01	87.88	3.51	0.00	3.51	1.16	0.31	0.53
9	1.38		3.49	-0.82	2.38	0.02	0.00	-0.03
	14.01	0.21E+06	3.23	-1.44	2.38	0.02	0.00	-0.03
	-0.01	88.87	3.52	0.00	3.52	1.25	0.35	0.58
10	1.38		3.57	-0.48	2.42	0.03	0.00	-0.10
	16.05	0.21E+06	3.30	-1.48	2.42	0.02	0.01	-0.10
	-0.01	87.44	3.52	0.00	3.52	1.30	0.40	0.61
11	1.38		3.81	-0.34	2.50	0.03	0.01	-0.07
	18.06	0.21E+06	3.33	-1.44	2.50	0.02	0.02	-0.07
	-0.01	87.34	3.53	0.00	3.53	1.31	0.47	0.88
12	1.27		3.95	-0.27	2.82	0.03	0.02	-0.15
	20.05	0.20E+06	3.82	-1.80	2.82	0.02	0.03	-0.15
	-0.01	91.02	3.84	0.00	3.84	1.41	0.53	0.85
13	1.27		3.95	-0.13	2.92	0.03	0.01	-0.15
	22.05	0.20E+06	3.82	-1.80	2.92	0.02	0.02	-0.15
	-0.01	98.45	3.84	0.00	3.84	1.30	0.58	0.95

PROPULSIVE WING FORCE DATA

SUMMARY, RUN 226

PT	Q ALPHA BETA	REY NO HEIGHT	CL1S CNF1B CNUC	CD1S CAF1B CNUW	CPM1S CPM1B CNUT	CNM1S CNM1B CLTR	CYM1S CYM1B CDTR	CSF1S CSF1B CNTR
2	0.00		22.90	-29.80	-181.50	0.00	22.81	-1.70
	-0.05	0.30E+06	22.82	-29.58	-181.50	0.02	22.61	-1.70
	-0.01	87.05	16.02	7.04	23.05	22.22	-23.72	-103.30
3	0.00		37.38	-43.58	-275.10	4.56	21.04	-1.43
	-0.03	0.30E+06	37.40	-43.58	-275.10	4.57	21.04	-1.43
	-0.01	87.05	27.48	45.37	72.85	28.38	-33.63	-288.20
4	0.00		59.83	-82.81	-411.00	20.18	19.49	-0.79
	-0.01	0.30E+06	59.83	-82.80	-411.00	20.19	19.49	-0.79
	-0.01	87.05	40.20	72.73	112.90	38.70	-48.28	-430.00
5	0.00		80.40	-84.20	-587.00	18.42	25.42	-0.79
	0.02	0.30E+06	80.43	-84.23	-587.05	18.41	25.43	-0.79
	-0.01	87.05	52.93	98.32	152.30	52.21	-61.94	-594.10
6	0.00		110.40	-112.20	-844.80	23.81	27.35	0.18
	0.04	0.30E+06	110.30	-112.30	-844.50	23.78	27.37	0.18
	-0.01	87.05	60.80	134.40	204.20	71.94	-83.51	-800.50

PROPULSIVE WING FORCE DATA

SUMMARY, RUN 229

PT	Q ALPHA BETA	REY NO HEIGHT	CL1S CNF1B CNUC	CD1S CAF1B CNUM	CPM1S CPM1B CMUT	CNM1S CNM1B CLTR	CYN1S CYN1B CDTR	CSF1S CSF1B CNTR
16	0.00		-1.85	-0.34	5.31	-0.87	11.77	-1.91
	-0.03	0.30E+06	-1.85	-0.34	5.31	-0.87	11.77	-1.91
	-0.01	87.06	0.16	0.32	0.48	-0.36	-0.20	5.34
17	0.00		42.54	-43.12	-285.00	11.42	21.77	-0.81
	0.02	0.30E+06	42.52	-43.14	-285.00	11.41	21.78	-0.81
	-0.01	87.06	23.90	46.00	70.80	32.51	-33.93	-295.20
18	0.00		85.07	-84.94	-429.00	22.54	17.82	0.37
	0.05	0.30E+06	85.01	-84.99	-429.00	22.52	17.84	0.37
	-0.01	87.06	29.50	78.79	118.30	44.50	-47.98	-440.50
19	0.00		88.14	-89.21	-576.20	29.82	19.86	0.37
	0.06	0.30E+06	88.02	-89.33	-576.20	29.75	19.90	0.37
	-0.01	87.06	55.31	107.50	162.80	57.87	-85.88	-864.50
20	0.00		108.30	-115.00	-838.80	23.81	48.58	-7.25
	0.00	0.30E+06	108.10	-115.20	-838.80	27.74	48.81	-7.25
	-0.01	87.06	73.85	144.80	218.60	88.43	-85.57	-875.80

PROPULSIVE WING FORCE DATA

SUMMARY, RUN 230

PT	Q ALPHA BETA	REY NO HEIGHT	CL1S CNF1B CNUC	CD1S CAF1B CNUM	CPM1S CPM1B CMUT	CNM1S CNM1B CLTR	CYN1S CYN1B CDTR	CSF1S CSF1B CNTR
2	30.23		0.35	0.10	-0.11	0.00	0.00	0.01
	-2.02	0.99E+06	0.35	0.11	-0.11	0.00	0.00	0.01
	-0.01	88.94	0.00	0.00	0.00	0.38	0.10	-0.11
3	30.12		0.48	0.12	-0.11	0.00	0.00	0.01
	-0.01	0.99E+06	0.48	0.13	-0.11	0.00	0.00	0.01
	-0.01	55.64	0.00	0.00	0.00	-0.48	0.12	-0.11
4	30.12		0.57	0.14	-0.08	0.00	0.00	0.00
	2.08	0.99E+06	0.58	0.12	-0.08	0.00	0.00	0.00
	-0.01	88.03	0.00	0.00	0.00	0.58	0.14	-0.08
5	30.00		0.71	0.17	-0.08	0.00	0.00	0.01
	4.07	0.99E+06	0.72	0.12	-0.08	0.00	0.00	0.01
	-0.01	88.18	0.00	0.00	0.00	0.71	0.17	-0.08
6	29.88		0.88	0.22	-0.11	0.00	0.00	0.00
	6.07	0.98E+06	0.90	0.12	-0.11	0.00	0.00	0.00
	-0.01	87.82	0.00	0.00	0.00	0.88	0.22	-0.11
7	29.77		1.03	0.27	-0.08	0.00	0.00	0.00
	8.08	0.98E+06	1.06	0.12	-0.08	0.00	0.00	0.00
	-0.01	88.93	0.00	0.00	0.00	1.04	0.27	-0.08
8	29.88		1.18	0.32	-0.08	0.00	0.00	0.00
	10.07	0.98E+06	1.22	0.11	-0.08	0.00	0.00	0.00
	-0.01	88.14	0.00	0.00	0.00	1.18	0.33	-0.08
9	30.00		1.28	0.37	-0.08	0.00	0.00	0.00
	12.01	0.98E+06	1.31	0.10	-0.08	0.00	0.00	0.00
	-0.01	88.11	0.00	0.00	0.00	1.28	0.38	-0.08
10	29.88		1.37	0.44	-0.04	0.00	0.00	0.00
	14.01	0.98E+06	1.44	0.10	-0.04	0.00	0.00	0.00
	-0.01	88.57	0.00	0.00	0.00	1.37	0.44	-0.04
11	29.77		1.50	0.53	-0.05	0.00	0.00	0.00
	16.07	0.98E+06	1.58	0.08	-0.05	0.00	0.00	0.00
	-0.01	88.33	0.00	0.00	0.00	1.50	0.53	-0.05
12	29.77		1.56	0.61	-0.06	0.00	0.00	-0.01
	18.02	0.98E+06	1.58	0.08	-0.06	0.00	0.00	-0.01
	-0.01	87.24	0.00	0.00	0.00	1.57	0.61	-0.06
13	30.00		1.67	0.70	-0.11	0.00	-0.01	0.01
	20.08	0.98E+06	1.81	0.09	-0.11	0.00	-0.01	0.01
	-0.01	87.75	0.00	0.00	0.00	1.67	0.71	-0.10
14	29.77		1.79	0.82	-0.12	0.00	-0.01	0.01
	22.07	0.98E+06	1.96	0.09	-0.12	0.00	-0.01	0.01
	-0.01	84.84	0.00	0.00	0.00	1.79	0.82	-0.12
15	29.88		0.51	0.12	-0.13	-0.01	0.00	0.00
	0.00	0.99E+06	0.51	0.12	-0.13	-0.01	0.00	0.00
	-0.01	88.93	0.00	0.00	0.00	0.51	0.12	-0.13
16	30.12		0.68	0.17	-0.08	0.01	-0.01	0.01
	4.05	0.99E+06	0.70	0.12	-0.08	0.01	-0.01	0.01
	-0.01	87.75	0.00	0.00	0.00	0.69	0.17	-0.08
17	30.00		1.03	0.28	-0.10	0.00	0.00	0.00
	8.07	0.99E+06	1.05	0.12	-0.10	0.00	0.00	0.00
	-0.01	87.15	0.00	0.00	0.00	1.03	0.28	-0.10
18	29.77		1.27	0.37	-0.05	0.00	0.00	0.00
	12.08	0.98E+06	1.31	0.10	-0.05	0.00	0.00	0.00
	-0.01	87.74	0.00	0.00	0.00	1.27	0.38	-0.05
19	30.12		1.77	0.81	-0.11	0.00	0.00	0.00
	22.02	0.98E+06	1.85	0.09	-0.11	0.00	0.00	0.00
	-0.01	84.57	0.00	0.00	0.00	1.77	0.81	-0.11

PROPULSIVE MINE FORCE DATA

SUMMARY, RUN 231

PT	Q ALPHA BETA	REY NO HEIGHT	CL1S CNF1B CNUC	CD1S CAF1B CNUM	CPM1S CPM1B CNUT	CRM1S CRM1B CLTR	CYM1S CYM1B CDTR	CSF1S CSF1B CNTR
1	21.15 -2.04 -0.01	0.83E+06 88.02	1.05 1.06 0.23	-0.14 -0.10 0.45	-0.05 -0.05 0.68	0.01 0.00 0.71	0.00 0.00 0.24	0.01 0.01 -0.07
2	21.27 -0.01 -0.01	0.83E+06 87.80	1.10 1.10 0.23	-0.11 -0.11 0.44	0.00 0.00 0.67	0.00 0.00 0.75	-0.01 -0.01 0.26	0.03 0.03 -0.02
3	21.27 1.98 -0.01	0.83E+06 87.27	1.22 1.22 0.23	-0.06 -0.10 0.45	0.03 0.03 0.66	0.00 0.00 0.86	-0.01 -0.01 0.29	0.02 0.02 0.01
4	21.15 4.06 -0.01	0.83E+06 87.18	1.40 1.40 0.23	0.00 -0.10 0.45	0.03 0.03 0.68	0.01 0.01 1.02	-0.01 -0.01 0.34	0.02 0.02 0.00
5	21.15 6.06 -0.01	0.83E+06 86.63	1.58 1.58 0.23	0.07 -0.10 0.45	0.00 0.00 0.68	0.02 0.02 1.18	0.00 0.01 0.40	-0.02 -0.02 -0.02
6	21.04 8.02 -0.01	0.83E+06 86.51	1.81 1.81 0.23	0.16 -0.10 0.45	-0.04 -0.04 0.68	0.02 0.02 1.40	0.00 0.00 0.47	0.00 0.00 -0.07
7	20.92 10.01 -0.01	0.83E+06 87.35	2.02 2.04 0.23	0.28 -0.09 0.46	-0.05 -0.05 0.69	0.02 0.02 1.60	-0.01 0.00 0.57	0.00 0.00 -0.07
8	21.04 12.02 -0.01	0.83E+06 87.92	2.28 2.31 0.23	0.40 -0.08 0.45	-0.09 -0.09 0.68	0.01 0.02 1.85	-0.01 0.00 0.68	0.00 0.00 -0.11
9	20.81 14.06 -0.01	0.83E+06 88.84	2.51 2.57 0.24	0.55 -0.08 0.46	-0.11 -0.11 0.69	0.01 0.01 2.06	0.00 0.00 0.83	0.00 0.00 -0.13
10	20.92 16.05 -0.01	0.83E+06 87.82	2.70 2.78 0.23	0.70 -0.06 0.46	-0.13 -0.13 0.69	0.01 0.01 2.24	-0.01 0.00 0.96	0.00 0.00 -0.15
11	21.04 18.07 -0.01	0.83E+06 88.06	2.88 3.00 0.23	0.88 -0.06 0.46	-0.12 -0.12 0.69	0.00 0.01 2.42	-0.01 -0.01 1.10	0.01 0.01 -0.14
12	20.81 20.00 -0.01	0.83E+06 85.88	3.03 3.20 0.24	1.01 -0.08 0.46	-0.10 -0.10 0.70	0.01 0.01 2.58	-0.01 -0.01 1.24	0.00 0.00 -0.12
13	21.04 22.02 -0.01	0.83E+06 83.06	3.11 3.32 0.23	1.16 -0.09 0.46	-0.07 -0.07 0.68	0.01 0.01 2.63	-0.01 -0.01 1.37	0.00 0.00 -0.09

PROPULSIVE MINE FORCE DATA

SUMMARY, RUN 232

PT	Q ALPHA BETA	REY NO HEIGHT	CL1S CNF1B CNUC	CD1S CAF1B CNUM	CPM1S CPM1B CNUT	CRM1S CRM1B CLTR	CYM1S CYM1B CDTR	CSF1S CSF1B CNTR
1	10.46 -2.03 -0.01	0.50E+06 86.70	1.47 1.48 0.47	-0.52 -0.47 0.92	-0.13 -0.13 1.39	0.00 0.00 0.78	0.00 0.00 0.26	0.02 0.02 -0.16
2	10.81 0.03 -0.01	0.00E+06 89.83	1.53 1.52 0.45	-0.46 -0.46 0.89	-0.07 -0.07 1.34	-0.01 -0.01 0.81	0.00 0.00 0.27	0.03 0.03 -0.11
3	10.46 2.02 -0.01	0.50E+06 87.85	1.73 1.71 0.47	-0.41 -0.47 0.92	-0.06 -0.06 1.39	0.00 0.00 0.97	0.00 0.00 0.32	0.01 0.01 -0.10
4	10.58 4.01 -0.01	0.50E+06 87.83	1.83 1.80 0.47	-0.34 -0.46 0.91	-0.02 -0.02 1.38	0.00 0.00 1.05	0.00 0.00 0.36	0.01 0.01 -0.07
5	10.46 6.00 -0.01	0.50E+06 85.22	2.05 2.01 0.47	-0.24 -0.46 0.92	-0.04 -0.04 1.39	0.00 0.00 1.24	0.00 0.00 0.43	0.00 0.00 -0.06
6	10.35 8.00 -0.01	0.50E+06 87.86	2.20 2.15 0.47	-0.15 -0.46 0.93	0.03 0.03 1.40	0.00 0.02 1.38	-0.01 -0.01 0.50	0.00 0.00 -0.02
7	10.35 10.00 -0.01	0.50E+06 85.07	2.44 2.40 0.47	-0.03 -0.45 0.93	0.00 0.00 1.40	0.03 0.03 1.57	0.00 0.00 0.60	-0.02 -0.02 -0.05
8	10.23 12.00 -0.01	0.50E+06 86.70	2.66 2.62 0.46	0.10 -0.45 0.94	-0.01 -0.01 1.42	0.04 0.04 1.76	-0.01 0.00 0.71	-0.03 -0.03 -0.06
9	10.23 14.00 -0.01	0.50E+06 87.61	2.92 2.90 0.46	0.28 -0.44 0.94	-0.03 -0.03 1.42	0.03 0.03 2.00	-0.01 0.00 0.85	-0.01 -0.01 -0.06
10	10.35 16.01 -0.01	0.50E+06 88.56	3.00 3.09 0.47	0.44 -0.43 0.94	-0.06 -0.06 1.41	0.01 0.01 2.16	-0.01 0.00 0.88	0.00 0.00 -0.11
11	10.35 18.00 -0.01	0.50E+06 88.19	3.38 3.42 0.46	0.68 -0.43 0.94	-0.11 -0.11 1.41	-0.01 -0.01 2.44	0.00 0.00 1.15	0.01 0.01 -0.16
12	10.23 20.00 -0.01	0.50E+06 88.82	3.82 3.88 0.46	0.85 -0.44 0.95	-0.14 -0.14 1.43	-0.02 -0.01 2.85	0.00 -0.01 1.32	0.01 0.01 -0.19
13	10.58 22.03 -0.01	0.50E+06 95.95	3.73 3.85 0.47	1.05 -0.42 0.91	-0.12 -0.12 1.38	0.00 0.00 2.77	0.00 0.00 1.46	0.00 0.00 -0.17

PROPULSIVE WING FORCE DATA

SUMMARY, RUN 233

PT	Q ALPHA BETA	REY NO HEIGHT	CL1S CNF1B CNUC	CD1S CAF1B CNUW	CPM1S CPM1B CMUT	CMM1S CMM1B CLTR	CYM1S CYM1B CDTR	CSF1S CSF1B CMTR
1	5.52		2.17	-1.18	-0.31	-0.01	-0.01	0.08
	-2.04	0.43E+06	2.21	-1.11	-0.31	-0.01	-0.01	0.08
	-0.01	87.11	0.88	1.80	2.95	0.86	0.26	-0.39
2	5.40		2.32	-1.13	-0.25	0.01	0.00	0.05
	0.05	0.42E+06	2.32	-1.13	-0.25	0.01	0.00	0.05
	-0.01	89.73	0.88	1.73	2.61	0.93	0.30	-0.34
3	5.40		2.41	-1.05	-0.16	0.01	0.00	0.03
	2.01	0.42E+06	2.37	-1.13	-0.16	0.01	0.00	0.03
	-0.01	87.49	0.88	1.73	2.61	0.97	0.33	-0.25
4	5.40		2.50	-0.98	-0.14	0.01	0.01	-0.02
	4.06	0.42E+06	2.51	-1.14	-0.14	0.01	0.01	-0.02
	-0.01	87.32	0.88	1.73	2.60	1.10	0.37	-0.22
5	5.40		2.77	-0.85	-0.11	0.01	0.00	0.01
	8.07	0.42E+06	2.66	-1.14	-0.11	0.01	0.00	0.01
	-0.01	88.59	0.88	1.74	2.61	1.23	0.43	-0.20
6	5.29		2.85	-0.76	-0.06	0.02	0.01	0.00
	8.04	0.42E+06	2.81	-1.17	-0.06	0.02	0.01	0.00
	-0.01	88.86	0.90	1.77	2.66	1.34	0.49	-0.15
7	5.40		3.16	-0.59	-0.09	0.00	0.00	-0.02
	10.02	0.42E+06	3.01	-1.13	-0.09	0.00	0.00	-0.02
	-0.01	87.52	0.88	1.73	2.61	1.54	0.58	-0.17
8	5.29		3.41	-0.43	-0.05	0.02	-0.01	0.00
	12.03	0.42E+06	3.25	-1.14	-0.05	0.02	0.00	0.00
	-0.01	88.17	0.90	1.77	2.67	1.72	0.70	-0.14
9	5.29		3.66	-0.25	-0.12	0.01	0.00	-0.03
	14.02	0.42E+06	3.49	-1.14	-0.12	0.01	0.00	-0.03
	-0.01	85.43	0.90	1.77	2.67	1.93	0.82	-0.21
10	5.17		3.91	-0.08	-0.10	0.02	0.00	-0.03
	16.00	0.41E+06	3.73	-1.15	-0.10	0.02	0.00	-0.03
	-0.01	87.75	0.92	1.81	2.73	2.10	0.96	-0.19
11	5.29		4.11	0.18	-0.18	0.04	0.00	-0.06
	18.06	0.42E+06	3.95	-1.12	-0.18	0.04	0.01	-0.06
	-0.01	83.57	0.90	1.78	2.68	2.30	1.11	-0.27
12	5.29		4.23	0.38	-0.08	0.05	0.00	-0.07
	20.01	0.42E+06	4.10	-1.11	-0.08	0.04	0.01	-0.07
	-0.01	80.17	0.90	1.77	2.67	2.38	1.24	-0.17
13	5.40		4.45	0.63	-0.15	0.03	0.00	-0.06
	22.08	0.42E+06	4.36	-1.09	-0.15	0.03	0.01	-0.06
	-0.01	87.87	0.88	1.73	2.62	2.82	1.43	-0.24

PROPULSIVE WING FORCE DATA

SUMMARY, RUN 234

PT	Q ALPHA BETA	REY NO HEIGHT	CL1S CNF1B CNUC	CD1S CAF1B CNUW	CPM1S CPM1B CMUT	CMM1S CMM1B CLTR	CYM1S CYM1B CDTR	CSF1S CSF1B CMTR
2	0.00		0.13	-0.42	-0.28	2.11	40.06	-0.31
	0.03	0.30E+06	0.13	-0.42	-0.28	2.09	40.06	-0.31
	0.00	86.75	0.00	0.28	0.28	-16.28	30.50	-1.95
3	0.00		29.17	-33.43	-726.70	10.33	46.67	0.25
	0.00	0.30E+06	29.17	-33.43	-726.70	10.32	46.66	0.25
	0.00	86.75	0.00	51.56	51.56	-15.46	11.45	-731.90
4	0.00		41.16	-50.75	-1063.00	9.26	55.32	-0.29
	-0.01	0.30E+06	41.19	-50.74	-1063.00	9.27	55.32	-0.29
	0.00	86.75	0.00	81.32	81.32	-25.81	19.50	-1067.00
5	0.00		58.24	-70.24	-1522.00	8.86	55.28	-0.67
	-0.03	0.30E+06	58.26	-70.21	-1522.00	8.86	55.27	-0.67
	0.00	86.75	0.00	113.70	113.70	-29.20	10.75	-1527.00
6	0.00		66.47	-90.90	-2029.00	22.02	76.59	-1.63
	-0.05	0.30E+06	66.56	-90.82	-2029.00	22.00	76.57	-1.63
	0.00	86.75	0.00	149.00	149.00	-28.62	25.13	-2036.00

PROPULSIVE WING FORCE DATA

SUMMARY. RUN 235

PT	Q ALPHA BETA	REY NO HEIGHT	CLIS CNFIB CNUC	CDIS CAFIB CNWW	CPMIS CPMIB CMUT	CRMIS CRMIB CLTR	CYMIS CYMIB CDTR	CSFIS CSFIB CNTR
20	30.35		0.48	0.09	-0.35	0.00	0.00	0.01
	-2.31	0.10E+07	0.48	0.11	-0.35	0.00	0.00	0.01
	0.00	87.74	0.00	0.00	0.00	0.48	0.10	-0.35
21	30.12		0.42	0.09	-0.27	0.00	0.00	0.01
	0.00	0.10E+07	0.42	0.09	-0.27	0.00	0.00	0.01
	0.00	87.47	0.00	0.00	0.00	0.42	0.08	-0.27
22	30.12		0.47	0.09	-0.26	0.00	0.00	0.00
	2.03	0.99E+06	0.47	0.07	-0.26	0.00	0.00	0.00
	0.00	87.87	0.00	0.00	0.00	0.48	0.10	-0.26
23	30.00		0.58	0.11	-0.30	0.00	0.00	0.00
	4.09	0.99E+06	0.58	0.07	-0.30	0.00	0.00	0.00
	0.00	88.15	0.00	0.00	0.00	0.57	0.12	-0.30
24	30.00		0.67	0.13	-0.32	0.00	0.00	0.00
	6.02	0.99E+06	0.68	0.06	-0.32	0.00	0.00	0.00
	0.00	88.71	0.00	0.00	0.00	0.66	0.13	-0.31
25	29.77		0.92	0.18	-0.43	0.00	0.00	0.00
	8.02	0.98E+06	0.93	0.06	-0.43	0.00	0.00	0.00
	0.00	88.01	0.00	0.00	0.00	0.91	0.18	-0.43
26	30.23		1.01	0.22	-0.45	0.00	0.00	0.00
	10.07	0.99E+06	1.03	0.04	-0.45	0.00	0.00	0.00
	0.00	87.42	0.00	0.00	0.00	1.00	0.22	-0.45
27	30.12		1.12	0.27	-0.47	0.00	0.00	0.00
	12.05	0.99E+06	1.15	0.03	-0.47	0.00	0.00	0.00
	0.00	87.36	0.00	0.00	0.00	1.11	0.27	-0.47
28	30.00		1.22	0.32	-0.48	0.00	0.00	0.00
	14.02	0.99E+06	1.26	0.02	-0.48	0.00	0.00	0.00
	0.00	87.77	0.00	0.00	0.00	1.21	0.33	-0.48
29	29.88		1.21	0.38	-0.47	0.00	0.00	0.00
	16.07	0.99E+06	1.27	0.03	-0.47	0.00	0.00	0.00
	0.00	88.47	0.00	0.00	0.00	1.20	0.38	-0.47
30	30.35		1.25	0.45	-0.48	0.00	0.00	0.00
	18.05	0.10E+07	1.33	0.04	-0.48	0.00	0.00	0.00
	0.00	87.26	0.00	0.00	0.00	1.25	0.45	-0.48
31	30.00		1.29	0.53	-0.49	0.00	0.00	0.01
	20.02	0.99E+06	1.39	0.05	-0.49	0.00	0.00	0.01
	0.00	90.82	0.00	0.00	0.00	1.28	0.53	-0.49
32	29.89		1.29	0.59	-0.49	0.00	0.00	-0.01
	22.08	0.99E+06	1.42	0.06	-0.49	0.00	0.00	-0.01
	0.00	88.11	0.00	0.00	0.00	1.29	0.60	-0.49

PROPULSIVE WING FORCE DATA

SUMMARY. RUN 236

PT	Q ALPHA BETA	REY NO HEIGHT	CLIS CNFIB CNUC	CDIS CAFIB CNWW	CPMIS CPMIB CMUT	CRMIS CRMIB CLTR	CYMIS CYMIB CDTR	CSFIS CSFIB CNTR
1	21.15		1.18	-0.15	-0.82	0.00	0.00	0.01
	-2.05	0.83E+06	1.18	-0.11	-0.82	0.00	0.00	0.01
	0.00	88.34	0.00	0.47	0.47	0.83	0.15	-0.70
2	21.15		1.29	-0.11	-0.85	0.00	0.00	0.01
	-0.01	0.83E+06	1.29	-0.11	-0.85	0.00	0.00	0.01
	0.00	89.24	0.00	0.48	0.48	1.03	0.18	-0.72
3	21.15		1.42	-0.06	-0.88	0.00	0.00	0.01
	2.06	0.83E+06	1.42	-0.11	-0.88	0.00	0.00	0.01
	0.00	87.38	0.00	0.48	0.48	1.15	0.22	-0.70
4	21.15		1.52	-0.02	-0.92	0.00	0.00	0.01
	4.07	0.83E+06	1.52	-0.13	-0.92	0.00	0.00	0.01
	0.00	86.87	0.00	0.48	0.48	1.24	0.28	-0.70
5	21.15		1.64	0.03	-0.95	0.00	0.00	0.01
	6.02	0.83E+06	1.63	-0.14	-0.95	0.00	0.00	0.01
	0.00	86.35	0.00	0.48	0.48	1.35	0.30	-0.82
6	21.04		1.78	0.10	-0.98	0.00	0.00	0.00
	8.08	0.83E+06	1.77	-0.16	-0.98	0.00	0.00	0.00
	0.00	87.01	0.00	0.49	0.49	1.46	0.38	-0.85
7	20.92		1.91	0.16	-1.02	0.00	0.00	0.00
	10.05	0.83E+06	1.91	-0.16	-1.02	0.00	0.00	0.00
	0.00	87.28	0.00	0.47	0.47	1.60	0.42	-0.88
8	20.81		2.07	0.26	-1.07	0.00	0.00	0.01
	12.01	0.83E+06	2.06	-0.17	-1.07	0.00	0.00	0.01
	0.00	86.99	0.00	0.48	0.48	1.75	0.50	-0.94
9	21.04		2.18	0.35	-1.08	0.00	0.00	0.00
	14.02	0.83E+06	2.20	-0.19	-1.08	0.00	0.00	0.00
	0.00	86.66	0.00	0.47	0.47	1.86	0.57	-0.96
10	20.92		2.31	0.45	-1.12	0.00	0.00	0.01
	16.02	0.83E+06	2.34	-0.21	-1.12	0.00	0.00	0.01
	0.00	86.75	0.00	0.47	0.47	1.96	0.66	-1.00
11	20.88		2.42	0.55	-1.14	0.00	0.00	0.01
	18.03	0.82E+06	2.47	-0.22	-1.14	0.00	0.00	0.01
	0.00	87.59	0.00	0.48	0.48	2.08	0.76	-1.01
12	20.81		2.51	0.66	-1.16	0.00	0.00	0.01
	20.01	0.83E+06	2.59	-0.24	-1.16	0.00	0.00	0.01
	0.00	91.14	0.00	0.48	0.48	2.17	0.85	-1.03
13	20.88		2.83	0.81	-1.18	0.00	0.00	0.00
	22.18	0.83E+06	2.74	-0.25	-1.19	0.00	0.00	0.00
	0.00	99.00	0.00	0.48	0.48	2.27	0.98	-1.06

PROPULSIVE WING FORCE DATA

SUMMARY, RUN 237

PT	Q ALPHA BETA	REY NO HEIGHT	CL1S CNF1B CNUC	CD1S CAF1B CNUM	CPM1S CPM1B CMUT	CMM1S CMM1B CLTR	CYM1S CYM1B CDTR	CSF1S CSF1B CNTR
2	10.46		1.54	-0.42	-1.08	0.00	0.00	0.02
	-1.99	0.60E+06	1.56	-0.37	-1.06	0.00	0.00	0.02
	0.00	81.23	0.00	0.95	0.95	1.06	0.18	-
3	10.58		1.87	-0.37	-1.13	0.00	0.00	0.01
	0.00	0.60E+06	1.87	-0.37	-1.13	0.00	0.00	0.01
	0.00	88.38	0.00	0.95	0.95	1.15	0.22	-0.07
4	10.09		1.79	-0.31	-1.15	0.01	0.00	0.02
	2.02	0.60E+06	1.78	-0.37	-1.15	0.01	0.00	0.02
	0.00	87.46	0.00	0.94	0.94	1.26	0.26	-0.08
5	10.46		1.93	-0.25	-1.19	0.00	0.00	0.00
	3.99	0.60E+06	1.90	-0.38	-1.19	0.01	0.00	0.00
	0.00	87.38	0.00	0.94	0.94	1.37	0.30	-0.03
6	10.58		2.04	-0.18	-1.22	0.01	0.00	0.00
	6.02	0.60E+06	2.01	-0.39	-1.22	0.01	0.00	0.00
	0.00	87.83	0.00	0.93	0.93	1.47	0.35	-0.07
7	10.46		2.20	-0.10	-1.27	0.01	0.00	-0.01
	8.00	0.60E+06	2.18	-0.41	-1.27	0.01	0.00	-0.01
	0.00	88.26	0.00	0.94	0.94	1.60	0.41	-1.01
8	10.58		2.33	-0.02	-1.30	0.00	0.00	-0.01
	10.00	0.60E+06	2.29	-0.42	-1.30	0.00	0.00	-0.01
	0.00	89.14	0.00	0.92	0.92	1.72	0.47	-1.04
9	10.58		2.45	0.00	-1.33	0.00	0.00	0.00
	11.99	0.60E+06	2.42	-0.42	-1.33	0.01	0.00	0.00
	0.00	89.59	0.00	0.90	0.90	1.84	0.55	-1.08
10	10.58		2.62	0.20	-1.36	0.01	0.00	0.00
	13.99	0.60E+06	2.58	-0.44	-1.36	0.01	0.00	0.00
	0.00	89.21	0.00	0.91	0.91	1.98	0.64	-1.11
11	10.46		2.77	0.30	-1.41	0.01	0.00	-0.01
	16.00	0.60E+06	2.74	-0.47	-1.41	0.01	0.06	-0.01
	0.00	90.05	0.00	0.93	0.93	2.10	0.73	-1.15
12	10.58		2.86	0.42	-1.41	0.00	0.00	-0.01
	18.00	0.60E+06	2.85	-0.48	-1.41	0.00	0.00	-0.01
	0.00	87.53	0.00	0.92	0.92	2.18	0.82	-1.16
13	10.58		2.96	0.55	-1.44	0.01	0.00	-0.01
	19.99	0.60E+06	2.97	-0.49	-1.44	0.01	0.00	-0.01
	0.00	91.47	0.00	0.92	0.92	2.28	0.93	-1.19
14	10.58		3.06	0.60	-1.46	0.01	0.00	-0.01
	22.01	0.60E+06	3.00	-0.51	-1.46	0.01	0.00	-0.01
	0.00	98.86	0.00	0.92	0.92	2.36	1.04	-1.20

PROPULSIVE WING FORCE DATA

SUMMARY, RUN 238

PT	Q ALPHA BETA	REY NO HEIGHT	CL1S CNF1B CNUC	CD1S CAF1B CNUM	CPM1S CPM1B CMUT	CMM1S CMM1B CLTR	CYM1S CYM1B CDTR	CSF1S CSF1B CNTR
1	5.40		2.01	-0.95	-1.47	0.01	0.01	-0.01
	-2.00	0.43E+06	2.04	-0.88	-1.47	0.01	0.01	-0.01
	0.00	83.08	0.00	1.74	1.74	1.00	0.22	-0.97
2	5.52		2.10	-0.88	-1.47	0.01	0.00	0.00
	-0.01	0.43E+06	2.10	-0.88	-1.47	0.01	0.00	0.00
	0.00	88.70	0.00	1.71	1.71	1.13	0.26	-0.99
3	5.52		2.25	-0.79	-1.51	0.01	0.01	-0.02
	2.00	0.43E+06	2.22	-0.87	-1.51	0.01	0.01	-0.02
	0.00	91.02	0.00	1.73	1.73	1.23	0.29	-1.02
4	5.40		2.43	-0.73	-1.60	0.01	0.00	-0.02
	4.00	0.43E+06	2.38	-0.90	-1.60	0.01	0.00	-0.02
	0.00	87.81	0.00	1.76	1.76	1.36	0.34	-1.10
5	5.40		2.57	-0.65	-1.62	0.01	0.00	-0.03
	5.99	0.43E+06	2.48	-0.91	-1.62	0.01	0.01	-0.03
	0.00	88.00	0.00	1.77	1.77	1.45	0.38	-1.12
6	5.40		2.78	-0.55	-1.68	0.01	0.01	-0.04
	8.01	0.43E+06	2.68	-0.93	-1.68	0.01	0.01	-0.04
	0.00	88.75	0.00	1.78	1.78	1.60	0.45	-1.18
7	5.29		2.95	-0.46	-1.74	0.01	0.00	-0.05
	9.99	0.42E+06	2.83	-0.96	-1.74	0.01	0.00	-0.05
	0.00	88.50	0.00	1.81	1.81	1.73	0.52	-1.23
8	5.17		3.10	-0.34	-1.85	0.01	0.00	-0.05
	12.00	0.42E+06	3.05	-1.00	-1.85	0.01	0.00	-0.05
	0.00	88.63	0.00	1.85	1.85	1.91	0.62	-1.33
9	5.17		3.36	-0.20	-1.87	0.01	0.00	-0.06
	13.99	0.42E+06	3.21	-1.01	-1.87	0.01	0.01	-0.06
	0.00	85.49	0.00	1.88	1.88	2.05	0.71	-1.34
10	5.17		3.51	-0.06	-1.90	0.01	0.00	-0.06
	16.00	0.42E+06	3.36	-1.03	-1.90	0.01	0.00	-0.06
	0.00	88.93	0.00	1.85	1.85	2.16	0.81	-1.38
11	5.29		3.62	0.10	-1.90	0.01	0.00	-0.07
	18.00	0.42E+06	3.47	-1.02	-1.90	0.01	0.00	-0.07
	0.00	88.94	0.00	1.80	1.80	2.26	0.90	-1.39
12	5.17		3.79	0.28	-1.87	0.01	0.00	-0.07
	19.98	0.42E+06	3.65	-1.06	-1.87	0.01	0.01	-0.07
	0.00	91.67	0.00	1.84	1.84	2.30	1.03	-1.44
13	5.06		3.94	0.41	-2.00	0.01	0.00	-0.08
	21.99	0.42E+06	3.80	-1.10	-2.00	0.01	0.00	-0.08
	0.00	99.02	0.00	1.91	1.91	2.47	1.15	-1.46

PROPULSIVE WING FORCE DATA

SUMMARY, RUN 239

PT	Q ALPHA BETA	REY NO HEIGHT	CL1S CRF1B CRUC	CD1S CAF1B CRUW	CPM1S CPM1B CRUT	CRM1S CRM1B CLTR	CYM1S CYM1B CDTR	CSF1S CSF1B CNTR
1	2.53		3.12	-2.19	-2.34	0.01	-0.01	0.00
	-1.99	0.29E+06	3.20	-2.08	-2.34	0.01	-0.01	0.00
	0.00	82.78	0.00	3.70	3.70	1.10	0.29	-1.29
2	2.53		3.28	-2.10	-2.39	0.00	0.01	-0.04
	-0.01	0.29E+06	3.28	-2.10	-2.39	0.00	0.01	-0.04
	0.00	89.79	0.00	3.71	3.71	1.16	0.32	-1.33
3	2.53		3.50	-1.96	-2.43	0.01	0.01	-0.07
	2.02	0.29E+06	3.43	-2.10	-2.43	0.01	0.01	-0.07
	0.00	87.63	0.00	3.72	3.72	1.30	0.34	-1.37
4	2.53		3.78	-1.85	-2.50	0.01	0.01	-0.06
	4.00	0.29E+06	3.64	-2.11	-2.50	0.01	0.01	-0.06
	0.00	88.32	0.00	3.72	3.72	1.48	0.44	-1.44
5	2.85		3.72	-1.68	-2.48	0.01	0.01	-0.10
	6.00	0.30E+06	3.52	-2.06	-2.48	0.01	0.01	-0.10
	0.00	87.54	0.00	3.61	3.61	1.43	0.44	-1.46
6	2.85		3.80	-1.56	-2.57	0.01	0.01	-0.09
	8.00	0.30E+06	3.55	-2.07	-2.57	0.01	0.01	-0.09
	0.00	86.85	0.00	3.62	3.62	1.43	0.48	-1.55
7	2.85		4.14	-1.38	-2.58	0.01	0.01	-0.10
	10.02	0.30E+06	3.84	-2.06	-2.58	0.01	0.01	-0.10
	0.00	86.05	0.00	3.63	3.63	1.68	0.58	-1.55
8	2.53		4.48	-1.28	-2.75	0.01	0.01	-0.14
	12.00	0.29E+06	4.11	-2.19	-2.75	0.01	0.02	-0.14
	0.00	85.22	0.00	3.80	3.80	1.85	0.68	-1.68
9	2.53		4.71	-1.09	-2.72	0.01	0.01	-0.11
	14.01	0.29E+06	4.30	-2.20	-2.72	0.01	0.01	-0.11
	0.00	85.74	0.00	3.80	3.80	2.01	0.79	-1.84
10	2.85		4.80	-0.86	-2.70	0.01	0.00	-0.13
	16.02	0.30E+06	4.24	-2.11	-2.70	0.01	0.01	-0.13
	0.00	86.52	0.00	3.84	3.84	2.02	0.84	-1.67
11	2.85		4.82	-0.64	-2.77	0.02	0.00	-0.12
	18.01	0.30E+06	4.38	-2.10	-2.77	0.02	0.01	-0.12
	0.00	87.45	0.00	3.57	3.57	2.17	0.94	-1.76
12	2.85		4.88	-0.42	-2.87	0.02	0.01	-0.17
	20.01	0.30E+06	4.44	-2.06	-2.87	0.02	0.02	-0.17
	0.00	91.82	0.00	3.48	3.48	2.23	1.04	-1.63
13	2.85		5.19	-0.16	-2.78	0.02	0.00	-0.12
	21.99	0.30E+06	4.76	-2.10	-2.78	0.02	0.00	-0.12
	0.00	99.06	0.00	3.54	3.54	2.46	1.23	-1.78

PROPULSIVE WING FORCE DATA

SUMMARY, RUN 240

PT	Q ALPHA BETA	REY NO HEIGHT	CL1S CRF1B CRUC	CD1S CAF1B CRUW	CPM1S CPM1B CRUT	CRM1S CRM1B CLTR	CYM1S CYM1B CDTR	CSF1S CSF1B CNTR
1	1.38		4.07	-4.30	-3.82	0.02	0.03	-0.14
	-2.01	0.22E+06	4.02	-4.14	-3.82	0.02	0.03	-0.14
	0.00	82.06	0.00	6.88	6.88	0.92	0.31	-1.07
2	1.38		4.03	-4.00	-3.82	0.03	0.03	-0.14
	-0.02	0.22E+06	4.03	-4.00	-3.82	0.03	0.03	-0.14
	0.00	88.09	0.00	6.86	6.86	1.03	0.37	-1.06
3	1.38		5.07	-3.94	-3.87	0.03	0.06	-0.17
	2.02	0.22E+06	4.03	-4.11	-3.87	0.03	0.05	-0.17
	0.00	88.33	0.00	6.85	6.85	1.02	0.39	-1.73
4	1.38		5.36	-3.76	-3.81	0.03	0.04	-0.15
	4.01	0.22E+06	5.06	-4.12	-3.81	0.03	0.04	-0.15
	0.00	88.06	0.00	6.87	6.87	1.14	0.44	-1.86
5	1.38		5.72	-3.53	-3.88	0.03	0.04	-0.13
	6.01	0.22E+06	5.32	-4.11	-3.88	0.03	0.05	-0.13
	0.00	86.86	0.00	6.87	6.87	1.37	0.51	-1.94
6	1.38		5.88	-3.33	-3.98	0.04	0.03	-0.11
	8.00	0.22E+06	5.36	-4.11	-3.98	0.03	0.03	-0.11
	0.00	86.07	0.00	6.93	6.93	1.38	0.56	-2.04
7	1.38		6.18	-3.13	-4.02	0.03	0.02	-0.13
	10.01	0.22E+06	5.54	-4.16	-4.02	0.03	0.03	-0.13
	0.00	85.38	0.00	6.94	6.94	1.52	0.62	-2.07
8	1.38		6.42	-2.88	-4.06	0.04	0.04	-0.18
	11.98	0.22E+06	5.86	-4.15	-4.06	0.03	0.04	-0.18
	0.00	85.09	0.00	6.88	6.88	1.67	0.68	-2.12
9	1.38		6.68	-2.63	-4.07	0.04	0.03	-0.21
	14.02	0.22E+06	5.86	-4.15	-4.07	0.03	0.04	-0.21
	0.00	82.43	0.00	6.89	6.89	1.80	0.77	-2.12
10	1.38		6.88	-2.36	-4.15	0.04	0.02	-0.17
	16.01	0.22E+06	5.96	-4.17	-4.15	0.03	0.03	-0.17
	0.00	82.88	0.00	6.90	6.90	1.88	0.86	-2.21
11	1.38		7.13	-2.10	-4.13	0.05	0.05	-0.20
	18.01	0.22E+06	6.13	-4.20	-4.13	0.03	0.06	-0.30
	0.00	84.91	0.00	6.92	6.92	2.02	0.96	-2.18
12	1.38		7.23	-1.86	-4.22	0.04	0.03	-0.26
	20.00	0.22E+06	6.16	-4.22	-4.22	0.03	0.04	-0.26
	0.00	91.83	0.00	6.96	6.96	2.01	1.02	-2.27
13	1.38		7.51	-1.52	-4.22	0.06	0.05	-0.29
	21.99	0.22E+06	6.40	-4.22	-4.22	0.03	0.06	-0.29
	0.00	99.14	0.00	6.95	6.95	2.18	1.18	-2.27

PROPULSIVE WING FORCE DATA

SUMMARY, RUN 241

PT	Q ALPHA BETA	REY NO HEIGHT	CL1S CNF1B CNUC	CD1S CAF1B CNUN	CPN1S CPN1B CNUT	CMN1S CMN1B CLTR	CYN1S CYN1B CDTR	CSF1S CSF1B CNTR
15	0.00		21.72	-26.86	-212.00	-6.32	2.04	1.94
	0.01	0.30E+06	21.71	-26.87	-212.00	-6.32	2.03	1.94
	0.00	91.78	0.00	13.90	13.90	18.97	-24.14	-211.00
17	0.00		34.51	-45.87	-334.90	-12.22	-1.40	2.90
	0.03	0.30E+06	34.48	-45.88	-334.90	-12.22	-1.41	2.90
	0.00	91.78	0.00	67.87	67.87	13.82	-20.71	-324.40
18	0.00		55.19	-87.98	-515.70	-12.18	7.10	3.48
	0.04	0.30E+06	55.14	-88.00	-515.70	-12.18	7.08	3.48
	0.00	91.78	0.00	110.10	110.10	17.27	-22.78	-486.80
19	0.00		75.48	-93.72	-701.80	-14.81	-4.13	4.52
	0.06	0.30E+06	75.38	-93.80	-701.80	-14.81	-4.14	4.52
	0.00	91.78	0.00	154.50	154.50	20.38	-29.54	-674.30
20	0.00		101.50	-124.40	-883.70	-38.33	3.57	3.33
	0.08	0.30E+06	101.40	-124.50	-883.70	-38.34	3.52	3.33
	0.00	91.78	0.00	205.80	205.80	28.03	-41.40	-847.40

PROPULSIVE WING FORCE DATA

SUMMARY, RUN 242

PT	Q ALPHA BETA	REY NO HEIGHT	CL1S CNF1B CNUC	CD1S CAF1B CNUN	CPN1S CPN1B CNUT	CMN1S CMN1B CLTR	CYN1S CYN1B CDTR	CSF1S CSF1B CNTR
3	0.00		59.33	-73.46	-532.00	-19.83	1.05	3.02
	0.05	0.30E+06	59.26	-73.52	-532.00	-19.83	1.03	3.02
	0.00	91.98	43.03	78.00	121.10	0.07	-1.40	-533.20
4	0.00		83.78	-102.20	-746.10	-26.00	12.90	1.83
	0.07	0.30E+06	83.88	-102.30	-746.10	-26.00	12.87	1.83
	0.00	91.99	59.74	108.50	168.30	0.07	-1.00	-744.00
5	0.00		102.00	-125.20	-971.20	-30.22	-4.07	2.00
	0.08	0.30E+06	101.80	-125.40	-971.20	-30.22	-5.03	2.00
	0.00	91.99	74.04	134.20	208.30	1.07	-2.30	-987.70

PROPULSIVE WING FORCE DATA

SUMMARY, RUN 243

PT	Q ALPHA BETA	REY NO HEIGHT	CLIS CNFIB CNUC	CDIS CAFIB CNUM	CPMIS CPMIB CNUT	CNMIS CNMIB CLTR	CYMIS CYMIB CDTR	CSFIS CSFIB CNTR
2	30.12		0.38	0.08	-0.14	0.00	0.00	0.01
	-2.01	0.99E+06	0.35	0.10	-0.14	0.00	0.00	0.01
	0.00	81.21	0.00	0.00	0.00	0.36	0.12	-0.16
3	30.12		0.47	0.11	-0.13	0.00	0.00	0.01
	0.01	0.99E+06	0.47	0.11	-0.13	0.00	0.00	0.01
	0.00	88.00	0.00	0.00	0.00	0.47	0.14	-0.15
4	29.88		0.56	0.13	-0.11	0.00	0.00	0.01
	1.99	0.99E+06	0.57	0.11	-0.11	0.00	0.00	0.01
	0.00	86.22	0.00	0.00	0.00	0.56	0.15	-0.12
5	30.00		0.67	0.15	-0.09	0.00	0.00	0.01
	4.02	0.99E+06	0.68	0.10	-0.09	0.00	0.00	0.01
	0.00	85.03	0.00	0.00	0.00	0.67	0.18	-0.11
6	30.23		0.80	0.18	-0.08	0.00	0.00	0.00
	6.02	0.99E+06	0.81	0.10	-0.08	0.00	0.00	0.00
	0.00	84.18	0.00	0.00	0.00	0.79	0.21	-0.11
7	30.12		1.01	0.24	-0.11	0.00	0.00	0.00
	7.99	0.99E+06	1.03	0.10	-0.11	0.00	0.00	0.00
	0.00	84.97	0.00	0.00	0.00	1.01	0.27	-0.12
8	30.00		1.14	0.29	-0.08	0.00	0.00	0.00
	10.00	0.99E+06	1.17	0.09	-0.08	0.00	0.00	0.00
	0.00	83.26	0.00	0.00	0.00	1.13	0.32	-0.09
9	30.12		1.16	0.32	-0.01	0.00	-0.01	0.00
	12.01	0.99E+06	1.21	0.07	-0.01	0.00	0.00	0.00
	0.00	83.97	0.00	0.00	0.00	1.18	0.35	-0.03
10	30.12		1.38	0.42	-0.04	0.00	0.00	0.00
	14.03	0.99E+06	1.44	0.07	-0.04	0.00	0.00	0.00
	0.00	85.34	0.00	0.00	0.00	1.37	0.45	-0.06
11	30.12		1.48	0.49	0.00	0.00	0.00	0.00
	15.99	0.99E+06	1.54	0.07	0.00	0.00	0.00	0.00
	0.00	86.25	0.00	0.00	0.00	1.45	0.52	-0.02
12	30.12		1.62	0.60	-0.09	0.00	0.00	0.00
	18.02	0.99E+06	1.72	0.07	-0.09	0.00	0.00	0.00
	0.00	87.85	0.00	0.00	0.00	1.61	0.63	-0.10
13	30.00		1.69	0.68	-0.11	0.00	0.00	0.01
	19.99	0.99E+06	1.92	0.06	-0.11	0.00	0.00	0.01
	0.00	87.78	0.00	0.00	0.00	1.67	0.71	-0.13
14	30.00		1.77	0.78	-0.11	0.00	0.00	-0.01
	21.99	0.99E+06	1.94	0.06	-0.11	0.00	0.00	-0.01
	0.00	84.43	0.00	0.00	0.00	1.78	0.81	-0.13

PROPULSIVE WING FORCE DATA

SUMMARY, RUN 244

PT	Q ALPHA BETA	REY NO HEIGHT	CLIS CNFIB CNUC	CDIS CAFIB CNUM	CPMIS CPMIB CNUT	CNMIS CNMIB CLTR	CYMIS CYMIB CDTR	CSFIS CSFIB CNTR
1	21.04		1.00	-0.26	-0.25	0.01	0.00	0.01
	-2.01	0.83E+06	1.10	-0.22	-0.25	0.01	0.00	0.01
	0.00	81.87	0.26	0.46	0.72	0.76	0.18	-0.24
2	20.92		1.27	-0.22	-0.26	0.00	0.00	0.01
	0.00	0.83E+06	1.27	-0.22	-0.26	0.00	0.00	0.01
	0.00	88.57	0.26	0.47	0.73	0.91	0.21	-0.25
3	20.92		1.46	-0.16	-0.29	0.00	0.00	0.01
	2.02	0.83E+06	1.45	-0.21	-0.29	0.00	0.00	0.01
	0.00	87.44	0.26	0.47	0.73	1.00	0.26	-0.26
4	20.92		1.66	-0.00	-0.32	0.00	0.00	0.01
	4.02	0.83E+06	1.65	-0.21	-0.32	0.00	0.00	0.01
	0.00	86.14	0.26	0.47	0.73	1.26	0.32	-0.31
5	20.92		1.87	0.00	-0.33	0.01	0.00	0.00
	6.02	0.83E+06	1.86	-0.20	-0.33	0.01	0.00	0.00
	0.00	84.28	0.26	0.47	0.72	1.48	0.39	-0.32
6	20.92		2.08	0.11	-0.36	0.01	0.00	0.01
	8.02	0.83E+06	2.08	-0.18	-0.36	0.01	0.00	0.01
	0.00	85.12	0.25	0.46	0.71	1.68	0.46	-0.35
7	20.92		2.33	0.24	-0.37	0.00	0.00	0.01
	10.02	0.83E+06	2.33	-0.17	-0.37	0.01	0.00	0.01
	0.00	83.04	0.25	0.46	0.72	1.91	0.58	-0.36
8	21.04		2.51	0.36	-0.38	0.00	0.00	0.01
	11.98	0.83E+06	2.53	-0.17	-0.38	0.00	0.00	0.01
	0.00	84.75	0.25	0.46	0.71	2.08	0.70	-0.35
9	21.15		2.68	0.49	-0.34	0.00	0.00	0.00
	13.99	0.83E+06	2.72	-0.17	-0.34	0.00	0.00	0.00
	0.00	85.51	0.25	0.46	0.71	2.24	0.82	-0.33
10	21.04		2.85	0.63	-0.33	0.00	0.00	0.01
	15.98	0.83E+06	2.92	-0.16	-0.33	0.00	0.00	0.01
	0.00	87.12	0.25	0.46	0.71	2.40	0.95	-0.32
11	20.81		3.01	0.77	-0.30	0.00	0.00	0.00
	17.99	0.83E+06	3.10	-0.19	-0.30	0.00	0.00	0.00
	0.00	88.11	0.26	0.47	0.72	2.54	1.07	-0.29
12	21.04		3.12	0.92	-0.25	0.01	0.00	0.00
	20.00	0.83E+06	3.24	-0.20	-0.25	0.01	0.00	0.00
	0.00	88.52	0.25	0.46	0.71	2.64	1.20	-0.24
13	21.04		3.26	1.06	-0.24	0.01	0.00	-0.01
	22.01	0.83E+06	3.42	-0.22	-0.24	0.00	0.01	-0.01
	0.00	83.47	0.25	0.46	0.72	2.77	1.34	-0.23

PROPULSIVE WING FORCE DATA

SUMMARY, RUN 245

PT	Q ALPHA BETA	REY NO HEIGHT	CLIS CNFIB CNUC	CDIS CAFIB CNUM	CPMIS CPMIB CNUT	CRMIS CRMIB CLTR	CYMIS CYMIB CDTR	CSFIS CSFIB CNTR
2	10.58		1.40	-0.87	-0.28	0.00	-0.01	0.04
	-2.01	0.59E+06	1.43	-0.82	-0.29	0.00	-0.01	0.04
	0.00	78.80	0.51	0.92	1.43	0.74	0.20	-0.27
3	10.48		1.60	-0.82	-0.32	0.00	0.00	0.03
	0.00	0.58E+06	1.60	-0.82	-0.32	0.00	0.00	0.03
	0.00	85.80	0.51	0.93	1.45	0.88	0.24	-0.30
4	10.48		1.81	-0.55	-0.34	0.00	0.00	0.02
	2.01	0.58E+06	1.78	-0.82	-0.34	0.00	0.00	0.02
	0.00	86.28	0.51	0.94	1.45	1.07	0.28	-0.32
5	10.58		1.87	-0.48	-0.35	-0.01	0.00	0.01
	4.01	0.58E+06	1.93	-0.80	-0.35	-0.01	0.00	0.01
	0.00	85.04	0.51	0.93	1.44	1.21	0.34	-0.33
6	10.58		2.22	-0.37	-0.38	0.00	0.00	0.03
	6.61	0.58E+06	2.17	-0.80	-0.38	0.00	0.00	0.03
	0.00	84.88	0.51	0.93	1.44	1.43	0.41	-0.34
7	10.58		2.48	-0.25	-0.41	0.01	0.00	0.01
	8.02	0.58E+06	2.42	-0.80	-0.41	0.01	0.00	0.01
	0.00	85.35	0.51	0.94	1.45	1.88	0.50	-0.38
8	10.81		2.72	-0.08	-0.44	0.01	0.00	0.00
	10.02	0.58E+06	2.68	-0.56	-0.44	0.01	0.00	0.00
	0.00	84.43	0.49	0.88	1.38	1.90	0.81	-0.42
9	10.58		2.98	0.05	-0.45	0.02	0.00	-0.01
	12.00	0.59E+06	2.92	-0.57	-0.45	0.02	0.00	-0.01
	0.00	82.32	0.50	0.92	1.42	2.12	0.73	-0.43
10	10.48		3.23	0.22	-0.48	0.01	0.00	-0.01
	14.00	0.58E+06	3.18	-0.57	-0.48	0.01	0.00	-0.01
	0.00	81.32	0.51	0.93	1.44	2.33	0.88	-0.48
11	10.58		3.39	0.39	-0.46	0.01	-0.01	0.01
	16.00	0.58E+06	3.37	-0.56	-0.46	0.01	0.00	0.01
	0.00	79.75	0.50	0.92	1.42	2.48	1.02	-0.44
12	10.58		3.61	0.59	-0.46	0.01	0.01	-0.03
	18.00	0.59E+06	3.61	-0.56	-0.46	0.00	0.01	-0.03
	0.00	82.18	0.50	0.92	1.42	2.68	1.18	-0.44
13	10.48		3.81	0.78	-0.44	0.01	0.01	-0.02
	20.00	0.59E+06	3.85	-0.57	-0.44	0.00	0.01	-0.02
	0.00	89.42	0.50	0.93	1.43	2.85	1.35	-0.42
14	10.69		3.93	0.98	-0.39	0.01	0.01	-0.02
	22.03	0.59E+06	4.01	-0.56	-0.39	0.01	0.01	-0.02
	0.00	98.51	0.50	0.91	1.41	2.97	1.50	-0.38

PROPULSIVE WING FORCE DATA

SUMMARY, RUN 246

PT	Q ALPHA BETA	REY NO HEIGHT	CLIS CNFIB CNUC	CDIS CAFIB CNUM	CPMIS CPMIB CNUT	CRMIS CRMIB CLTR	CYMIS CYMIB CDTR	CSFIS CSFIB CNTR
1	5.17		2.11	-1.56	-0.56	-0.02	-0.02	0.00
	-1.99	0.41E+06	2.16	-1.49	-0.56	-0.02	-0.02	0.00
	0.00	82.94	1.02	1.89	2.91	0.74	0.22	-0.52
2	5.40		2.18	-1.41	-0.50	-0.01	-0.02	0.00
	0.01	0.42E+06	2.19	-1.41	-0.50	-0.01	-0.02	0.00
	0.00	89.92	0.98	1.81	2.79	0.82	0.26	-0.46
3	5.40		2.41	-1.32	-0.50	-0.01	-0.01	0.00
	2.00	0.42E+06	2.38	-1.41	-0.50	-0.01	-0.01	0.00
	0.00	89.74	0.98	1.80	2.78	0.98	0.28	-0.46
4	5.40		2.64	-1.23	-0.50	-0.02	-0.01	0.04
	4.00	0.42E+06	2.55	-1.41	-0.50	-0.02	-0.01	0.04
	0.00	88.40	0.98	1.81	2.79	1.15	0.34	-0.46
5	5.40		2.90	-1.10	-0.53	-0.01	0.00	0.01
	5.99	0.42E+06	2.76	-1.40	-0.53	-0.01	0.00	0.01
	0.00	85.64	0.98	1.81	2.79	1.35	0.42	-0.49
6	5.40		3.16	-0.97	-0.55	-0.01	0.00	0.01
	8.00	0.42E+06	3.00	-1.40	-0.55	-0.01	0.00	0.01
	0.00	84.01	0.98	1.82	2.84	1.57	0.50	-0.51
7	5.17		3.51	-0.86	-0.60	0.00	0.00	-0.01
	9.99	0.41E+06	3.30	-1.45	-0.60	0.00	0.00	-0.01
	0.00	85.18	1.02	1.90	2.92	1.78	0.62	-0.56
8	5.40		3.68	-0.63	-0.60	0.00	0.00	-0.02
	11.[illegible]	0.42E+06	3.46	-1.38	-0.60	0.00	0.00	-0.02
	0.00	88.43	0.98	1.82	2.81	1.98	0.72	-0.56
9	5.29		3.92	-0.43	-0.58	0.01	0.00	-0.02
	14.00	0.42E+06	3.70	-1.36	-0.58	0.01	0.00	-0.02
	0.00	87.11	0.97	1.81	2.78	2.18	0.88	-0.55
10	5.17		4.31	-0.23	-0.65	0.01	0.00	-0.04
	15.98	0.41E+06	4.08	-1.41	-0.65	0.01	0.01	-0.04
	0.00	87.55	1.01	1.87	2.88	2.47	1.03	-0.61
11	5.17		4.54	-0.02	-0.68	0.02	0.00	-0.05
	17.99	0.41E+06	4.31	-1.42	-0.68	0.02	0.01	-0.05
	0.00	88.74	1.01	1.88	2.89	2.85	1.19	-0.64
12	5.40		4.85	0.25	-0.85	0.02	-0.01	-0.04
	20.02	0.42E+06	4.45	-1.35	-0.85	0.03	0.00	-0.04
	0.00	90.70	0.97	1.80	2.77	2.80	1.34	-0.62
13	5.29		4.92	0.49	-0.85	0.02	0.00	-0.04
	22.00	0.42E+06	4.74	-1.38	-0.85	0.02	0.01	-0.04
	0.00	97.87	0.99	1.85	2.83	2.99	1.54	-0.61

PROPULSIVE WING FORCE DATA

SUMMARY, RUN 247

PT	Q ALPHA BETA	REY NO HEIGHT	CL1S CNF1B CNUC	CD1S CAF1B CNUW	CPM1S CPM1B CNUT	CNM1S CNM1B CLTR	CYM1S CYM1B CDTR	CSF1S CSF1B CNTR
1	2.53		3.60	-3.45	-1.08	-0.02	-0.02	0.10
	-1.99	0.29E+06	3.71	-3.33	-1.08	-0.02	-0.02	0.10
	0.00	82.39	2.07	3.86	5.94	0.79	0.20	-1.00
2	2.53		3.72	-3.31	-1.02	-0.02	-0.04	0.15
	0.01	0.29E+06	3.72	-3.31	-1.02	-0.02	-0.04	0.15
	0.00	89.40	2.08	3.87	5.95	0.79	0.25	-0.94
3	2.85		3.79	-3.03	-0.91	-0.04	-0.03	0.09
	2.00	0.30E+06	3.68	-3.18	-0.91	-0.04	-0.03	0.09
	0.00	89.83	1.99	3.70	5.69	0.86	0.29	-0.83
4	2.85		4.01	-2.87	-0.89	-0.04	-0.02	0.09
	4.01	0.30E+06	3.80	-3.14	-0.89	-0.03	-0.02	0.09
	0.00	87.82	1.98	3.70	5.68	0.96	0.34	-0.81
5	2.85		4.34	-2.70	-0.94	-0.03	-0.01	0.03
	6.01	0.30E+06	4.04	-3.14	-0.94	-0.03	-0.01	0.03
	0.00	88.03	1.99	3.71	5.70	1.19	0.40	-0.86
6	2.78		4.35	-2.43	-0.85	-0.04	-0.02	0.05
	7.99	0.30E+06	3.97	-3.01	-0.85	-0.04	-0.02	0.05
	0.00	87.60	1.91	3.55	5.45	1.22	0.43	-0.78
7	2.53		5.02	-2.47	-0.89	-0.02	-0.02	0.03
	9.99	0.29E+06	4.52	-3.30	-0.89	-0.02	-0.02	0.03
	0.00	89.22	2.09	3.88	5.97	1.50	0.55	-0.81
8	2.53		5.42	-2.21	-0.92	-0.01	-0.03	0.01
	11.99	0.29E+06	4.84	-3.29	-0.92	0.00	-0.03	0.01
	0.00	88.57	2.09	3.91	6.00	1.78	0.69	-0.84
9	2.65		5.57	-1.83	-0.94	-0.01	-0.01	-0.02
	14.00	0.30E+06	4.98	-3.12	-0.94	-0.01	-0.01	-0.02
	0.00	86.71	1.99	3.71	5.70	2.01	0.81	-0.86
10	2.65		5.75	-1.53	-0.89	-0.01	0.00	-0.07
	16.01	0.30E+06	5.10	-3.06	-0.89	-0.01	0.00	-0.07
	0.00	85.69	1.96	3.66	5.62	2.15	0.94	-0.81
11	2.65		5.97	-1.30	-0.85	-0.01	0.01	-0.08
	17.99	0.30E+06	5.27	-3.06	-0.85	-0.01	0.00	-0.08
	0.00	87.07	1.98	3.85	5.81	2.27	1.06	-0.78
12	2.53		6.51	-1.05	-0.97	-0.01	0.00	-0.07
	20.02	0.29E+06	5.76	-3.22	-0.97	-0.01	0.00	-0.07
	0.00	91.36	2.06	3.83	5.89	2.58	1.28	-0.89
13	2.53		7.01	-0.84	-1.09	0.00	0.01	-0.09
	22.00	0.29E+06	6.26	-3.22	-1.09	-0.01	0.00	-0.09
	0.00	98.57	2.07	3.88	5.92	2.97	1.56	-1.01

PROPULSIVE WING FORCE DATA

SUMMARY, RUN 248

PT	Q ALPHA BETA	REY NO HEIGHT	CL1S CNF1B CNUC	CD1S CAF1B CNUW	CPM1S CPM1B CNUT	CNM1S CNM1B CLTR	CYM1S CYM1B CDTR	CSF1S CSF1B CNTR
1	1.27		6.20	-7.20	-1.91	-0.04	-0.04	0.16
	-1.99	0.20E+06	6.45	-6.98	-1.91	-0.04	-0.04	0.16
	0.00	81.50	4.14	7.72	11.86	0.81	0.10	-1.75
2	1.27		6.59	-6.98	-1.93	-0.05	-0.03	0.13
	0.00	0.20E+06	6.59	-6.98	-1.83	-0.05	-0.03	0.13
	0.00	88.51	4.15	7.76	11.91	0.71	0.16	-1.77
3	1.49		5.87	-5.85	-1.83	-0.04	-0.05	0.15
	2.01	0.22E+06	5.87	-5.85	-1.83	-0.04	-0.05	0.15
	0.00	87.43	3.50	6.54	10.04	0.70	0.20	-1.50
4	1.38		6.77	-5.91	-1.70	-0.04	-0.05	0.10
	3.99	0.21E+06	6.34	-6.36	-1.70	-0.03	-0.05	0.10
	0.00	87.44	3.80	7.08	10.88	0.95	0.24	-1.56
5	1.38		6.92	-5.60	-1.80	-0.06	-0.03	0.04
	5.99	0.21E+06	6.29	-6.37	-1.80	-0.06	-0.04	0.04
	0.00	87.54	3.81	7.11	10.91	0.87	0.28	-1.54
6	1.38		7.18	-5.40	-1.57	-0.06	-0.03	0.04
	8.00	0.21E+06	6.36	-6.34	-1.57	-0.06	-0.04	0.04
	0.00	87.32	3.80	7.12	10.92	0.94	0.34	-1.42
7	1.27		8.05	-5.03	-1.68	-0.06	-0.04	0.01
	10.01	0.20E+06	6.95	-6.94	-1.69	-0.06	-0.06	0.01
	0.00	87.78	4.12	7.72	11.84	1.02	0.38	-1.53
8	1.38		7.78	-4.86	-1.49	-0.07	-0.03	-0.03
	11.99	0.21E+06	6.80	-6.38	-1.49	-0.07	-0.05	-0.03
	0.00	87.33	3.81	7.10	10.91	1.15	0.42	-1.34
9	1.38		8.19	-4.53	-1.81	-0.06	-0.03	-0.04
	14.00	0.21E+06	6.85	-6.38	-1.81	-0.07	-0.05	-0.04
	0.00	87.87	3.80	7.11	10.91	1.37	0.53	-1.46
10	1.38		8.51	-4.20	-1.48	-0.07	-0.05	-0.02
	16.00	0.21E+06	7.02	-6.38	-1.48	-0.06	-0.07	-0.02
	0.00	87.32	3.82	7.12	10.94	1.54	0.66	-1.33
11	1.38		9.25	-3.66	-1.87	-0.05	-0.03	-0.14
	18.00	0.21E+06	7.67	-6.34	-1.87	-0.04	-0.04	-0.14
	0.00	87.09	3.80	7.10	10.90	2.11	0.90	-1.72
12	1.27		10.22	-3.60	-1.81	-0.07	-0.07	0.02
	19.99	0.20E+06	8.37	-6.88	-1.81	-0.04	-0.06	0.02
	0.00	91.64	4.14	7.75	11.89	2.27	1.08	-1.86
13	1.27		10.35	-3.27	-1.70	-0.04	-0.03	-0.17
	21.99	0.20E+06	8.37	-6.91	-1.70	-0.02	-0.04	-0.17
	0.00	98.99	4.14	7.73	11.87	2.23	1.15	-1.94

PROPULSIVE WING FORCE DATA

SUMMARY, RUN 249

PT	Q ALPHA BETA	REY NO HEIGHT	CL1S CNF1B CNUC	CD1S CAF1B CNWW	CPM1S CPM1B CMUT	CMM1S CMM1B CLTR	CYM1S CYM1B CDTR	CSF1S CSF1B CNTR
16	0.00		-1.75	-0.06	6.80	-1.64	8.32	-1.10
	-0.01	0.30E+08	-1.75	-0.06	6.80	-1.64	8.32	-1.10
	0.00	88.16	10.82	0.00	10.82	-2.28	10.84	0.22
17	0.00		18.80	-25.20	408.00	-13.64	6.53	0.45
	6.97	0.30E+08	18.58	-25.22	408.00	-13.65	6.51	0.45
	0.00	88.16	41.73	0.00	41.73	-40.39	44.93	404.60
18	0.00		27.17	-36.10	581.60	-20.23	11.58	-0.78
	0.11	0.30E+08	27.10	-36.15	581.60	-20.26	11.55	-0.78
	0.00	88.16	61.17	0.00	61.17	-56.91	65.45	583.10
19	0.00		34.30	-44.31	730.60	-22.79	7.54	-0.08
	0.14	0.30E+08	34.19	-44.40	730.60	-22.81	7.49	-0.08
	0.00	88.16	77.99	0.00	77.99	-70.83	83.82	734.70

PROPULSIVE WING FORCE DATA

SUMMARY, RUN 250

PT	Q ALPHA BETA	REY NO HEIGHT	CL1S CNF1B CNUC	CD1S CAF1B CNWW	CPM1S CPM1B CMUT	CMM1S CMM1B CLTR	CYM1S CYM1B CDTR	CSF1S CSF1B CNTR
2	30.00		0.12	0.04	0.08	0.00	0.00	0.01
	-2.01	0.98E+08	0.12	0.04	0.08	0.00	0.00	0.01
	0.00	80.03	0.00	0.00	0.00	0.12	0.06	0.07
3	30.00		0.15	0.04	0.12	0.00	0.00	0.01
	-0.02	0.98E+08	0.15	0.04	0.12	0.00	0.00	0.01
	0.00	86.73	0.00	0.00	0.00	0.17	0.07	0.10
4	30.12		0.18	0.05	0.15	0.00	0.00	0.01
	1.89	0.98E+08	0.18	0.04	0.15	0.00	0.00	0.01
	0.00	83.78	0.00	0.00	0.00	0.18	0.07	0.14
5	30.00		0.23	0.05	0.19	0.00	0.00	0.01
	3.98	0.98E+08	0.23	0.04	0.19	0.00	0.00	0.01
	0.00	85.03	0.00	0.00	0.00	0.23	0.08	0.17
6	30.00		0.27	0.06	0.23	0.00	0.00	0.01
	6.00	0.98E+08	0.27	0.04	0.23	0.00	0.00	0.01
	0.00	84.58	0.00	0.00	0.00	0.28	0.08	0.21
7	29.89		0.31	0.08	0.27	0.00	0.00	0.01
	7.99	-.81E+08	0.32	0.03	0.27	0.00	0.00	0.01
	0.00	82.20	0.00	0.00	0.00	0.31	0.11	0.25
8	30.00		0.36	0.09	0.32	0.00	0.00	0.01
	10.02	-.12E+09	0.37	0.03	0.32	0.00	0.00	0.01
	0.00	81.18	0.00	0.00	0.00	0.35	0.12	0.30
9	30.00		0.39	0.11	0.36	0.00	0.00	0.00
	11.99	-.12E+09	0.41	0.03	0.36	0.00	0.00	0.00
	0.00	87.85	0.00	0.00	0.00	0.38	0.14	0.34
10	29.88		0.43	0.14	0.40	0.00	0.00	0.00
	13.99	-.18E+09	0.45	0.03	0.40	0.00	0.00	0.00
	0.00	85.89	0.00	0.00	0.00	0.42	0.17	0.38
11	29.77		0.48	0.17	0.42	0.00	0.00	0.01
	16.02	-.12E+09	0.49	0.03	0.42	0.00	0.00	0.01
	0.00	87.41	0.00	0.00	0.00	0.45	0.19	0.41
12	30.12		0.48	0.20	0.44	0.00	0.00	0.01
	17.97	-.61E+08	0.52	0.04	0.44	0.00	0.00	0.01
	0.00	85.89	0.00	0.00	0.00	0.47	0.23	0.42
13	30.12		0.42	0.20	0.39	0.00	-0.01	0.02
	19.97	0.98E+08	0.48	0.04	0.39	0.00	-0.01	0.02
	0.00	80.47	0.00	0.00	0.00	0.41	0.22	0.37
14	29.89		0.44	0.22	0.41	0.00	0.00	0.00
	21.98	0.98E+08	0.48	0.04	0.41	0.00	0.00	0.00
	0.00	85.14	0.00	0.00	0.00	0.43	0.25	0.39

PROPULSIVE WING FORCE DATA

SUMMARY, RUN 251

PT	Q ALPHA BETA	REY NO HEIGHT	CLIS CNFIB CNUC	CDIS CAFIB CNUW	CPNIS CPNIB CNUT	CRNIS CRNIB CLTR	CYNIS CYNIB CDTR	CSFIS CSFIB CNTR
1	20.92		0.45	-0.06	0.37	0.00	0.00	0.03
	-2.00	0.82E+06	0.46	-0.06	0.37	0.00	0.00	0.03
	0.00	83.29	0.27	0.00	0.27	0.35	0.08	0.29
2	21.15		0.49	-0.06	0.40	0.00	0.00	0.02
	-0.01	-.52E+08	0.49	-0.06	0.40	0.00	0.00	0.02
	0.00	90.10	0.25	0.00	0.25	0.38	0.09	0.33
3	21.04		0.54	-0.04	0.45	0.00	0.00	0.02
	2.00	0.82E+06	0.54	-0.06	0.45	0.00	0.00	0.02
	0.00	88.11	0.26	0.00	0.26	0.43	0.10	0.38
4	21.15		0.61	-0.02	0.49	0.00	0.00	0.02
	4.01	0.83E+06	0.60	-0.06	0.49	0.00	0.00	0.02
	0.00	87.54	0.26	0.00	0.26	0.49	0.12	0.42
5	21.15		0.67	0.01	0.54	0.00	0.00	0.02
	6.01	0.83E+06	0.67	-0.03	0.54	0.00	0.00	0.02
	0.00	87.41	0.26	0.00	0.26	0.55	0.14	0.47
6	21.04		0.74	0.04	0.59	0.00	0.00	0.02
	8.01	0.82E+06	0.74	-0.07	0.59	0.00	0.00	0.02
	0.00	85.70	0.26	0.00	0.26	0.61	0.17	0.52
7	21.04		0.81	0.07	0.64	0.00	0.00	0.02
	10.00	0.82E+06	0.81	-0.07	0.64	0.00	0.00	0.02
	0.00	83.88	0.26	0.00	0.26	0.67	0.20	0.57
8	21.15		0.87	0.11	0.69	0.00	0.00	0.02
	12.01	0.83E+06	0.87	-0.07	0.69	0.00	0.00	0.02
	0.00	83.38	0.26	0.00	0.26	0.73	0.23	0.62
9	20.92		0.93	0.15	0.75	0.00	0.00	0.03
	13.99	0.82E+06	0.94	-0.07	0.75	0.00	0.00	0.03
	0.00	81.15	0.26	0.00	0.26	0.78	0.27	0.68
10	20.92		0.99	0.20	0.80	0.00	-0.01	0.03
	16.00	0.82E+06	1.00	-0.08	0.80	0.00	-0.01	0.03
	0.00	85.11	0.26	0.00	0.26	0.84	0.31	0.73
11	21.04		1.02	0.24	0.85	0.00	0.00	0.02
	18.00	0.82E+06	1.05	-0.08	0.85	0.00	0.00	0.02
	0.00	86.81	0.26	0.00	0.26	0.87	0.35	0.78
12	21.15		1.08	0.30	0.89	0.00	0.00	0.03
	19.99	-.16E+09	1.12	-0.09	0.89	0.00	0.00	0.03
	0.00	86.86	0.25	0.00	0.25	0.93	0.40	0.82
13	21.04		1.14	0.36	0.94	0.00	0.00	0.03
	21.99	0.82E+06	1.19	-0.09	0.94	0.00	-0.01	0.03
	0.00	92.64	0.26	0.00	0.26	0.98	0.46	0.87

PROPULSIVE WING FORCE DATA

SUMMARY, RUN 252

PT	Q ALPHA BETA	REY NO HEIGHT	CLIS CNFIB CNUC	CDIS CAFIB CNUW	CPNIS CPNIB CNUT	CRNIS CRNIB CLTR	CYNIS CYNIB CDTR	CSFIS CSFIB CNTR
1	10.58		0.59	-0.22	0.48	0.00	0.00	0.03
	-2.01	0.59E+06	0.60	-0.20	0.48	0.00	0.00	0.03
	0.00	80.47	0.52	0.00	0.52	0.38	0.08	0.34
2	10.46		0.66	-0.20	0.53	0.00	0.00	0.03
	-0.01	0.56E+06	0.66	-0.20	0.53	0.00	0.00	0.03
	0.00	87.36	0.53	0.00	0.53	0.44	0.10	0.38
3	10.58		0.70	-0.17	0.57	0.00	0.00	0.02
	2.00	-.15E+09	0.69	-0.20	0.57	0.00	0.00	0.02
	0.00	86.67	0.52	0.00	0.52	0.47	0.11	0.43
4	10.58		0.77	-0.14	0.63	0.00	0.00	0.02
	4.01	0.59E+06	0.76	-0.20	0.63	0.00	0.00	0.02
	0.00	84.74	0.51	0.00	0.51	0.53	0.14	0.48
5	10.58		0.83	-0.11	0.68	0.00	0.00	0.03
	5.99	-.37E+06	0.81	-0.20	0.68	0.00	0.00	0.03
	0.00	85.09	0.51	0.00	0.51	0.58	0.16	0.54
6	10.46		0.92	-0.08	0.74	0.00	0.00	0.02
	7.99	0.58E+06	0.90	-0.20	0.74	0.00	0.00	0.02
	0.00	86.16	0.52	0.00	0.52	0.66	0.19	0.59
7	10.46		1.00	-0.03	0.79	0.00	0.00	0.01
	10.01	0.58E+06	0.98	-0.21	0.79	0.00	0.00	0.01
	0.00	86.86	0.52	0.00	0.52	0.73	0.22	0.64
8	10.58		1.07	0.02	0.83	0.00	0.00	0.02
	12.00	0.59E+06	1.05	-0.21	0.83	0.00	0.00	0.02
	0.00	86.75	0.52	0.00	0.52	0.79	0.26	0.68
9	10.58		1.14	0.07	0.87	0.00	0.00	0.03
	14.00	0.59E+06	1.13	-0.21	0.87	0.00	-0.01	0.03
	0.00	88.16	0.52	0.00	0.52	0.86	0.30	0.73
10	10.46		1.23	0.13	0.93	0.00	-0.01	0.05
	15.98	0.58E+06	1.22	-0.22	0.93	0.00	-0.01	0.05
	0.00	88.96	0.53	0.00	0.53	0.94	0.36	0.79
11	10.58		1.28	0.18	0.98	0.00	-0.01	0.04
	17.99	0.59E+06	1.27	-0.22	0.98	0.00	-0.01	0.04
	0.00	90.64	0.52	0.00	0.52	0.98	0.40	0.83
12	10.46		1.34	0.24	1.04	-0.01	-0.01	0.04
	18.98	0.58E+06	1.35	-0.23	1.04	0.00	-0.01	0.04
	0.00	89.29	0.52	0.00	0.52	1.03	0.45	0.88
13	10.58		1.41	0.32	1.08	0.00	-0.01	0.04
	21.99	0.59E+06	1.43	-0.23	1.08	0.00	-0.01	0.04
	0.00	95.31	0.52	0.00	0.52	1.10	0.51	0.94

PROPULSIVE WING FORCE DATA

SUMMARY. RUN 253

PT	Q ALPHA BETA	REY NO HEIGHT	CL1S CRF1B CRUC	CD1S CAF1B CRUW	CPR1S CPR1B CRUT	CBR1S CBR1B CLTR	CYR1S CYR1B CDTR	CSF1S CSF1B CNTR
1	5.40		0.85	-0.51	0.85	0.00	0.00	0.05
	-2.00	0.42E+06	0.88	-0.48	0.85	0.00	0.00	0.05
	0.00	80.70	1.01	0.00	1.01	0.44	0.08	0.37
2	5.52		0.91	-0.48	0.70	0.00	0.01	0.03
	-0.01	0.43E+06	0.91	-0.48	0.70	0.00	0.01	0.03
	0.00	87.72	0.99	0.00	0.99	0.40	0.11	0.42
3	5.83		0.95	-0.42	0.74	0.00	0.00	0.02
	2.04	0.43E+06	0.94	-0.48	0.74	0.00	0.00	0.02
	0.00	80.74	0.96	0.00	0.96	0.52	0.12	0.48
4	5.40		1.07	-0.40	0.83	0.00	0.00	0.02
	4.00	0.42E+06	1.04	-0.48	0.83	0.00	0.00	0.02
	0.00	87.60	1.01	0.00	1.01	0.00	0.14	0.95
5	5.40		1.14	-0.38	0.90	0.00	0.01	0.02
	6.00	0.42E+06	1.06	-0.47	0.90	0.00	0.01	0.02
	0.00	87.47	1.02	0.00	1.02	0.85	0.18	0.82
6	5.52		1.18	-0.30	0.94	0.00	0.01	0.00
	8.04	-.27E+06	1.13	-0.47	0.94	0.00	0.01	0.00
	0.00	80.39	0.90	0.00	0.90	0.80	0.20	0.87
7	5.52		1.25	-0.35	1.00	0.00	0.00	0.02
	10.02	0.43E+06	1.18	-0.46	1.00	0.00	0.00	0.02
	0.00	87.85	0.00	0.00	0.00	0.74	0.24	0.72
8	5.52		1.36	-0.18	1.04	0.00	0.00	0.02
	12.00	0.43E+06	1.29	-0.47	1.04	0.00	0.00	0.02
	0.00	87.57	0.99	0.00	0.99	0.83	0.28	0.77
9	5.20		1.48	-0.14	1.13	-0.01	0.00	0.02
	14.02	0.42E+06	1.40	-0.40	1.13	-0.01	0.00	0.02
	0.00	88.78	1.04	0.00	1.04	0.91	0.33	0.84
10	5.52		1.52	-0.05	1.13	0.00	0.00	0.03
	16.00	0.43E+06	1.45	-0.47	1.13	0.00	0.00	0.03
	0.00	87.78	0.99	0.00	0.99	0.96	0.36	0.85
11	5.20		1.68	0.02	1.21	-0.01	0.00	0.03
	18.01	-.78E+06	1.60	-0.40	1.21	0.00	0.00	0.03
	0.00	87.97	1.04	0.00	1.04	1.08	0.45	0.93
12	5.40		1.68	0.08	1.23	-0.01	0.00	0.02
	20.03	-.28E+06	1.60	-0.50	1.23	-0.01	0.00	0.02
	0.00	88.97	1.01	0.00	1.01	1.08	0.48	0.95
13	5.40		1.75	0.17	1.27	-0.01	0.00	0.04
	22.03	-.11E+06	1.68	-0.50	1.27	-0.01	-0.01	0.04
	0.00	97.28	1.02	0.00	1.02	1.14	0.55	0.99

PROPULSIVE WING FORCE DATA

SUMMARY. RUN 254

PT	Q ALPHA BETA	REY NO HEIGHT	CL1S CRF1B CRUC	CD1S CAF1B CRUW	CPR1S CPR1B CRUT	CBR1S CBR1B CLTR	CYR1S CYR1B CDTR	CSF1S CSF1B CNTR
3	0.00		13.03	-26.03	-299.30	-2.00	-4.03	0.02
	0.00	0.30E+06	13.03	-26.02	-299.30	-2.01	-4.03	0.02
	0.00	88.78	0.00	10.01	10.01	10.13	-21.90	-302.90
4	0.00		22.01	-43.00	-406.50	1.15	1.78	1.84
	-0.01	0.30E+06	22.02	-42.00	-406.50	1.15	1.78	1.84
	0.00	88.78	0.00	40.91	40.91	10.70	-27.70	-476.30
5	0.00		31.11	-64.75	-803.00	0.36	10.05	1.07
	-0.02	0.30E+06	31.13	-64.74	-803.00	0.37	10.05	1.07
	0.00	88.78	0.00	79.94	79.94	14.48	-38.90	-705.30
6	0.00		42.03	-88.97	-936.50	3.07	1.10	2.91
	-0.02	0.30E+06	42.07	-88.95	-936.50	3.07	1.15	2.91
	0.00	88.78	0.00	108.00	108.00	17.31	-52.20	-932.90
7	0.00		55.21	-115.80	-1275.00	8.44	13.08	2.53
	-0.04	0.30E+06	55.28	-115.80	-1275.00	8.44	13.07	2.53
	0.00	88.78	0.00	148.39	148.39	22.15	-71.50	-1287.00

C-2

PROPULSIVE WING FORCE DATA

SUMMARY, RUN 295

PT	Q ALPHA BETA	RET NO HEIGHT	CL15 CAF10 CNUC	CD15 CAF10 CNUM	CPR15 CPR10 CNUT	CBR15 CBR10 CL10	CYR15 CYR10 CD10	CSF15 CSF10 CD10
16	0.00		26.32	-57.07	-588	-2.10	-5.37	1.70
	-0.02	0.30E+06	26.34	-57.66	-588	-2.10	-5.37	1.70
	0.00	88.93	0.00	76.90	76.90	0.01	-1.00	-570.00
17	0.00		34.30	-74.37	-798.10	-0.50	-1.57	3.70
	-0.03	0.30E+06	34.42	-74.35	-798.10	-0.50	-1.57	3.70
	0.00	88.93	0.00	100.80	100.80	-0.57	-1.10	-773.30
18	0.00		46.32	-95.75	-1002.00	0.13	-0.10	3.77
	-0.03	0.30E+06	46.30	-95.72	-1002.00	0.13	-0.10	3.77
	0.00	88.93	0.00	129.90	129.90	0.13	-1.74	-1020.00
19	0.00		55.31	-113.10	-1271.00	0.57	0.00	3.43
	-0.04	0.30E+06	55.40	-113.10	-1271.00	0.57	0.00	3.43
	0.00	88.93	0.00	154.40	154.40	-0.05	-1.91	-1222.00

PROPULSIVE WING FORCE DATA

SUMMARY, RUN 296

PT	Q ALPHA BETA	RET NO HEIGHT	CL15 CAF10 CNUC	CD15 CAF10 CNUM	CPR15 CPR10 CNUT	CBR15 CBR10 CL10	CYR15 CYR10 CD10	CSF15 CSF10 CD10
2	30.25		0.22	0.03	-0.25	0.00	0.00	0.01
	-2.00	0.90E+06	0.22	0.04	-0.25	0.00	0.00	0.01
	0.00	87.77	0.00	0.00	0.00	0.30	0.00	-0.24
3	30.00		0.41	0.04	-0.27	0.00	0.00	0.01
	0.03	0.90E+06	0.41	0.04	-0.27	0.00	0.00	0.01
	0.00	88.29	0.00	0.00	0.00	0.28	0.00	-0.28
4	30.00		0.50	0.05	-0.28	0.00	0.00	0.01
	2.00	0.90E+06	0.50	0.03	-0.28	0.00	0.00	0.01
	0.00	88.07	0.00	0.00	0.00	0.47	0.10	-0.27
5	29.77		0.57	0.07	-0.29	0.00	0.00	0.01
	4.00	0.90E+06	0.58	0.02	-0.29	0.00	0.00	0.01
	0.00	87.59	0.00	0.00	0.00	0.55	0.11	-0.28
6	29.00		0.67	0.08	-0.31	0.00	0.00	0.01
	6.02	0.90E+06	0.67	0.01	-0.31	0.00	0.00	0.01
	0.00	87.00	0.00	0.00	0.00	0.64	0.13	-0.30
7	29.77		0.76	0.10	-0.32	0.00	0.00	0.00
	8.00	0.90E+06	0.77	0.00	-0.32	0.00	0.00	0.00
	0.00	87.44	0.00	0.00	0.00	0.73	0.15	-0.31
8	29.77		0.86	0.13	-0.34	0.00	0.00	0.01
	10.00	0.90E+06	0.87	-0.02	-0.34	0.00	0.00	0.01
	0.00	87.00	0.00	0.00	0.00	0.83	0.18	-0.33
9	29.77		0.98	0.18	-0.37	0.00	0.00	0.00
	12.00	0.90E+06	1.00	-0.03	-0.37	0.00	0.00	0.00
	0.00	87.35	0.00	0.00	0.00	0.95	0.22	-0.38
10	29.00		1.08	0.23	-0.39	0.00	0.00	0.00
	14.00	0.90E+06	1.10	-0.04	-0.39	0.00	0.00	0.00
	0.00	88.01	0.00	0.00	0.00	1.05	0.27	-0.39
11	29.00		1.15	0.32	-0.40	0.00	0.00	0.01
	17.04	0.90E+06	1.18	-0.03	-0.40	0.00	0.00	0.01
	0.00	87.39	0.00	0.00	0.00	1.11	0.37	-0.39
12	29.43		1.29	0.40	-0.43	0.00	0.00	0.00
	18.00	0.90E+06	1.25	-0.01	-0.43	0.00	0.00	0.00
	0.00	87.44	0.00	0.00	0.00	1.18	0.44	-0.42
13	29.31		1.18	0.43	-0.42	0.00	0.00	0.00
	20.00	0.87E+06	1.25	-0.01	-0.42	0.00	0.00	0.00
	0.00	90.54	0.00	0.00	0.00	1.15	0.47	-0.42
14	30.00		1.18	0.48	-0.42	0.00	0.00	-0.01
	22.00	0.90E+06	1.28	0.00	-0.42	0.00	0.00	-0.01
	0.00	88.11	0.00	0.00	0.00	1.15	0.52	-0.42

P R O P U L S I V E W I N G F O R C E D A T A

S U M M A R Y, R U N 257

PT	Q ALPHA BETA	MET NO WEIGHT	CL15 CDF16 CMAC	CD15 CAF16 CMAM	CPN15 CPN16 CMAT	CBN15 CBN16 CLTR	CYN15 CYN16 CNTR	CSF15 CSF16 CNTQ
1	21.15		0.71	-0.35	-0.52	0.00	0.00	0.02
	-2.00	0.83E+00	0.72	-0.33	-0.52	0.00	0.00	0.02
	0.00	87.88	0.00	0.53	0.53	0.53	0.03	-0.36
2	21.15		0.82	-0.33	-0.54	0.00	0.00	0.02
	-0.04	0.83E+00	0.82	-0.33	-0.54	0.00	0.00	0.02
	0.00	87.40	0.00	0.53	0.53	0.63	0.05	-0.41
3	21.15		0.95	-0.34	-0.57	0.00	0.00	0.02
	2.08	0.83E+00	0.93	-0.34	-0.57	0.00	0.00	0.02
	0.00	86.87	0.00	0.53	0.53	0.74	0.07	-0.44
4	21.04		1.07	-0.28	-0.00	0.00	0.00	0.01
	4.03	0.83E+00	1.06	-0.25	-0.00	0.00	0.00	0.01
	0.00	87.00	0.00	0.53	0.53	0.85	0.10	-0.46
5	21.04		1.10	-0.24	-0.03	0.00	0.00	0.01
	6.03	0.83E+00	1.10	-0.20	-0.03	0.00	0.00	0.01
	0.00	90.18	0.00	0.54	0.54	0.95	0.13	-0.48
6	21.15		1.31	-0.20	-0.05	0.00	0.00	0.02
	8.01	0.83E+00	1.27	-0.20	-0.05	0.00	0.00	0.02
	0.00	87.43	[illegible]	0.53	0.53	1.06	0.18	-0.51
7	21.04		1.45	-0.14	-0.08	0.00	0.00	0.02
	10.05	0.83E+00	1.41	-0.20	-0.08	0.00	0.00	0.02
	0.00	88.21	0.00	0.54	0.54	1.18	0.21	-0.55
8	21.04		1.00	-0.06	-0.73	0.00	0.00	0.01
	12.02	0.83E+00	1.55	-0.41	-0.73	0.00	0.00	0.01
	0.00	88.37	0.00	0.54	0.54	1.33	0.26	-0.58
9	21.15		1.74	0.00	-0.75	0.00	0.00	0.02
	14.01	0.83E+00	1.80	-0.42	-0.75	0.00	0.00	0.02
	0.00	88.55	0.00	0.54	0.54	1.48	0.33	-0.62
10	21.04		1.90	0.00	-0.80	0.00	0.00	0.01
	16.05	0.83E+00	1.85	-0.44	-0.80	0.00	0.00	0.01
	0.00	87.21	0.00	0.54	0.54	1.66	0.41	-0.66
11	20.02		2.03	0.10	-0.83	0.00	0.00	0.01
	18.07	0.83E+00	1.98	-0.48	-0.83	0.00	0.00	0.01
	0.00	88.34	0.00	0.54	0.54	1.72	0.50	-0.68
12	20.58		2.10	0.20	-0.87	0.00	0.00	0.02
	20.08	0.83E+00	2.15	-0.48	-0.87	0.00	0.00	0.02
	0.00	91.10	0.00	0.55	0.55	1.86	0.60	-0.73
13	20.58		2.28	0.40	-0.90	0.00	0.01	0.01
	22.03	0.83E+00	2.27	-0.49	-0.90	0.00	0.01	0.01
	0.00	88.23	0.00	0.55	0.55	1.95	0.70	-0.75

P R O P U L S I V E W I N G F O R C E D A T A

S U M M A R Y, R U N 258

PT	Q ALPHA BETA	MET NO WEIGHT	CL15 CDF16 CMAC	CD15 CAF16 CMAM	CPN15 CPN16 CMAT	CBN15 CBN16 CLTR	CYN15 CYN16 CNTR	CSF15 CSF16 CNTQ
1	10.50		0.03	-0.70	-0.00	0.00	0.00	0.03
	-2.04	0.50E+00	0.00	-0.73	-0.00	0.00	0.00	0.03
	0.00	87.40	0.00	1.00	1.00	0.50	0.04	-0.41
2	10.00		1.07	-0.73	-0.71	0.00	0.01	0.03
	-0.02	0.50E+00	1.07	-0.73	-0.71	0.00	0.01	0.03
	0.00	88.10	0.00	1.07	1.07	0.68	0.08	-0.43
3	10.00		1.21	-0.00	-0.74	0.00	0.01	0.02
	2.07	0.50E+00	1.18	-0.73	-0.74	0.00	0.01	0.02
	0.00	88.94	0.00	1.07	1.07	0.78	0.08	-0.47
4	10.48		1.35	-0.67	-0.75	0.00	0.01	0.01
	4.02	0.50E+00	1.30	-0.70	-0.75	0.00	0.01	0.01
	0.00	88.20	0.00	1.00	1.00	0.90	0.10	-0.50
5	10.48		1.50	-0.02	-0.81	0.01	0.01	0.01
	6.00	0.50E+00	1.43	-0.74	-0.81	0.00	0.01	0.01
	0.00	88.97	0.00	1.10	1.10	1.02	0.14	-0.53
6	10.50		1.64	-0.58	-0.84	0.01	0.01	0.01
	8.02	0.50E+00	1.59	-0.70	-0.84	0.00	0.01	0.01
	0.00	87.17	0.00	1.00	1.00	1.14	0.18	-0.55
7	10.48		1.82	-0.00	-0.88	0.01	0.01	0.00
	10.10	0.50E+00	1.71	-0.61	-0.88	0.00	0.01	0.00
	0.00	87.83	0.00	1.10	1.10	1.28	0.23	-0.60
8	10.48		1.96	-0.42	-0.93	0.00	0.01	0.00
	12.02	0.50E+00	1.83	-0.62	-0.93	0.00	0.01	0.00
	0.00	88.23	0.00	1.00	1.00	1.38	0.29	-0.64
9	10.35		2.18	-0.33	-0.97	0.01	0.01	0.00
	14.02	0.50E+00	2.02	-0.85	-0.97	0.00	0.01	0.00
	0.00	88.85	[illegible]	1.11	1.11	1.56	0.37	-0.68
10	10.23		2.24	-0.23	-1.01	0.01	0.01	0.00
	16.37	0.50E+00	2.18	-0.87	-1.01	0.00	0.01	0.00
	0.00	87.48	0.00	1.12	1.12	1.71	0.45	-0.71
11	10.23		2.40	-0.12	-1.03	0.01	0.01	0.01
	18.08	0.50E+00	2.33	-0.88	-1.03	0.00	0.01	0.01
	0.00	87.20	0.00	1.12	1.12	1.83	0.54	-0.74
12	10.23		2.60	-0.01	-1.05	0.01	0.02	0.00
	20.02	0.50E+00	2.44	-0.90	-1.05	0.00	0.02	0.00
	0.00	91.38	0.00	1.12	1.12	1.93	0.63	-0.75
13	10.23		2.83	0.00	-1.05	0.01	0.02	-0.01
	20.01	0.50E+00	2.47	-0.90	-1.00	0.00	0.02	-0.01
	0.00	91.36	0.00	1.12	1.12	[illegible]	0.04	-0.78
14	10.00		2.78	0.12	-1.13	0.01	0.02	0.00
	22.07	0.57E+00	2.63	-0.94	-1.13	0.00	0.02	0.00
	0.00	99.01	0.00	1.15	1.15	2.07	0.75	-0.82

PROPULSIVE WING FORCE DATA

SUMMARY, RUN 250

PT	Q ALPHA BETA	RET NO HEIGHT	CL15 CDF10 CNWC	CD15 CAF10 CNWW	CPM15 CPM10 CMWT	CBM15 CBM10 CLTR	CYM15 CYM10 CDTR	CSF15 CSF10 CMTR
1	5.29 -2.00 0.00	0.42E+06 87.38	1.26 1.42 0.00	-1.00 -1.55 2.17	-1.00 -1.00 2.17	0.01 0.01 0.02	0.01 0.01 0.03	0.02 0.02 -0.43
2	5.17 -0.01 0.00	0.41E+06 87.88	1.55 1.55 0.00	-1.00 -1.50 2.23	-1.05 -1.05 2.23	0.01 0.01 0.73	0.02 0.02 0.00	0.02 0.02 -0.40
3	5.29 2.00 0.00	0.42E+06 88.79	1.70 1.05 0.00	-1.51 -1.57 2.18	-1.00 -1.00 2.18	0.01 0.01 0.04	0.02 0.02 0.07	0.02 0.02 -0.40
4	5.29 4.02 0.00	0.42E+06 88.70	1.05 1.71 0.00	-1.45 -1.57 2.17	-1.10 -1.10 2.17	0.01 0.01 0.03	0.02 0.02 0.11	0.02 0.02 -0.53
5	5.29 6.00 0.00	0.42E+06 87.02	2.03 1.87 0.00	-1.30 -1.50 2.10	-1.13 -1.13 2.10	0.01 0.01 1.00	0.02 0.02 0.13	0.01 0.01 -0.55
6	5.17 8.05 0.00	0.41E+06 86.04	2.20 2.00 0.00	-1.22 -1.04 2.23	-1.17 -1.17 2.23	0.01 0.01 1.23	0.02 0.02 0.30	0.01 0.01 -0.56
7	5.00 10.04 0.00	0.41E+06 87.50	2.40 2.22 0.00	-1.20 -1.00 2.30	-1.25 -1.25 2.30	0.01 0.01 1.30	0.02 0.02 0.34	0.01 0.01 -0.00
8	4.84 12.02 0.00	0.40E+06 87.30	2.72 2.41 0.00	-1.31 -1.75 2.34	-1.33 -1.33 2.34	0.01 0.01 1.51	0.03 0.03 0.31	0.00 0.00 -0.71
9	5.00 14.07 0.00	0.41E+06 87.54	2.90 2.50 0.00	-1.05 -1.73 2.30	-1.35 -1.35 2.30	0.02 0.01 1.00	0.03 0.03 0.30	-0.01 -0.01 -0.74
10	5.29 16.00 0.00	0.42E+06 88.00	2.00 2.03 0.00	-0.00 -1.07 2.10	-1.34 -1.34 2.10	0.02 0.01 1.75	0.03 0.03 0.40	-0.02 -0.02 -0.70
11	5.29 18.04 0.00	0.42E+06 88.50	3.15 2.77 0.00	-0.75 -1.00 2.19	-1.30 -1.30 2.10	0.02 0.01 1.07	0.03 0.03 0.55	-0.02 -0.02 -0.70
12	5.17 20.02 0.00	0.41E+06 91.57	3.35 2.93 0.00	-0.03 -1.74 2.24	-1.00 -1.00 2.24	0.02 0.01 1.00	0.03 0.04 0.00	-0.02 -0.02 -0.01
13	5.17 22.02 0.00	0.41E+06 90.00	3.51 3.07 0.00	-0.46 -1.76 2.24	-1.03 -1.03 2.24	0.02 0.01 3.11	0.03 0.04 0.70	-0.01 -0.01 -0.00

PROPULSIVE WING FORCE DATA

SUMMARY, RUN 260

PT	Q ALPHA BETA	RET NO HEIGHT	CL15 CDF10 CNWC	CD15 CAF10 CNWW	CPM15 CPM10 CMWT	CBM15 CBM10 CLTR	CYM15 CYM10 CDTR	CSF15 CSF10 CMTR
2	0.00 0.00 0.00	0.30E+06 50.00	10.50 10.50 0.00	-35.00 -35.00 24.32	-230.00 -230.00 33.20	-10.57 -10.57 5.00	-20.22 -20.21 -13.00	0.55 0.55 -231.00
3	0.00 0.00 0.00	0.30E+06 50.00	24.50 24.50 10.00	-83.00 -83.00 04.01	-415.10 -415.10 70.00	-23.30 -23.31 7.05	-40.52 -40.52 -25.70	6.02 6.02 -004.30
4	0.00 0.00 0.00	0.30E+06 50.00	30.12 30.13 30.35	-05.30 -35.35 07.73	-561.30 -561.30 133.00	-20.00 -20.00 9.05	-00.10 -00.10 -30.01	1.40 1.40 -543.50
5	0.00 0.00 0.00	0.30E+06 50.00	50.00 50.00 45.02	-137.00 -137.00 172.40	-700.00 -700.00 107.00	-35.30 -35.30 14.51	-111.00 -111.00 -52.04	3.07 3.07 -700.30
6	0.00 0.00 0.00	0.30E+06 50.00	00.30 00.30 01.42	-100.10 -100.10 150.00	-1104.00 -1104.00 220.00	-30.42 -30.43 10.50	-100.00 -100.00 -00.00	0.04 0.04 -1000.00

PROPULSIVE WING FORCE DATA

SUMMARY, RUN 301

PT	Q ALPHA BETA	REY NO HEIGHT	CL15 CRF10 CRNC	CD15 CAF10 CRNN	CPN15 CPN10 CRNT	CBN15 CBN10 CLT0	CYN15 CYN10 CRT0	CSF15 CSF10 CRT0
30	0.00		25.75	-77.01	-433.00	-20.37	-85.12	1.02
	-0.02	0.30E+06	25.20	-77.00	-433.00	-20.30	-85.11	1.02
	0.00	88.70	32.53	76.76	163.30	6.32	-33.05	-410.70
31	0.00		46.55	-105.30	-633.10	-25.00	-102.00	3.13
	-0.02	0.30E+06	46.50	-105.30	-633.10	-25.43	-102.00	3.13
	0.00	88.70	45.10	86.77	144.00	5.42	-31.43	-866.10
32	0.00		55.36	-126.50	836.00	-22.00	-113.00	3.50
	-0.02	0.30E+06	55.40	-126.50	-836.00	-22.03	-113.00	3.50
	0.00	88.70	56.34	127.00	185.00	6.53	-41.42	-804.70
33	0.00		61.02	-186.40	-966.70	-40.04	-130.00	3.90
	-0.02	0.30E+06	61.07	-186.40	-966.70	-40.07	-130.00	3.90
	0.00	88.70	66.50	194.00	216.50	5.45	-48.54	-929.00
34	0.00		66.05	-188.20	-1046.00	-43.54	-132.00	3.32
	-0.02	0.30E+06	66.71	-188.20	-1046.00	-43.56	-132.00	3.32
	0.00	88.70	71.92	157.00	299.50	7.24	-50.05	-1000.00

PROPULSIVE WING FORCE DATA

SUMMARY, RUN 302

PT	Q ALPHA BETA	REY NO HEIGHT	CL15 CRF10 CRNC	CD15 CAF10 CRNN	CPN15 CPN10 CRNT	CBN15 CBN10 CLT0	CYN15 CYN10 CRT0	CSF15 CSF10 CRT0
2	30.25		0.34	0.04	-0.14	0.00	0.00	0.01
	-3.01	0.10E+07	0.32	0.05	-0.14	0.00	0.00	0.01
	0.00	87.83	0.00	0.00	0.00	0.37	0.11	-0.14
3	30.23		0.45	0.06	-0.14	0.00	0.00	0.01
	-0.02	0.10E+07	0.45	0.05	-0.14	0.00	0.00	0.01
	0.00	88.03	0.00	0.00	0.00	0.48	0.12	-0.13
4	30.12		0.54	0.07	-0.12	0.00	0.00	0.01
	3.01	0.10E+07	0.58	0.05	-0.12	0.00	0.00	0.01
	0.00	87.10	0.00	0.00	0.00	0.00	0.14	-0.12
5	30.23		0.60	0.08	-0.11	0.00	0.00	0.01
	5.02	0.10E+07	0.00	0.05	-0.11	0.00	0.00	0.01
	0.00	88.97	0.00	0.00	0.00	0.71	0.17	-0.10
6	30.12		0.70	0.12	-0.08	0.00	0.00	0.01
	8.10	0.10E+07	0.00	0.04	-0.08	0.00	0.00	0.01
	0.00	88.00	0.00	0.00	0.00	0.81	0.18	-0.08
7	30.00		0.81	0.15	-0.06	0.00	0.00	0.01
	8.00	0.10E+07	0.82	0.03	-0.06	0.00	0.00	0.01
	0.00	88.03	0.00	0.00	0.00	0.93	0.23	-0.06
8	30.00		1.04	0.20	-0.04	0.00	-0.01	0.01
	10.13	0.10E+07	1.08	0.01	-0.04	0.00	0.00	0.01
	0.00	87.87	0.00	0.00	0.00	1.06	0.27	-0.04
9	20.00		1.18	0.26	-0.02	0.00	-0.01	0.01
	12.07	0.10E+07	1.21	0.00	-0.02	0.00	0.00	0.01
	0.00	87.00	0.00	0.00	0.00	1.20	0.33	-0.02
10	20.00		1.31	0.33	-0.03	0.00	0.00	0.01
	14.03	0.10E+07	1.35	-0.01	-0.03	0.00	0.00	0.01
	0.00	88.00	0.00	0.00	0.00	1.33	0.38	-0.02
11	22.00		1.42	0.20	-0.04	0.00	0.00	0.01
	16.00	0.10E+07	1.47	-0.02	-0.04	0.00	0.00	0.01
	0.00	87.00	0.00	0.00	0.00	1.43	0.46	-0.04
12	20.54		1.57	0.48	-0.00	0.00	-0.01	0.01
	16.00	0.90E+06	1.61	-0.02	-0.00	0.00	-0.01	0.01
	0.00	88.99	0.00	0.00	0.00	1.54	0.55	-0.00
13	20.20		1.63	0.56	-0.00	0.00	-0.01	0.01
	20.03	0.90E+06	1.73	-0.03	-0.00	0.00	-0.01	0.01
	0.00	87.88	0.00	0.00	0.00	1.64	0.64	-0.07
14	20.74		1.74	0.67	-0.00	0.00	-0.01	0.01
	22.06	0.90E+06	1.86	-0.03	-0.00	0.00	-0.01	0.01
	0.00	95.12	0.00	0.00	0.00	1.74	0.75	-0.00

PROPULSIVE WING FORCE DATA

SUMMARY, RUN 263

PT	Q ALPHA BETA	REY NO HEIGHT	CL15 CAF16 CNWC	CD15 CAF16 CNWA	CPM15 CPM16 CMWT	CBM15 CBM16 CLTR	CYM15 CYM16 CDTR	CLF15 CLF16 CNTR
1	21.04 -2.06 0.00	0.84E+06 87.49	0.81 0.83 0.22	-0.42 -0.42 0.46	-0.37 -0.37 0.00	0.00 0.00 0.63	-0.01 -0.01 0.05	0.04 0.04 -0.27
2	21.15 0.01 0.00	0.84E+06 87.38	0.98 0.98 0.22	-0.41 -0.41 0.47	-0.38 -0.38 0.00	0.00 0.00 0.76	-0.01 -0.01 0.06	0.03 0.03 -0.26
3	21.15 2.07 0.00	0.84E+06 88.37	1.11 1.00 0.22	-0.37 -0.41 0.46	-0.35 -0.35 0.00	0.00 0.00 0.00	-0.01 -0.01 0.12	0.03 0.03 -0.25
4	21.04 4.08 0.00	0.84E+06 87.00	1.27 1.25 0.22	-0.32 -0.42 0.42	-0.34 -0.34 0.00	-0.01 0.00 1.03	-0.01 -0.01 0.16	0.03 0.03 -0.24
5	21.04 6.07 0.00	0.84E+06 87.53	1.43 1.38 0.22	-0.26 -0.43 0.46	-0.32 -0.32 0.70	-0.01 -0.01 1.17	-0.01 -0.01 0.24	0.02 0.03 -0.22
6	21.04 8.03 0.00	0.84E+06 86.86	1.58 1.54 0.22	-0.21 -0.43 0.46	-0.29 -0.29 0.70	-0.01 -0.01 1.31	-0.01 -0.01 0.28	0.02 0.02 -0.19
7	20.92 10.10 0.00	0.84E+06 87.00	1.78 1.73 0.22	-0.14 -0.44 0.46	-0.27 -0.27 0.70	-0.01 -0.01 1.48	-0.01 -0.01 0.33	0.02 0.02 -0.17
8	21.27 12.08 0.00	0.84E+06 88.33	1.95 1.90 0.22	-0.04 -0.45 0.46	-0.25 -0.25 0.00	-0.01 0.00 1.05	-0.01 -0.01 0.41	0.02 0.02 -0.15
9	21.04 14.08 0.00	0.84E+06 87.08	2.15 2.10 0.22	0.05 -0.47 0.46	-0.24 -0.24 0.70	-0.01 0.00 1.83	-0.01 -0.01 0.50	0.01 0.01 -0.14
10	21.06 16.06 0.00	0.84E+06 87.29	2.31 2.26 0.22	0.16 -0.48 0.46	-0.21 -0.21 0.70	-0.01 0.00 1.98	-0.01 -0.01 0.50	0.01 0.01 -0.11
11	20.88 18.03 0.00	0.83E+06 88.75	2.50 2.48 0.22	0.27 -0.53 0.46	-0.18 -0.19 0.71	-0.01 0.00 2.13	-0.01 -0.01 0.70	0.01 0.01 -0.08
12	20.58 20.06 0.00	0.83E+06 87.84	2.68 2.84 0.22	0.41 -0.53 0.50	-0.17 -0.17 0.72	-0.01 0.00 2.26	-0.01 -0.01 0.83	0.01 0.01 -0.07
13	20.32 22.05 0.00	0.84E+06 94.85	2.70 2.80 0.22	0.55 -0.54 0.49	-0.15 -0.15 0.71	0.00 0.00 2.46	-0.01 -0.01 0.95	0.01 0.01 -0.05

PROPULSIVE WING FORCE DATA

SUMMARY, RUN 264

PT	Q ALPHA BETA	REY NO HEIGHT	CL15 CAF16 CNWC	CD15 CAF16 CNWA	CPM15 CPM16 CMWT	CBM15 CBM16 CLTR	CYM15 CYM16 CDTR	CLF15 CLF16 CNTR
1	10.08 -2.06 0.00	0.88E+06 87.54	1.00 1.10 0.43	-0.50 -0.54 0.50	-0.50 -0.50 1.30	0.00 0.00 0.00	-0.02 -0.02 0.05	0.04 0.04 -0.21
2	10.08 0.02 0.00	0.88E+06 87.00	1.24 1.24 0.43	-0.53 -0.53 0.50	-0.50 -0.50 1.30	-0.01 -0.01 0.03	-0.02 -0.02 0.08	0.05 0.05 -0.30
3	10.50 2.03 0.00	0.88E+06 88.99	1.44 1.41 0.44	-0.49 -0.54 0.50	-0.48 -0.48 1.41	-0.01 -0.51 0.09	-0.02 -0.02 0.12	0.04 0.04 -0.29
4	10.35 4.02 0.00	0.90E+06 88.81	1.62 1.58 0.45	-0.55 -0.56 1.00	-0.50 -0.50 1.44	-0.01 -0.01 1.12	-0.02 -0.02 0.17	0.04 0.04 -0.28
5	10.48 6.04 0.00	0.90E+06 87.38	1.80 1.71 0.44	-0.70 -0.65 0.90	-0.48 -0.48 1.43	-0.01 -0.01 1.27	-0.02 -0.02 0.23	0.04 0.04 -0.28
6	10.48 8.01 0.00	0.90E+06 88.04	2.00 1.88 0.44	-0.87 -0.85 0.90	-0.48 -0.48 1.43	-0.01 -0.01 1.44	-0.02 -0.02 0.30	0.04 0.04 -0.25
7	10.08 10.02 0.00	0.88E+06 88.78	2.18 2.05 0.43	-0.56 -0.53 0.90	-0.43 -0.43 1.40	-0.01 -0.01 1.58	-0.02 -0.02 0.37	0.02 0.02 -0.23
9	10.08 11.98 0.00	0.88E+06 88.84	2.30 2.24 0.44	-0.46 -0.85 0.90	-0.42 -0.42 1.41	-0.01 -0.01 1.77	-0.02 -0.02 0.46	0.03 0.03 -0.22
10	10.48 14.03 0.00	0.90E+06 87.57	2.46 2.36 0.45	-0.35 -0.76 1.01	-0.42 -0.42 1.48	-0.01 -0.01 1.99	-0.01 -0.02 0.57	0.02 0.02 -0.21
11	10.08 16.08 0.00	0.88E+06 87.83	2.62 2.46 0.44	-0.19 -0.87 0.90	-0.38 -0.38 1.42	-0.01 -0.01 2.13	-0.01 -0.02 0.88	0.01 0.01 -0.19
12	10.08 18.01 0.00	0.88E+06 88.54	2.99 2.83 0.44	-0.06 -0.97 0.90	-0.35 -0.35 1.42	-0.01 -0.01 2.27	-0.01 -0.01 0.78	0.01 0.01 -0.15
13	10.48 20.08 0.00	0.90E+06 90.11	3.35 3.08 0.45	0.10 -1.02 1.00	-0.34 -0.34 1.45	-0.01 -0.01 2.48	-0.01 -0.01 0.95	0.01 0.01 -0.13
14	10.50 22.04 0.00	0.88E+06 87.24	3.41 3.38 0.45	0.27 -1.03 0.90	-0.31 -0.31 1.44	-0.01 -0.01 2.82	-0.01 -0.01 1.08	0.00 0.00 -0.11

PROPULSIVE WING FORCE DATA

SUMMARY, RUN 205

PT	Q ALPHA BETA	REY NO HEIGHT	CL1S CSF1B CRWC	CD1S CAF1B CRWN	CPW1S CPW1B CRWT	CRW1S CRW1B CLTR	CYR1S CYR1B CDTR	CSF1S CSF1B CRTR
1	5.29		1.51	-2.00	-0.74	-0.01	0.03	0.07
	-2.03	0.42E+06	1.50	-2.03	-0.74	-0.01	-0.03	0.07
	0.00	87.70	0.88	1.90	2.88	0.73	0.04	-0.33
2	5.29		1.73	-2.02	-0.76	-0.01	-0.04	0.05
	0.0.	0.42E+06	1.73	-2.02	-0.76	-0.01	-0.04	0.06
	0.00	87.26	0.88	2.00	2.89	0.86	0.08	-0.35
3	5.17		2.02	-1.98	-0.77	-0.01	-0.03	0.07
	2.03	0.42E+06	1.95	-2.05	-0.77	-0.01	-0.03	0.07
	0.00	89.03	0.92	2.04	2.96	1.07	0.13	-0.35
4	5.52		2.12	-1.77	-0.73	-0.01	-0.03	0.05
	4.01	0.43E+06	2.00	-1.91	-0.73	-0.01	-0.03	0.05
	0.00	87.18	0.88	1.92	2.77	1.17	0.16	-0.33
5	5.52		2.35	-1.87	-0.71	-0.01	-0.03	0.03
	6.00	0.43E+06	2.16	-1.91	-0.71	-0.01	-0.03	0.03
	0.00	86.86	0.86	1.91	2.77	1.33	0.24	-0.31
6	5.40		2.63	-1.50	-0.71	-0.02	-0.03	0.05
	8.06	0.43E+06	2.38	-1.94	-0.71	-0.01	-0.04	0.05
	0.00	87.88	0.88	1.95	2.83	1.51	0.33	-0.31
7	5.40		2.86	-1.47	-0.80	-0.02	-0.03	.02
	10.00	0.43E+06	2.56	-1.95	-0.80	-0.01	-0.03	0.02
	0.00	87.78	0.88	1.96	2.84	1.90	0.40	-0.29
8	5.4.		3.16	-1.32	-0.70	-0.02	-0.03	0.02
	12.07	0.43E+06	2.81	-1.95	-0.70	-0.01	-0.04	0.02
	0.00	88.07	0.88	1.96	2.84	1.91	0.51	-0.30
9	5.29		3.50	-1.18	-0.71	-0.02	-0.03	0.04
	14.11	0.42E+06	3.11	-1.99	-0.71	-0.01	-0.04	0.04
	0.00	87.70	0.90	2.00	2.89	2.17	0.85	-0.30
10	5.29		3.66	-1.03	-0.80	-0.02	-0.03	0.01
	16.03	0.42E+06	3.25	-2.01	-0.80	-0.02	-0.03	0.01
	0.00	86.48	0.90	1.99	2.89	2.36	0.75	-0.24
11	5.17		4.02	-0.84	-0.80	-0.03	-0.03	0.04
	18.03	0.42E+06	3.57	-2.05	-0.80	-0.02	-0.04	0.04
	0.00	87.8.	0.92	2.05	2.97	2.53	0.93	-0.27
12	5.17		4.37	-0.64	-0.80	-0.03	-0.03	0.01
	20.00	0.42E+06	3.79	-2.06	-0.80	-0.02	-0.03	0.01
	0.00	91.03	0.91	2.04	2.95	2.72	1.08	-0.27
13	5.06		4.80	-0.42	-0.80	-0.04	-0.03	0.04
	22.01	0.41E+06	4.10	-2.12	-0.80	-0.02	-0.04	0.04
	0.00	98.46	0.94	2.10	3.03	2.95	1.27	-0.26

PROPULSIVE WING FORCE DATA

SUMMARY, RUN 200

PT	Q ALPHA BETA	REY NO HEIGHT	CL1S CSF1B CRWC	CD1S CAF1B CRWN	CPW1S CPW1B CRWT	CRW1S CRW1B CLTR	CYR1S CYR1B CDTR	CSF1S CSF1B CRTR
18	0.00		8.03	-25.18	184.30	-25.00	-49.79	-0.28
	0.04	0.30E+06	8.02	-25.18	184.30	-25.02	-49.81	-0.28
	0.00	67.50	34.21	0.00	34.21	-18.88	92.20	188.10
19	0.00		10.97	-33.17	246.20	-29.74	-45.44	0.22
	0.08	0.30E+06	10.93	-33.18	246.20	-29.00	-45.47	0.22
	0.00	87.50	48.99	0.00	48.99	-20.84	70.15	285.90
20	0.00		13.88	-42.25	318.70	-38.53	-52.20	-0.25
	0.07	0.30E+06	13.80	-42.38	318.70	-38.52	-52.24	-0.25
	0.00	87.50	58.93	0.00	58.93	-40.08	88.24	345.50
21	0.00		15.13	-51.33	403.80	-45.32	-84.04	0.77
	0.08	0.30E+06	15.08	-51.35	403.80	-45.10	-84.11	0.77
	0.00	87.50	72.41	0.00	72.41	-48.90	108.20	435.20

PROPULSIVE WING FORCE DATA

SUMMARY, RUN 207

PT	Q ALPHA BETA	REY NO HEIGHT	CL15 CNF16 CNWC	CD15 CAF16 CNWW	CPM15 CPM16 CNWT	CNM15 CNM16 CLTR	CYM15 CYM16 CDTR	CSF15 CSF16 CNTR
16	30.12		0.11	0.02	0.07	0.00	0.00	0.01
	-2.02	0.10E+07	0.10	0.02	0.07	0.00	0.00	0.01
	0.00	80.46	0.00	0.00	0.00	0.13	0.04	0.06
17	30.12		0.14	0.02	0.10	0.00	0.00	0.01
	-0.02	0.10E+07	0.14	0.02	0.10	0.00	0.00	0.01
	0.00	87.21	0.00	0.00	0.00	0.18	0.05	0.10
18	30.00		0.17	0.03	0.14	0.00	0.00	0.01
	2.01	0.10E+07	0.18	0.02	0.14	0.00	0.00	0.01
	0.00	88.03	0.00	0.00	0.00	0.20	0.05	0.13
19	30.00		0.21	0.03	0.17	0.00	0.00	0.01
	4.00	0.10E+07	0.22	0.02	0.17	0.00	0.00	0.01
	0.00	84.78	0.00	0.00	0.00	0.23	0.06	0.17
20	30.00		0.25	0.04	0.21	0.00	0.00	0.01
	6.00	0.10E+07	0.25	0.01	0.21	0.00	0.00	0.01
	0.00	84.31	0.00	0.00	0.00	0.27	0.07	0.20
21	30.00		0.29	0.05	0.25	0.00	0.00	0.01
	7.99	0.10E+07	0.30	0.01	0.25	0.00	0.00	0.01
	0.00	85.84	0.00	0.00	0.00	0.31	0.08	0.25
22	29.99		0.34	0.07	0.30	0.00	0.00	0.01
	10.00	0.10E+07	0.35	0.01	0.30	0.00	0.00	0.01
	0.00	88.59	0.00	0.00	0.00	0.36	0.10	0.29
23	30.00		0.39	0.08	0.34	0.00	0.00	0.01
	11.98	0.10E+07	0.39	0.00	0.34	0.00	0.00	0.01
	0.00	88.01	0.00	0.00	0.00	0.40	0.11	0.33
24	30.12		0.41	0.10	0.37	0.00	0.00	0.00
	13.99	0.10E+07	0.42	0.00	0.37	0.00	0.00	0.00
	0.00	87.28	0.00	0.00	0.00	0.42	0.13	0.37
25	30.00		0.42	0.13	0.38	0.00	0.00	0.01
	15.99	0.10E+07	0.44	0.00	0.38	0.00	0.00	0.01
	0.00	85.11	0.00	0.00	0.00	0.44	0.16	0.39
26	30.12		0.42	0.14	0.40	0.00	0.00	0.00
	17.99	0.10E+07	0.45	0.01	0.40	0.00	0.00	0.00
	0.00	83.78	0.00	0.00	0.00	0.44	0.17	0.39
27	29.99		0.41	0.16	0.38	0.00	0.00	0.00
	20.02	0.99E+06	0.44	0.01	0.38	0.00	0.00	0.00
	0.00	91.59	0.00	0.00	0.00	0.42	0.20	0.37
28	29.89		0.42	0.18	0.38	0.00	0.00	0.00
	21.99	0.99E+06	0.46	0.01	0.38	0.00	0.00	0.00
	0.00	95.48	0.00	0.00	0.00	0.43	0.22	0.38

PROPULSIVE WING FORCE DATA

SUMMARY, RUN 208

PT	Q ALPHA BETA	REY NO HEIGHT	CL15 LNF16 CNWC	CD15 CAF16 CNWW	CPM15 CPM16 CNWT	CNM15 CNM16 CLTR	CYM15 CYM'S CDTR	CSF15 CSF16 CNTR
1	21.04		0.24	-0.14	0.17	0.00	0.00	0.02
	-2.02	0.83E+06	0.24	-0.13	0.17	0.00	0.00	0.02
	0.00	83.39	0.23	0.00	0.23	0.10	0.01	0.14
2	21.04		0.29	-0.13	0.21	0.00	-0.01	0.02
	0.00	0.83E+06	0.29	-0.13	0.21	0.00	-0.01	0.02
	0.00	90.30	0.22	0.00	0.22	0.24	0.02	0.17
3	21.15		0.33	-0.12	0.25	0.00	-0.01	0.02
	2.01	0.84E+06	0.33	-0.13	0.25	0.00	-0.01	0.02
	0.00	88.17	0.22	0.00	0.22	0.28	0.03	0.21
4	21.04		0.39	-0.11	0.29	0.00	-0.01	0.02
	3.98	0.83E+06	0.38	-0.14	0.29	0.00	-0.01	0.02
	0.00	85.96	0.22	0.00	0.22	0.33	0.04	0.25
5	21.04		0.45	-0.09	0.33	0.00	-0.01	0.03
	5.99	0.83E+06	0.44	-0.14	0.33	0.00	-0.01	0.03
	0.00	88.00	0.22	0.00	0.22	0.39	0.06	0.30
6	21.15		0.51	-0.07	0.38	0.00	-0.01	0.01
	8.01	0.84E+06	0.49	-0.14	0.38	0.00	-0.01	0.01
	0.00	88.58	0.22	0.00	0.22	0.44	0.07	0.34
7	21.04		0.57	-0.05	0.43	0.00	-0.01	0.02
	10.01	0.83E+06	0.55	-0.15	0.43	0.00	-0.01	0.02
	0.00	89.24	0.23	0.00	0.23	0.49	0.08	0.40
8	21.04		0.64	-0.03	0.48	0.00	-0.01	0.01
	11.99	0.83E+06	0.62	-0.16	0.48	0.00	-0.01	0.01
	0.00	90.25	0.23	0.00	0.23	0.55	0.12	0.45
9	20.92		0.71	0.01	0.54	0.00	-0.01	0.01
	13.00	0.83E+06	0.68	-0.16	0.54	0.00	-0.01	0.01
	0.00	87.84	0.23	0.00	0.23	0.62	0.15	0.50
10	20.92		0.78	0.04	0.59	0.00	-0.01	0.02
	16.01	0.83E+06	0.74	-0.17	0.59	0.00	-0.01	0.02
	0.00	87.03	0.23	0.00	0.23	0.67	0.18	0.55
11	20.92		0.82	0.08	0.64	0.00	-0.01	0.01
	17.99	0.83E+06	0.81	-0.17	0.64	0.00	-0.01	0.01
	0.00	86.70	0.23	0.00	0.23	0.73	0.22	0.61
12	20.92		0.88	0.13	0.69	0.00	-0.01	0.01
	19.98	0.83E+06	0.87	-0.18	0.69	0.00	-0.01	0.01
	0.00	87.13	0.23	0.00	0.23	0.78	0.26	0.66
13	20.92		0.94	0.18	0.75	0.00	-0.01	0.01
	22.01	0.83E+06	0.94	-0.18	0.75	0.00	-0.01	0.01
	0.00	94.23	0.23	0.00	0.23	0.83	0.31	0.72

PROPULSIVE WING FORCE DATA

SUMMARY, RUN 300

PT	Q ALPHA BETA	REY NO HEIGHT	CL15 CRF16 CRUC	CD15 CAF16 CRUM	CPR15 CPR16 CRUT	CRR15 CRR16 CLTR	CYR15 CYR16 CDTR	CSF15 CSF16 CRTR
1	10.48		0.32	-0.31	0.23	0.00	-0.01	0.02
	-2.00	0.50E+06	0.33	-0.30	0.23	0.00	-0.01	0.02
	0.00	84.56	0.46	0.00	0.46	0.23	0.00	0.16
2	10.58		0.38	-0.30	0.27	0.00	-0.01	0.03
	-0.01	0.50E+06	0.38	-0.30	0.27	0.00	-0.01	0.03
	0.00	87.70	0.45	0.00	0.45	0.28	0.02	0.20
3	10.58		0.43	-0.28	0.31	0.00	-0.01	0.03
	1.99	0.50E+06	0.42	-0.30	0.31	0.00	-0.01	0.02
	0.00	88.98	0.45	0.00	0.45	0.32	0.03	0.24
4	10.58		0.49	-0.27	0.35	-0.01	-0.01	0.02
	3.99	0.50E+06	0.47	-0.30	0.35	0.00	-0.01	0.02
	0.00	88.84	0.45	0.00	0.45	0.37	0.04	0.28
5	10.58		0.55	-0.25	0.40	-0.01	0.01	0.01
	5.01	0.50E+06	0.52	-0.31	0.40	0.00	-0.01	0.01
	0.00	88.25	0.44	0.00	0.44	0.41	0.05	0.33
6	10.48		0.65	-0.22	0.45	-0.01	-0.01	0.03
	8.01	0.50E+06	0.61	-0.31	0.45	0.00	-0.01	0.03
	0.00	87.42	0.44	0.00	0.44	0.51	0.08	0.38
7	10.58		0.71	-0.19	0.50	-0.01	-0.01	0.03
	9.88	0.50E+06	0.67	-0.31	0.50	0.00	-0.01	0.03
	0.00	88.70	0.44	0.00	0.44	0.58	0.10	0.43
8	10.58		0.80	-0.15	0.55	-0.01	-0.01	0.03
	12.01	0.50E+06	0.75	-0.32	0.55	0.00	-0.01	0.03
	0.00	89.34	0.44	0.00	0.44	0.63	0.13	0.48
9	10.58		0.87	-0.12	0.61	-0.01	-0.01	0.02
	14.00	0.50E+06	0.81	-0.32	0.61	0.00	-0.01	0.02
	0.00	88.78	0.44	0.00	0.44	0.70	0.16	0.53
10	10.58		0.93	-0.08	0.65	-0.01	-0.01	0.02
	15.98	0.50E+06	0.87	-0.33	0.65	0.00	-0.02	0.02
	0.00	86.66	0.44	0.00	0.44	0.75	0.20	0.58
11	10.58		0.98	-0.03	0.71	-0.01	0.01	0.03
	17.98	0.50E+06	0.94	-0.33	0.71	0.00	-0.02	0.03
	0.00	88.77	0.44	0.00	0.44	0.80	0.24	0.6[illegible]
12	10.58		1.07	0.03	0.76	-0.01	-0.02	0.03
	19.98	0.50E+06	1.02	-0.34	0.76	0.00	-0.02	0.03
	0.00	88.34	0.44	0.00	0.44	0.87	0.29	0.80
13	10.48		1.18	0.10	0.83	-0.01	-0.01	0.04
	21.98	0.50E+06	1.11	-0.34	0.8[illegible]	0.00	-0.02	0.04
	0.00	98.51	0.45	0.00	0.45	0.95	0.35	0.75

PROPULSIVE WING FORCE DATA

SUMMARY, RUN 270

PT	Q ALPHA BETA	REY NO HEIGHT	CL15 CRF16 CRUC	CD15 CAF16 CRUM	CPR15 CPR16 CRUT	CRR15 CRR16 CLTR	CYR15 CYR16 CDTR	CSF15 CSF16 CRTR
1	5.17		0.43	-0.08	0.34	-0.01	-0.02	0.04
	-1.99	0.42E+06	0.45	-0.04	0.34	-0.01	-0.02	0.04
	0.00	84.83	0.90	0.00	0.90	0.25	-0.01	0.10
2	5.29		0.54	-0.02	0.37	-0.01	-0.02	0.04
	0.01	0.42E+06	0.54	-0.02	0.37	-0.01	-0.02	0.04
	0.00	91.03	0.88	0.00	0.88	0.34	0.01	0.22
3	5.29		0.57	-0.00	0.42	-0.01	-0.01	0.03
	2.01	0.42E+06	0.55	-0.02	0.42	-0.01	-0.02	0.03
	0.00	87.10	0.88	0.00	0.88	0.35	0.02	0.27
4	5.29		0.65	-0.50	0.46	-0.01	-0.02	0.03
	4.02	0.42E+06	0.60	-0.02	0.46	-0.01	-0.02	0.03
	0.00	88.55	0.88	0.00	0.88	0.40	0.03	0.31
5	5.29		0.75	-0.50	0.50	-0.01	-0.02	0.04
	5.99	0.42E+06	0.00	-0.03	0.50	-0.01	-0.02	0.04
	0.00	88.70	0.88	0.00	0.88	0.40	0.05	0.38
6	5.29		0.00	-0.53	0.55	-0.01	-0.02	0.02
	8.01	0.42E+06	0.71	-0.04	0.55	-0.01	-0.02	0.02
	0.00	85.98	0.80	0.00	0.80	0.51	0.06	0.41
7	5.29		0.94	-0.49	0.00	-0.01	-0.02	0.01
	10.00	0.42E+06	0.84	-0.04	0.00	-0.01	-0.02	0.02
	9.00	85.10	0.88	0.00	0.88	0.63	0.10	0.46
8	5.29		1.01	-0.45	0.88	-0.02	-0.02	0.03
	12.02	0.42E+06	0.00	-0.05	0.88	-0.01	-0.03	0.03
	0.00	88.17	0.88	0.00	0.88	0.68	0.12	0.52
9	5.29		1.10	-0.40	0.71	-0.02	-0.02	0.01
	14.00	0.42E+06	0.87	-0.08	0.71	-0.01	-0.02	0.01
	0.00	88.93	0.88	0.00	0.88	0.75	0.16	0.57
10	5.29		1.18	-0.35	0.77	-0.02	-0.02	0.03
	15.98	0.42E+06	1.05	-0.0[illegible]	0.77	-0.01	-0.03	0.03
	0.00	88.01	0.88	0.00	0.88	0.83	0.20	0.63
11	5.29		1.28	-0.29	0.82	-0.02	-0.02	0.02
	17.98	0.42E+06	1.13	-0.07	0.82	-0.01	-0.03	0.02
	0.00	88.27	0.88	0.00	0.88	0.88	0.25	0.68
12	5.29		1.36	-0.23	0.88	-0.02	-0.02	0.02
	20.00	0.42E+06	1.20	-0.08	0.88	-0.01	-0.03	0.02
	0.00	90.[illegible]	0.88	0.00	0.88	0.95	0.30	0.74
13	5.29		1.47	-0.14	0.94	-0.02	-0.03	0.03
	22.02	0.42E+06	1.31	-0.08	0.94	-0.01	-0.03	[illegible].03
	0.00	97.92	0.89	0.00	0.89	1.05	0.37	0.79

PROPULSIVE WING FORCE DATA

SUMMARY, RUN 271

PT	Q ALPHA BETA	REY NO HEIGHT	CL15 CNF16 CNWC	CD15 CAF16 CNWH	CPM15 CPM16 CMWT	CLR15 CRM16 CLTR	CYR15 CYR16 CDTR	CSF15 CSF16 CRTR
29	0.00		12.77	-4.04	-235.50	4.81	18.06	-0.07
	0.00	0.30E+06	12.77	-4.04	-235.50	4.31	18.06	-0.07
	0.00	88.31	0.00	16.82	16.82	31.44	4.08	-238.40
30	0.00		27.54	-15.93	-817.90	3.56	33.39	-0.37
	-0.02	0.30E+06	27.55	-15.92	-817.90	3.57	38.39	-0.37
	0.00	88.31	0.00	18.C	19.85	31.11	-1.04	-821.50
31	0.00		44.35	-29.23	-1071.00	-7.58	45.17	-2.20
	-0.04	0.30E+06	44.37	-29.20	-1071.00	-7.58	45.18	-2.20
	0.00	88.31	0.00	48.74	48.74	38.72	-1.54	-1077.00

PROPULSIVE WING FORCE DATA

SUMMARY, RUN 272

PT	Q ALPHA BETA	REY NO HEIGHT	CL15 CNF16 CNWC	CD15 CAF16 CNWH	CPM15 CPM16 CMWT	CLR15 CRM16 CLTR	CYR15 CYR16 CDTR	CSF15 CSF16 CRTR
2	0.00		13.01	-12.92	-438.00	-5.56	10.88	-0.83
	-0.01	0.30E+06	13.01	-12.92	-438.00	-5.56	10.88	-0.83
	0.00	79.37	0.00	27.88	27.88	8.25	11.35	-143.40
3	0.00		32.09	-17.00	-822.30	-2.07	26.33	-1.88
	0.02	0.30E+06	32.09	-17.04	-822.30	-2.08	26.34	-1.88
	0.00	79.37	0.00	30.58	30.58	12.79	14.52	-829.50
4	0.00		30.40	-22.71	-804.40	-4.04	23.58	-1.33
	-0.02	0.30E+06	30.41	-22.88	-804.40	-4.03	23.58	-1.33
	0.00	79.37	0.00	50.71	50.71	17.32	18.37	-813.70
5	0.00		38.71	-26.45	-1004.00	-7.77	48.11	-3.83
	-0.04	0.30E+06	38.73	-28.43	-1004.00	-7.74	48.11	-3.83
	0.00	79.37	0.00	82.11	82.11	22.43	21.00	-1018.00

PROPULSIVE WING FORCE DATA

SUMMARY, RUN 273

PT	Q ALPHA BETA	REY NO HEIGHT	CL1S CNF1B CNUC	CD1S CAF1B CNUM	CPM1S CPM1B CNUT	CRM1S CRM1B CLTR	CYM1S CYM1B CDTR	CSF1S CSF1B CNTR
2	30.12		0.37	0.11	-0.27	0.01	0.00	0.00
	-2.01	0.97E+06	0.37	0.12	-0.27	0.01	0.00	0.00
	0.00	81.75	0.00	0.00	0.00	0.20	0.12	-0.26
3	30.00		0.46	0.12	-0.28	0.01	0.00	0.00
	0.01	0.97E+06	0.46	0.12	-0.28	0.01	0.00	0.00
	0.00	88.76	0.00	0.00	0.00	0.46	0.14	-0.27
4	30.00		0.53	0.14	-0.29	0.00	0.00	0.00
	2.01	0.98E+06	0.54	0.15	-0.29	0.00	0.00	0.00
	0.00	88.79	0.00	0.00	0.00	0.56	0.15	-0.28
5	30.00		0.62	0.15	-0.31	0.01	0.00	0.00
	3.99	0.97E+06	0.63	0.11	-0.31	0.01	0.00	0.00
	0.00	89.00	0.00	0.00	0.00	0.64	0.17	-0.30
6	30.12		0.71	0.17	-0.33	0.00	0.00	0.00
	6.02	0.97E+06	0.72	0.10	-0.33	0.00	0.00	0.00
	0.00	90.07	0.00	0.00	0.00	0.73	0.19	-0.32
7	30.00		0.80	0.20	-0.34	0.00	0.00	0.00
	8.02	0.97E+06	0.82	0.09	-0.34	0.00	0.00	0.00
	0.00	88.30	0.00	0.00	0.00	0.82	0.21	-0.34
8	30.00		1.01	0.28	-0.39	0.01	0.00	0.00
	12.01	0.97E+06	1.05	0.07	-0.39	0.01	0.00	0.00
	0.00	88.88	0.00	0.00	0.00	1.03	0.30	-0.38
9	30.00		1.14	0.41	-0.42	0.00	0.00	0.00
	16.03	0.97E+06	1.21	0.08	-0.42	0.00	0.00	0.00
	0.00	88.83	0.00	0.00	0.00	1.18	0.43	-0.42
10	30.12		1.15	0.47	-0.44	0.00	0.00	0.00
	17.98	0.97E+06	1.24	0.09	-0.44	0.00	0.00	0.00
	0.00	87.48	0.00	0.00	0.00	1.17	0.48	-0.43
11	30.00		1.18	0.60	-0.48	0.00	0.00	-0.01
	21.97	0.97E+06	1.32	0.12	-0.48	0.00	0.00	-0.01
	0.00	97.81	0.00	0.00	0.00	1.20	0.62	-0.47

PROPULSIVE WING FORCE DATA

SUMMARY, RUN 274

PT	Q ALPHA BETA	REY NO HEIGHT	CL1S CNF1B CNUC	CD1S CAF1B CNUM	CPM1S CPM1B CNUT	CRM1S CRM1B CLTR	CYM1S CYM1B CDTR	CSF1S CSF1B CNTR
1	10.12		0.96	-0.04	-0.70	0.00	0.00	0.00
	-2.00	0.56E+06	0.96	-0.01	-0.70	0.00	0.00	0.00
	0.00	84.10	0.00	0.49	0.49	0.87	0.19	-0.48
2	9.99		1.07	-0.01	-0.73	0.00	0.00	0.00
	-0.01	0.56E+06	1.07	-0.01	-0.73	0.00	0.00	0.00
	0.00	81.61	0.00	0.50	0.50	0.77	0.21	-0.47
3	10.00		1.15	0.02	-0.73	0.00	0.00	-0.02
	2.02	0.56E+06	1.15	-0.02	-0.73	0.00	0.00	-0.02
	0.00	88.50	0.00	0.50	0.50	0.85	0.23	-0.48
4	10.00		1.23	0.06	-0.75	0.00	0.00	0.00
	4.00	0.56E+06	1.23	-0.03	-0.75	0.00	0.00	0.00
	0.00	88.89	0.00	0.50	0.50	0.92	0.26	-0.51
5	10.00		1.31	0.10	-0.75	0.00	0.00	-0.01
	6.00	0.56E+06	1.31	-0.04	-0.75	0.00	0.00	-0.01
	0.00	88.35	0.00	0.50	0.50	0.99	0.29	-0.50
6	9.88		1.47	0.18	-0.80	0.00	0.00	-0.01
	8.03	0.56E+06	1.48	0.05	-0.80	0.00	0.00	-0.01
	0.00	88.42	0.00	0.50	0.50	1.14	0.34	-0.55
7	10.12		1.67	0.30	-0.85	0.01	0.00	-0.01
	12.00	0.56E+06	1.70	-0.05	-0.85	0.01	0.00	-0.01
	0.00	88.11	0.00	0.49	0.49	1.34	0.46	-0.59
8	9.88		1.76	0.43	-0.84	0.00	0.00	-0.01
	16.01	0.56E+06	1.81	-0.07	-0.84	0.00	0.00	-0.01
	0.00	88.35	0.00	0.50	0.50	1.41	0.56	-0.59
9	9.89		1.83	0.52	-0.87	0.00	0.00	-0.02
	18.02	0.56E+06	1.90	-0.07	-0.87	-0.01	0.00	-0.02
	0.00	88.40	0.00	0.50	0.50	1.47	0.64	-0.62
10	10.00		1.83	0.72	-0.91	0.00	0.01	-0.03
	22.00	0.56E+06	2.06	-0.08	-0.91	0.00	0.01	-0.03
	0.00	88.73	0.00	0.50	0.50	1.57	0.82	-0.66

PROPULSIVE WING FORCE DATA

SUMMARY, RUN 275

PT	Q ALPHA BETA	REY NO HEIGHT	CL1S CRF1B CNUC	CD1S CAF1B CNUW	CPM1S CPM1B CNUT	CNN1S CNN1B CLTR	CYN1S CYN1B CDTR	CSF1S CSF1B CNTR
1	4.94		1.35	-0.28	-1.01	0.00	0.00	0.01
	-2.00	0.40E+06	1.36	-0.21	-1.01	0.00	0.00	0.01
	0.00	88.04	0.00	1.01	1.01	0.77	0.22	-0.50
2	5.06		1.42	-0.20	-0.98	0.00	0.00	-0.01
	0.02	0.40E+06	1.42	-0.20	-0.98	0.00	0.00	-0.01
	0.00	88.72	0.00	0.98	0.98	0.84	0.23	-0.50
3	5.06		1.51	-0.15	-1.02	0.00	0.00	0.01
	2.01	0.40E+06	1.50	-0.21	-1.02	0.00	0.00	0.01
	0.00	90.23	0.00	0.98	0.98	0.90	0.26	-0.52
4	5.06		1.58	-0.11	-1.03	0.00	0.00	-0.01
	3.98	0.40E+06	1.57	-0.22	-1.03	0.00	0.00	-0.01
	0.00	89.66	0.00	0.98	0.98	0.97	0.29	-0.54
5	5.06		1.68	-0.07	-1.04	0.00	0.00	-0.04
	6.01	0.40E+06	1.67	-0.24	-1.04	0.00	0.00	-0.04
	0.00	88.95	0.00	0.98	0.98	1.06	0.31	-0.55
6	5.08		1.83	0.01	-1.07	0.00	0.00	-0.02
	8.00	0.40E+06	1.82	-0.24	-1.07	0.00	0.00	-0.02
	0.00	87.18	0.00	0.98	0.98	1.19	0.37	-0.57
7	5.06		2.07	0.17	-1.16	0.00	0.01	-0.03
	12.00	0.40E+06	2.06	-0.27	-1.16	0.00	0.01	-0.03
	0.00	86.90	0.00	0.98	0.98	1.40	0.48	-0.66
8	4.94		2.18	0.31	-1.15	-0.01	0.00	-0.04
	15.98	0.40E+06	2.18	-0.30	-1.15	-0.01	0.00	-0.04
	0.00	88.23	0.00	1.01	1.01	1.47	0.58	-0.64
9	4.94		2.13	0.38	-1.09	-0.01	0.00	-0.05
	17.99	0.40E+06	2.15	-0.30	-1.09	-0.01	0.00	-0.05
	0.00	88.97	0.00	0.99	0.99	1.43	0.62	-0.59
10	4.94		2.31	0.83	-1.14	-0.01	0.01	-0.06
	22.01	0.40E+06	2.38	-0.28	-1.14	-0.01	0.01	-0.06
	0.00	98.96	0.00	1.01	1.01	1.59	0.62	-0.64

PROPULSIVE WING FORCE DATA

SUMMARY, RUN 276

PT	Q ALPHA BETA	REY NO HEIGHT	CL1S CRF1B CNUC	CD1S CAF1B CNUW	CPM1S CPM1B CNUT	CNN1S CNN1B CLTR	CYN1S CYN1B CDTR	CSF1S CSF1B CNTR
1	2.53		1.83	-0.71	-1.49	0.00	0.01	-0.02
	-2.01	0.28E+06	1.95	-0.84	-1.49	0.00	0.01	-0.02
	0.00	81.09	0.00	1.97	1.97	0.78	0.21	-0.50
2	2.41		2.18	-0.87	-1.57	0.00	0.01	-0.01
	0.00	0.28E+06	2.18	-0.87	-1.57	0.00	0.01	-0.01
	0.00	88.13	0.00	2.07	2.07	0.83	0.26	-0.54
3	2.33		2.23	-0.58	-1.55	0.00	0.01	0.00
	1.92	0.28E+06	2.21	-0.83	-1.55	0.00	0.01	0.00
	0.00	88.28	0.00	1.97	1.97	1.02	0.29	-0.57
4	2.53		2.30	-0.49	-1.54	0.00	0.01	-0.01
	4.02	0.28E+06	2.26	-0.85	-1.54	0.00	0.01	-0.01
	0.00	87.78	0.00	1.97	1.97	1.08	0.31	-0.55
5	2.33		2.37	-0.42	-1.54	0.00	0.01	-0.03
	6.01	0.28E+06	2.31	-0.86	-1.54	0.00	0.01	-0.03
	0.00	85.98	0.00	1.97	1.97	1.10	0.34	-0.55
6	2.53		2.55	-0.32	-1.61	0.00	0.01	-0.07
	8.02	0.28E+06	2.48	-0.87	-1.61	0.00	0.01	-0.07
	0.00	85.08	0.00	1.98	1.98	1.28	0.39	-0.62
7	2.53		2.80	-0.13	-1.84	0.00	0.02	-0.12
	11.99	0.28E+06	2.71	-0.71	-1.84	0.00	0.02	-0.12
	0.00	87.34	0.00	1.97	1.97	1.48	0.49	-0.65
8	2.53		2.83	0.07	-1.80	-0.01	0.01	-0.09
	16.02	0.28E+06	2.74	-0.71	-1.80	-0.01	0.01	-0.09
	0.00	85.54	0.00	1.95	1.95	1.47	0.59	-0.63
9	2.53		2.82	0.15	-1.58	-0.01	0.02	-0.14
	17.99	0.28E+06	2.73	-0.73	-1.58	-0.01	0.02	-0.14
	0.00	88.37	0.00	1.94	1.94	1.44	0.62	-0.58
10	2.53		3.06	0.47	-1.61	0.00	0.02	-0.11
	21.99	0.28E+06	3.01	-0.71	-1.61	-0.01	0.02	-0.11
	0.00	98.58	0.00	1.94	1.94	1.65	0.64	-0.64

PROPULSIVE WING FORCE DATA

SUMMARY, RUN 277

PT	Q ALPHA BETA	REY NO HEIGHT	CL1S CNF1B CNUC	CD1S CAF1B CNUW	CPN1S CPN1B CNUT	CRN1S CRN1B CLTR	CYN1S CYN1B CDTR	CSF1S CSF1B CNTR
1	2.53		1.65	-0.71	-1.48	-0.01	0.01	-0.12
	-1.99	0.28E+06	1.67	-0.65	-1.48	-0.01	0.01	-0.12
	5.01	80.96	0.00	1.96	1.96	0.71	0.21	-0.49
2	2.53		2.01	-0.84	-1.52	-0.01	0.02	-0.11
	-0.01	0.28E+06	2.01	-0.84	-1.52	-0.01	0.02	-0.11
	5.01	87.89	0.00	1.96	1.96	0.83	0.25	-0.53
3	2.41		2.24	-0.81	-1.58	-0.01	0.02	-0.13
	2.01	0.28E+06	2.22	-0.88	-1.58	-0.01	0.02	-0.13
	5.01	89.97	0.00	2.06	2.06	0.98	0.27	-0.54
4	2.41		2.33	-0.54	-1.58	-0.01	0.03	-0.14
	4.02	0.28E+06	2.28	-0.70	-1.58	-0.01	0.02	-0.14
	5.01	91.48	0.00	2.06	2.06	1.04	0.30	-0.55
5	2.53		2.41	-0.41	-1.58	0.00	0.02	-0.17
	5.99	0.28E+06	2.35	-0.88	-1.58	-0.01	0.02	-0.17
	5.01	90.79	0.00	1.96	1.96	1.15	0.34	-0.59
6	2.53		2.11	-0.34	-1.60	0.00	0.02	-0.19
	7.99	0.28E+06	2.44	-0.88	-1.60	0.00	0.02	-0.19
	5.01	90.39	0.00	1.97	1.97	1.22	0.38	-0.61
7	2.53		2.75	-0.14	-1.63	-0.01	0.01	-0.18
	11.98	0.28E+06	2.66	-0.71	-1.63	-0.01	0.01	-0.18
	5.01	87.98	0.00	1.96	1.96	1.41	0.48	-0.64
8	2.53		2.78	0.02	-1.54	-0.02	0.01	-0.19
	15.99	0.28E+06	2.68	-0.74	-1.54	-0.02	0.00	-0.19
	5.01	85.68	0.00	1.97	1.97	1.38	0.55	-0.55
9	2.41		2.98	0.16	-1.68	-0.02	0.00	-0.17
	17.99	0.28E+06	2.80	-0.77	-1.68	-0.02	0.00	-0.17
	5.01	88.03	0.00	2.06	2.06	1.53	0.67	-0.64
10	2.30		3.26	0.44	-1.77	-0.02	0.01	-0.22
	22.00	0.27E+06	3.17	-0.81	-1.77	-0.02	0.00	-0.22
	5.01	99.08	0.00	2.16	2.16	1.67	0.86	-0.68

PROPULSIVE WING FORCE DATA

SUMMARY, RUN 278

PT	Q ALPHA BETA	REY NO HEIGHT	CL1S CNF1B CNUC	CD1S CAF1B CNUW	CPN1S CPN1B CNUT	CRN1S CRN1B CLTR	CYN1S CYN1B CDTR	CSF1S CSF1B CNTS
1	5.06		1.31	-0.28	-0.99	0.00	0.01	-0.10
	-2.02	0.40E+06	1.32	-0.21	-0.99	0.00	0.01	-0.10
	5.01	83.80	0.00	0.98	0.98	0.74	0.21	-0.50
2	4.94		1.44	-0.21	-1.03	0.00	0.02	-0.12
	-0.01	0.39E+06	1.44	-0.21	-1.03	0.00	0.02	-0.12
	5.01	88.42	0.00	1.00	1.00	0.84	0.24	-0.53
3	5.06		1.55	-0.15	-1.05	0.00	0.02	-0.10
	2.07	40E+06	1.55	-0.20	-1.05	0.00	0.02	-0.10
	5.01	88.78	0.00	0.98	0.98	0.95	0.27	-0.50
4	4.94		1.68	-0.11	-1.08	0.00	0.02	-0.14
	4.02	0.39E+06	1.67	-0.23	-1.08	0.00	0.02	-0.14
	5.01	87.12	0.00	1.01	1.01	1.05	0.30	-0.57
5	4.94		1.77	-0.05	-1.09	0.00	0.02	-0.13
	6.01	0.39E+06	1.75	-0.23	-1.09	0.00	0.02	-0.13
	5.01	88.02	0.00	1.00	1.00	1.12	0.34	-0.59
6	4.94		1.89	0.02	-1.12	0.01	0.02	-0.15
	7.98	0.39E+06	1.88	-0.24	-1.12	0.00	0.02	-0.15
	5.01	90.26	0.00	1.00	1.00	1.23	0.38	-0.61
7	4.94		2.15	0.19	-1.18	0.00	0.02	-0.15
	12.00	0.39E+06	2.15	-0.27	-1.18	0.00	0.02	-0.15
	5.01	84.45	0.00	1.00	1.00	1.47	0.50	-0.68
8	5.06		2.20	0.34	-1.15	-0.01	0.00	-0.13
	15.99	0.40E+06	2.21	-0.28	-1.15	-0.01	0.00	-0.13
	5.01	87.40	0.00	0.98	0.98	1.51	0.60	-0.66
9	5.06		2.37	0.44	-1.18	-0.01	0.01	-0.15
	18.00	0.40E+06	2.30	-0.28	-1.18	-0.01	0.00	-0.15
	5.01	87.58	0.00	0.99	0.99	1.58	0.68	-0.67
10	4.94		2.38	0.85	-1.23	-0.01	0.00	-0.17
	22.00	0.39E+06	2.43	-0.29	-1.23	-0.01	0.00	-0.17
	5.01	88.98	0.00	1.01	1.01	1.83	0.84	-0.72

PROPULSIVE WING FORCE DATA

SUMMARY, RUN 279

PT	Q ALPHA BETA	REY NO HEIGHT	CL1S CRF1B CNUC	CD1S CAF1B [illegible]	CPN1S CPN1B CNUT	CMN1S CMN1B CLTR	CYN1S CYN1B CDTR	CSF1S CSF1B CNTR
1	10.12		1.00	-0.04	-0.72	0.00	0.01	-0.08
	-1.99	0.58E+06	1.00	0.00	-0.72	0.00	0.01	-0.08
	5.01	81.51	0.00	0.48	0.48	0.11	0.18	-0.47
2	10.00		1.10	0.00	-0.74	0.00	0.01	-0.08
	0.03	0.58E+06	1.10	0.00	-0.74	0.00	0.01	-0.08
	5.01	88.55	0.00	0.50	0.50	0.00	0.22	-0.49
3	10.12		1.18	0.03	-0.78	0.00	0.02	-0.11
	1.88	0.58E+06	1.18	-0.01	-0.78	0.00	0.02	-0.11
	5.01	87.45	0.00	0.49	0.49	0.88	0.24	-0.51
4	10.12		1.28	0.07	-0.77	0.00	0.01	-0.11
	4.00	0.58E+06	1.28	-0.02	-0.77	0.00	0.01	-0.11
	5.01	88.01	0.00	0.48	0.48	0.87	0.27	-0.53
5	10.12		1.35	0.11	-0.78	0.00	0.01	-0.11
	6.00	0.58E+06	1.35	-0.04	-0.78	0.00	0.01	-0.11
	5.01	88.88	0.00	0.48	0.48	1.03	0.30	-0.53
6	9.89		1.51	0.17	-0.84	0.00	0.01	-0.10
	8.02	0.58E+06	1.52	-0.04	-0.84	0.00	0.01	-0.10
	5.01	89.63	0.00	0.50	0.50	1.18	0.35	-0.58
7	10.00		1.75	0.32	-0.90	0.00	0.01	-0.12
	11.99	0.58E+06	1.78	-0.05	-0.90	0.00	0.01	-0.12
	5.01	88.24	0.00	0.50	0.50	1.41	0.47	-0.65
8	9.89		1.77	0.43	-0.86	-0.01	0.00	-0.10
	16.00	0.58E+06	1.82	-0.08	-0.86	-0.01	0.00	-0.10
	5.01	83.80	0.00	0.49	0.49	1.43	0.58	-0.61
9	9.89		1.78	0.50	-0.83	-0.01	-0.01	-0.10
	17.99	0.58E+06	1.85	-0.08	-0.83	-0.01	-0.01	-0.10
	5.01	88.81	0.00	0.50	0.50	1.43	0.62	-0.58
10	9.89		1.90	0.70	-0.88	-0.01	-0.01	-0.11
	22.02	0.58E+06	2.03	-0.08	-0.88	-0.01	-0.01	-0.11
	5.01	88.84	0.00	0.50	0.50	1.54	0.80	-0.63

PROPULSIVE WING FORCE DATA

SUMMARY, RUN 280

PT	Q ALPHA BETA	REY NO HEIGHT	CL1S CRF1B CNUC	CD1S CAF1B CNUM	CPN1S CPN1B CNUT	CMN1S CMN1B CLTR	CYN1S CYN1B CDTR	CSF1S CSF1B CNTR
2	30.00		0.37	0.11	-0.27	0.00	0.00	-0.05
	-2.00	0.98E+06	0.37	0.12	-0.27	0.00	0.00	-0.05
	5.01	88.98	0.00	0.00	0.00	0.39	0.12	-0.26
3	30.00		0.48	0.12	-0.28	0.00	0.00	-0.06
	-0.01	0.98E+06	0.48	0.12	-0.28	0.00	0.00	-0.06
	5.01	87.92	0.00	0.00	0.00	0.48	0.13	-0.27
4	30.00		0.54	0.14	-0.29	0.00	0.00	-0.06
	2.02	0.98E+06	0.54	0.12	-0.29	0.00	0.00	-0.06
	5.01	87.38	0.00	0.00	0.00	0.56	0.15	-0.28
5	30.00		0.62	0.15	-0.31	0.00	0.00	-0.06
	3.99	0.98E+06	0.62	0.11	-0.31	0.00	0.00	-0.06
	5.01	88.58	0.00	0.00	0.00	0.64	0.17	-0.30
6	30.12		0.72	0.17	-0.33	0.00	0.00	-0.06
	6.00	0.98E+06	0.73	0.10	-0.33	0.00	0.00	-0.06
	5.01	88.29	0.00	0.00	0.00	0.74	0.19	-0.32
7	30.12		0.80	0.20	-0.34	0.00	0.00	-0.06
	8.00	0.98E+06	0.82	0.08	-0.34	0.00	-0.01	-0.06
	5.01	88.42	0.00	0.00	0.00	0.82	0.21	-0.33
8	30.00		1.01	0.28	-0.39	0.00	-0.01	-0.06
	11.99	0.98E+06	1.05	0.07	-0.39	0.00	-0.01	-0.06
	5.01	87.48	0.00	0.00	0.00	1.03	0.30	-0.38
9	30.00		1.14	0.41	-0.43	-0.01	-0.01	-0.07
	15.99	0.98E+06	1.21	0.08	-0.43	0.00	-0.02	-0.07
	5.01	87.95	0.00	0.00	0.00	1.16	0.43	-0.43
10	30.00		1.15	0.48	-0.44	-0.01	-0.01	-0.06
	17.96	0.98E+06	1.24	0.10	-0.44	-0.01	-0.02	-0.06
	5.01	89.55	0.00	0.00	0.00	1.16	0.49	-0.43
11	30.00		1.11	0.58	-0.43	-0.03	-0.01	-0.04
	21.99	0.98E+06	1.25	0.12	-0.43	-0.02	-0.02	-0.04
	5.01	87.89	0.00	0.00	0.07	1.13	0.80	-0.42

PROPULSIVE WING FORCE DATA

SUMMARY, RUN 281

PT	Q ALPHA BETA	REY NO WEIGHT	CL1S CRF1B CNUC	CD1S CAF1B CNUA	CPN1S CPN1B CNUT	CRN1S CRN1B CL1R	CYN1S CYN1B CD1R	CSF1S CSF1B CN1R
2	30.23		0.38	0.11	-0.28	0.00	0.00	0.00
	-2.04	0.90E+06	0.38	0.12	-0.28	0.00	0.00	0.00
	0.00	87.53	0.00	0.00	0.00	0.40	0.12	-0.28
3	30.23		0.47	0.12	-0.28	0.01	0.00	0.00
	0.02	0.90E+06	0.47	0.12	-0.28	0.01	0.00	0.00
	0.00	88.73	0.00	0.00	0.00	0.49	0.13	-0.27
4	30.35		0.55	0.14	-0.30	0.00	0.00	-0.01
	2.06	0.90E+06	0.56	0.12	-0.30	0.00	0.00	-0.01
	0.00	87.05	0.00	0.00	0.00	0.57	0.15	-0.30
5	30.12		0.84	0.15	-0.31	0.00	0.00	-0.01
	4.08	0.90E+06	0.84	0.11	-0.31	0.00	0.00	-0.01
	0.00	88.98	0.00	0.00	0.00	0.68	0.17	-0.30
6	30.00		0.72	0.17	-0.3[illegible]	0.01	0.00	-0.01
	6.03	0.90E+06	0.73	0.10	-0.3[illegible]	0.00	0.00	-0.01
	0.00	87.86	0.00	0.00	0.00	0.74	0.18	-0.32
7	30.12		0.81	0.20	-0.34	0.01	0.00	0.00
	8.07	0.90E+06	0.83	0.08	-0.34	0.01	0.00	0.00
	0.00	85.46	0.00	0.00	0.00	0.83	0.21	-0.33
8	29.88		1.03	0.28	-0.40	0.01	0.00	0.00
	12.04	0.90E+06	1.06	0.08	-0.40	0.01	0.00	0.00
	0.00	87.06	0.00	0.00	0.00	1.05	0.30	-0.38
9	30.00		1.15	0.40	-0.42	0.01	0.00	-0.01
	16.03	0.90E+06	1.21	0.07	-0.42	0.00	0.00	-0.01
	0.00	88.96	0.00	0.00	0.00	1.16	0.42	-0.41
10	29.77		1.21	0.48	-0.48	0.00	0.00	0.00
	18.02	0.90E+06	1.30	0.08	-0.48	0.00	0.00	0.00
	0.00	88.75	0.00	0.00	0.00	1.22	0.51	-0.45
11	29.54		1.16	0.50	-0.48	0.01	0.01	-0.03
	22.07	0.95E+06	1.30	0.11	-0.48	0.01	0.01	-0.03
	0.00	88.42	0.00	0.00	0.00	1.18	0.61	-0.45

PROPULSIVE WING FORCE DATA

SUMMARY, RUN 282

PT	Q ALPHA BETA	REY NO WEIGHT	CL1S CRF1B CNUC	CD1S CAF1B CNUA	CPN1S CPN1B CNUT	CRN1S CRN1B CL1R	CYN1S CYN1B CD1R	CSF1S CSF1B CN1R
1	10.23		0.96	-0.03	-0.00	0.01	0.01	-0.03
	-2.01	0.90E+06	0.96	0.00	-0.00	0.01	0.01	-0.03
	0.00	87.13	0.00	0.49	0.49	0.71	0.10	-0.44
2	10.12		1.10	0.00	-0.73	0.01	0.01	-0.03
	0.03	0.90E+06	1.10	0.00	-0.73	0.01	0.01	-0.03
	0.00	88.53	0.00	0.49	0.49	0.81	0.22	-0.48
3	10.12		1.18	0.03	-0.74	0.01	0.01	-0.03
	2.02	0.90E+06	1.18	-0.01	-0.74	0.01	0.01	-0.03
	0.00	87.01	0.00	0.49	0.49	0.88	0.24	-0.50
4	10.12		1.28	0.07	-0.76	0.01	0.01	-0.03
	4.06	0.90E+06	1.28	-0.02	-0.76	0.01	0.01	-0.03
	0.00	87.41	0.00	0.49	0.49	0.97	0.27	-0.51
5	10.00		1.40	0.11	-0.79	0.01	0.01	-0.04
	6.05	0.90E+06	1.40	-0.04	-0.79	0.01	0.01	-0.04
	0.00	87.83	0.00	0.50	0.50	1.08	0.30	-0.54
6	10.12		1.48	0.16	-0.80	0.01	0.01	-0.0[illegible]
	8.07	0.90E+06	1.48	-0.05	-0.80	0.01	0.01	-0.0[illegible]
	0.00	87.41	0.00	0.49	0.49	1.16	0.33	-0.56
7	9.88		1.63	0.33	-0.95	0.02	0.01	-0.05
	12.06	0.90E+06	1.66	-0.06	-0.95	0.01	0.01	-0.05
	0.00	87.79	0.00	0.50	0.50	1.50	0.48	-0.70
8	10.00		1.76	0.31	-0.90	0.02	0.01	-0.06
	12.06	0.90E+06	1.79	-0.07	-0.90	0.01	0.01	-0.06
	0.00	87.70	0.00	0.50	0.50	1.43	0.48	-0.85
9	9.88		1.82	0.42	-0.85	0.00	0.01	-0.05
	16.07	0.90E+06	1.86	-0.06	-0.85	0.00	0.01	-0.05
	0.00	87.00	0.00	0.51	0.51	1.47	0.56	-0.60
10	9.88		1.81	0.49	-0.86	0.01	0.01	-0.04
	18.02	0.90E+06	1.86	-0.09	-0.86	0.00	0.01	-0.04
	0.00	87.79	0.00	0.51	0.51	1.48	0.61	-0.61
11	9.54		1.99	0.71	-0.82	0.01	0.02	-0.05
	22.06	0.94E+06	2.11	-0.00	-0.82	0.00	0.02	-0.05
	0.00	88.02	0.00	0.52	0.52	1.82	0.81	-0.68

PROPULSIVE WING FORCE DATA

SUMMARY, RUN 283

PT	Q ALPHA BETA	REY NO HEIGHT	CL15 CRF10 CNUC	CD15 CAF10 CNUU	CPN15 CPN10 CNUT	CRN15 CRN10 CLTR	CYN15 CYN10 CDTR	CSF15 CSF10 CNTR
1	10.12		1.01	-0.03	-0.72	0.01	-0.01	-0.05
	-2.00	0.50E+06	1.01	0.01	-0.72	0.01	-0.01	-0.05
	5.02	87.30	0.00	0.40	0.40	0.73	0.26	-0.46
2	10.12		1.10	0.00	-0.74	0.00	-0.01	-0.06
	-0.02	0.50E+06	1.10	0.00	-0.74	0.00	-0.01	-0.06
	5.02	87.01	0.00	0.40	0.40	0.81	0.22	-0.50
3	10.12		1.18	0.03	-0.73	0.00	-0.01	-0.06
	2.03	0.50E+06	1.18	-0.01	-0.73	0.00	-0.01	-0.06
	5.02	86.13	0.00	0.40	0.40	0.88	0.24	-0.48
4	10.12		1.30	0.07	-0.77	0.00	0.00	-0.07
	4.00	0.50E+06	1.30	-0.02	-0.77	0.00	0.00	-0.07
	5.02	87.94	0.00	0.40	0.40	0.98	0.27	-0.52
5	10.00		1.37	0.11	-0.78	0.00	-0.01	-0.08
	6.04	0.50E+06	1.37	-0.04	-0.78	0.00	-0.01	-0.08
	5.02	87.02	0.00	0.50	0.50	1.05	0.30	-0.53
6	10.23		1.51	0.17	-0.83	0.01	-0.01	-0.08
	8.02	0.50E+06	1.52	-0.04	-0.83	0.01	-0.01	-0.08
	5.02	87.00	0.00	0.40	0.40	1.10	0.34	-0.50
7	10.12		1.77	0.31	-0.88	0.00	-0.01	-0.08
	12.04	0.50E+06	1.75	-0.07	-0.88	0.00	-0.01	-0.08
	5.02	86.90	0.00	0.40	0.40	1.43	0.46	-0.05
8	9.00		1.82	0.43	-0.87	-0.01	-0.01	-0.08
	16.07	0.55E+06	1.87	-0.08	-0.87	-0.01	-0.02	-0.08
	5.02	86.80	0.00	0.51	0.51	1.47	0.56	-0.02
9	9.00		1.82	0.50	-0.85	-0.01	-0.02	-0.08
	18.11	0.55E+06	1.88	-0.09	-0.85	-0.01	-0.02	-0.08
	5.02	87.11	0.00	0.51	0.51	1.46	0.82	-0.08
10	9.08		1.94	0.88	-0.91	-0.01	-0.02	-0.12
	22.08	0.55E+06	2.05	-0.08	-0.91	-0.01	-0.02	-0.12
	5.02	90.17	0.00	0.52	0.52	1.57	0.78	-0.06

PROPULSIVE WING FORCE DATA

SUMMARY, RUN 284

PT	Q ALPHA BETA	REY NO HEIGHT	CL15 CRF10 CNUC	CD15 CAF10 CNUU	CPN15 CPN10 CNUT	CRN15 CRN10 CLTR	CYN15 CYN10 CDTR	CSF15 CSF10 CNTR
1	5.06		1.38	-0.23	-1.01	0.01	0.00	-0.00
	-2.04	0.40E+06	1.37	-0.18	-1.01	0.01	0.00	-0.00
	5.02	87.13	0.00	0.00	0.00	0.70	0.23	-0.51
2	4.94		1.51	-0.10	-1.02	0.00	0.00	-0.00
	0.00	0.30E+06	1.51	-0.10	-1.02	0.00	0.00	-0.00
	5.02	87.00	0.00	1.02	1.02	0.91	0.26	-0.52
3	5.00		1.57	-0.15	-1.03	0.00	0.00	-0.00
	2.00	0.40E+06	1.57	-0.21	-1.03	0.00	0.00	-0.00
	5.02	87.03	0.00	1.00	1.00	0.97	0.27	-0.54
4	4.94		1.00	-0.11	-1.05	0.00	0.00	-0.00
	4.03	0.30E+06	1.07	-0.23	-1.05	0.00	0.00	-0.00
	5.02	87.25	0.00	1.02	1.02	1.08	0.30	-0.55
5	5.00		1.77	-0.05	-1.05	0.00	0.00	-0.10
	6.02	0.40E+06	1.75	-0.24	-1.05	0.00	0.00	-0.10
	5.02	87.42	0.00	0.00	0.00	1.14	0.32	-0.56
6	5.06		1.00	0.01	-1.08	0.01	0.00	-0.11
	8.05	0.40E+06	1.05	-0.25	-1.08	0.01	0.00	-0.11
	5.02	87.60	0.00	0.00	0.00	1.22	0.36	-0.50
7	4.94		2.10	0.16	-1.10	0.00	0.00	-0.12
	12.00	0.30E+06	2.17	-0.30	-1.10	0.00	0.00	-0.12
	5.02	87.40	0.00	1.02	1.02	1.51	0.48	-0.06
8	4.94		2.24	0.30	-1.14	-0.01	-0.01	-0.11
	16.04	0.30E+06	2.24	-0.33	-1.14	-0.01	-0.01	-0.11
	5.02	87.54	0.00	1.02	1.02	1.54	0.57	-0.04
9	4.03		2.35	0.40	-1.18	-0.01	-0.01	-0.12
	18.00	0.30E+06	2.38	-0.34	-1.18	-0.01	-0.01	-0.12
	5.02	87.46	0.00	1.04	1.04	1.62	0.85	-0.08
10	4.71		2.51	0.53	-1.25	-0.01	-0.01	-0.15
	22.03	0.30E+06	2.57	-0.38	-1.25	1.30	-0.02	-0.15
	5.02	99.14	0.00	1.07	1.07	1.75	0.83	-0.73

PROPULSIVE WING FORCE DATA

SUMMARY, RUN 206

PT	Q ALPHA BETA	REY NO HEIGHT	CL15 CSF10 CNWC	CD15 CAF10 CNWW	CPM15 CPM10 CNWT	CRM15 CRM10 CLTR	CYM15 CYM10 CDTR	CSF15 CSF10 CNTR
1	5.06 -2.00 0.00	0.40E+06 87.44	1.36 1.37 0.00	-0.23 -0.10 0.00	-0.07 -0.07 0.00	0.00 0.00 0.79	0.01 0.01 0.23	-0.03 -0.03 -0.48
2	5.06 -0.01 0.00	0.40E+06 50.05	1.49 1.49 0.00	-0.20 -0.20 0.00	-1.02 -1.02 0.00	0.00 0.00 0.01	0.01 0.01 0.24	-0.04 -0.04 -0.52
3	5.06 2.05 0.00	0.40E+06 87.17	1.57 1.56 0.00	-0.15 -0.71 1.00	-1.03 -1.03 1.00	0.01 0.00 0.98	0.01 0.01 0.27	-0.04 -0.04 -0.54
4	4.04 4.05 0.00	0.30E+06 85.00	1.73 1.72 0.00	-0.11 -0.23 1.02	-1.00 -1.00 1.02	0.01 0.00 1.10	0.02 0.02 0.30	-0.07 -0.07 -0.58
5	4.04 5.03 0.00	0.30E+06 88.52	1.88 1.85 0.00	-0.08 -0.25 1.02	-1.13 -1.13 1.02	0.01 0.01 1.22	0.01 0.02 0.33	-0.07 -0.07 -0.62
6	4.04 6.07 0.00	0.30E+06 88.42	1.90 1.88 0.00	0.00 -0.27 1.02	-1.11 -1.11 1.02	0.01 0.01 1.24	0.01 0.01 0.36	-0.08 -0.08 -0.64
7	4.04 12.02 -0.01	0.30E+06 87.32	2.24 2.23 0.00	0.17 -0.30 1.02	-1.10 -1.10 1.02	0.01 0.01 1.58	0.02 0.02 0.48	-0.08 -0.08 -0.88
8	5.06 16.00 -0.01	0.40E+06 37.84	2.23 2.23 0.00	0.29 -0.33 1.00	-1.15 -1.15 1.00	0.00 0.00 1.55	0.02 0.02 0.58	-0.10 -0.10 -0.88
9	5.06 18.01 -0.01	0.40E+06 87.82	2.23 2.24 0.00	0.38 -0.33 1.00	-1.06 -1.06 1.00	0.00 0.00 1.54	0.01 0.01 0.82	-0.07 -0.07 -0.58
10	5.06 22.06 -0.01	0.40E+06 98.27	2.41 2.47 0.00	0.83 -0.22 1.00	-1.10 -1.10 1.00	0.00 0.00 1.00	0.01 0.01 0.82	-0.06 -0.06 -0.76

PROPULSIVE WING FORCE DATA

SUMMARY, RUN 206

PT	Q ALPHA BETA	REY NO HEIGHT	CL15 CSF10 CNWC	CD15 CAF10 CNWW	CPM15 CPM10 CNWT	CRM15 CRM10 CLTR	CYM15 CYM10 CDTR	CSF15 CSF10 CNTR
1	2.53 -2.07 0.00	0.30E+06 87.55	2.05 2.07 0.00	-0.06 -0.01 2.00	-1.50 -1.50 2.00	0.00 0.00 0.01	0.03 0.03 0.25	-0.06 -0.06 -0.51
2	2.53 -0.01 0.00	0.30E+06 80.29	2.18 2.18 0.00	-0.02 -0.02 1.99	-1.50 -1.50 1.00	0.00 0.00 0.06	0.02 0.02 0.27	-0.06 -0.06 -0.51
3	2.41 2.04 0.00	0.27E+06 87.03	2.41 2.38 0.00	-0.50 -0.08 2.00	-1.52 -1.52 2.00	0.00 0.00 1.15	0.02 0.02 0.29	-0.06 -0.08 -0.50
4	2.41 4.01 0.00	0.27E+06 88.30	2.55 2.50 0.00	-0.53 -0.71 2.00	-1.05 -1.05 2.00	0.00 0.00 1.25	0.03 0.03 0.31	-0.11 -0.11 -0.02
5	2.53 5.06 0.00	0.30E+06 87.01	2.65 2.60 0.00	-0.43 -0.60 1.99	-1.50 -1.50 1.99	0.00 0.00 1.19	0.02 0.02 0.32	-0.11 -0.11 -0.50
6	2.53 8.05 0.00	0.30E+06 88.02	2.73 2.68 0.00	-0.32 -0.70 2.00	-1.03 -1.03 2.00	0.00 0.00 1.44	0.02 0.02 0.39	-0.11 -0.11 -0.64
7	2.53 12.07 0.00	0.30E+06 87.29	2.81 2.82 0.00	-0.18 -0.75 1.99	-1.05 -1.05 1.99	0.01 0.00 1.58	0.02 0.02 0.48	-0.15 -0.15 -0.80
8	2.41 16.11 -0.01	0.27E+06 88.43	2.90 2.85 0.00	-0.02 -0.84 2.00	-1.03 -1.03 2.00	0.00 -0.01 1.53	0.02 0.02 0.53	-0.15 -0.15 -0.80
9	2.05 18.02 -0.01	0.20E+06 87.12	3.01 2.91 0.00	0.16 -0.78 1.91	-1.03 -1.03 1.91	0.00 0.00 1.68	0.02 0.02 0.02	-0.13 -0.13 -0.60
10	2.53 22.10 -0.01	0.30E+06 99.44	3.20 3.11 0.00	0.60 -0.83 2.00	-1.08 -1.08 2.00	0.00 -0.01 1.77	0.03 0.03 0.78	-0.18 -0.18 -0.80

PROPULSIVE WING FORCE DATA

SUMMARY, RUN 207

PT	Q ALPHA BETA	REY NO HEIGHT	CL1S CDF1S CMUC	CD1S CAF1S CMAM	CPM1S CPN1S CMNT	CBM1S CBN1S CLTR	CYM1S CYN1S CDTR	CSF1S CSF1S CMTR
1	2.76		1.98	-0.02	-1.43	0.00	0.01	-0.10
	-2.06	0.20E+06	1.87	-0.96	-1.43	0.00	0.01	-0.10
	5.01	87.44	0.00	1.04	1.04	0.90	0.23	-0.52
2	2.86		2.07	-0.56	-1.51	0.00	0.01	-0.12
	0.00	0.20E+06	2.07	-0.56	-1.51	0.00	0.01	-0.13
	5.01	88.48	0.00	1.01	1.01	0.94	0.27	-0.57
3	2.86		2.20	-0.53	-1.51	0.00	0.01	-0.12
	2.10	0.20E+06	2.26	-0.01	-1.51	0.00	0.01	-0.12
	5.01	88.30	0.00	1.01	1.01	1.12	0.28	-0.57
4	2.76		2.26	-0.44	-1.47	0.00	0.01	-0.12
	4.00	0.20E+06	2.22	-0.00	-1.47	0.00	0.01	-0.12
	5.01	87.30	0.00	1.04	1.04	1.12	0.29	-0.58
5	2.76		2.32	-0.38	-1.48	0.00	0.01	-0.12
	6.07	0.20E+06	2.27	-0.02	-1.48	0.00	0.01	-0.12
	5.01	88.25	0.00	1.04	1.04	1.16	0.31	-0.57
6	2.53		2.70	-0.33	-1.04	0.01	0.01	-0.16
	8.07	0.20E+06	2.63	-0.70	-1.04	0.01	0.01	-0.16
	5.01	88.14	0.00	2.00	2.00	1.41	0.38	-0.05
7	2.53		2.94	-0.14	-1.08	0.00	0.00	-0.15
	12.06	0.20E+06	2.86	-0.75	-1.08	0.00	0.00	-0.15
	5.01	87.90	0.00	1.90	1.90	1.61	0.48	-0.08
8	2.41		3.10	0.01	-1.70	-0.01	0.00	-0.20
	16.04	0.27E+06	2.98	-0.86	-1.70	-0.01	-0.01	-0.20
	5.01	87.66	0.00	2.00	2.00	1.86	0.58	-0.75
9	2.41		3.18	0.13	-1.72	-0.01	-0.01	-0.18
	18.04	0.27E+06	3.05	-0.86	-1.72	-0.01	-0.01	-0.18
	5.01	56.95	0.00	2.00	2.00	1.70	0.63	-0.66
10	2.41		3.31	0.40	-1.79	-0.02	-0.01	-0.19
	22.02	0.27E+06	3.22	-0.87	-1.79	-0.01	-0.01	-0.19
	5.01	99.21	0.00	2.00	2.00	1.82	0.80	-0.75

PROPULSIVE WING FORCE DATA

SUMMARY, RUN 208

PT	Q ALPHA BETA	REY NO HEIGHT	CL1S CDF1S CMUC	CD1S CAF1S CMAM	CPM1S CPN1S CMNT	CBM1S CBN1S CLTR	CYM1S CYN1S CDTR	CSF1S CSF1S CMTR
1	29.88		0.38	0.11	-0.27	0.01	-0.02	-0.02
	-2.06	0.90E+06	0.33	0.12	-0.27	0.00	-0.02	-0.02
	5.01	87.56	0.00	0.00	0.00	0.41	0.12	-0.26
2	30.12		0.46	0.12	-0.28	0.00	-0.02	-0.01
	0.02	0.90E+06	0.46	0.12	-0.28	0.00	-0.02	-0.01
	5.01	88.18	0.00	0.00	0.00	0.48	0.13	-0.27
3	30.12		0.55	0.12	-0.29	0.00	-0.02	-0.02
	2.05	0.90E+06	0.55	0.12	-0.29	0.00	-0.02	-0.02
	5.01	87.95	0.00	0.00	0.00	0.57	0.15	-0.28
4	30.12		0.54	0.13	-0.28	0.00	-0.02	-0.02
	2.05	0.90E+06	0.55	0.11	-0.28	0.00	-0.02	-0.02
	5.01	87.95	0.00	0.00	0.00	0.58	0.15	-0.27
5	30.00		0.66	0.15	-0.31	0.00	-0.02	-0.02
	4.04	0.90E+06	0.66	0.11	-0.31	0.00	-0.02	-0.02
	5.01	87.42	0.00	0.00	0.00	0.67	0.17	-0.31
6	30.00		0.74	0.18	-0.34	0.00	-0.02	-0.03
	6.06	0.90E+06	0.75	0.10	-0.34	0.00	-0.02	-0.03
	5.01	87.01	0.00	0.00	0.00	0.76	0.18	-0.33
7	30.00		0.81	0.20	-0.35	0.00	-0.02	-0.03
	8.07	0.90E+06	0.83	0.00	-0.35	0.00	-0.02	-0.03
	5.01	88.17	0.00	0.00	0.00	0.83	0.21	-0.34
8	29.88		1.01	0.28	-0.38	0.00	-0.02	-0.04
	12.06	0.90E+06	1.05	0.06	-0.38	0.00	-0.03	-0.04
	5.01	87.85	0.00	0.00	0.00	1.03	0.28	-0.37
9	30.00		1.15	0.41	-0.44	-0.01	-0.03	-0.05
	16.05	0.90E+06	1.22	0.06	-0.44	0.00	-0.03	-0.05
	5.01	88.81	0.00	0.00	0.00	1.17	0.43	-0.43
10	30.00		1.18	0.48	-0.42	-0.01	-0.02	-0.06
	18.06	0.90E+06	1.26	0.00	-0.42	-0.01	-0.02	-0.06
	5.01	87.53	0.00	0.00	0.00	1.18	0.50	-0.42
11	30.12		1.14	0.50	-0.45	-0.03	0.00	-0.06
	22.06	0.90E+06	1.27	0.11	-0.45	-0.02	-0.01	-0.06
	5.01	98.29	0.00	0.00	0.00	1.15	0.60	-0.44

PROPULSIVE WING FORCE DATA

SUMMARY, RUN 200

PT	Q ALPHA BETA	REY NO HEIGHT	CL15 CSF16 CNWC	CD15 CAF16 CNWH	CPM15 CPM16 CNWT	CBM15 CBM16 CLTD	CYM15 CYM16 CDTD	CSF15 CSF16 CNTD
2	0.00		3.42	-4.31	-195.00	-7.88	23.02	-2.47
	-0.03	0.30E+06	3.42	-4.30	-195.00	-7.88	23.02	-2.47
	5.00	87.38	0.00	8.02	8.02	11.39	0.46	-152.00
3	0.00		17.08	-13.08	-402.00	-16.48	43.71	-4.00
	-0.04	0.30E+06	17.07	-13.08	-402.00	-16.46	43.73	-4.00
	5.00	87.38	0.00	33.75	33.75	5.11	-1.54	-400.70
4	0.00		33.17	-26.21	-953.00	-38.80	43.33	-4.20
	-0.06	0.30E+06	33.26	-26.17	-953.00	-38.75	43.37	-4.20
	5.00	87.38	0.00	63.40	63.40	2.56	-3.91	-920.70
5	0.00		56.70	-42.02	-1563.00	-80.20	40.34	-4.38
	-0.08	0.30E+06	56.83	-41.93	-1563.00	-80.12	40.43	-4.38
	5.00	87.38	0.00	95.00	95.00	14.16	-7.07	-1464.00
6	0.00		87.07	-52.00	-1806.00	-70.50	100.40	-7.30
	-0.10	0.30E+06	87.10	-52.37	-1806.00	-70.41	100.50	-7.30
	5.00	87.38	0.00	134.00	134.00	20.21	-0.99	-1753.00

PROPULSIVE WING FORCE DATA

SUMMARY, RUN 200

PT	Q ALPHA BETA	REY NO HEIGHT	CL15 CSF16 CNWC	CD15 CAF16 CNWH	CPM15 CPM16 CNWT	CBM15 CBM16 CLTD	CYM15 CYM16 CDTD	CSF15 CSF16 CNTD
2	0.00		20.15	-21.33	-751.00	-30.63	20.32	-2.20
	-0.06	0.30E+06	20.16	-21.20	-751.00	-30.00	20.25	-2.20
	5.00	87.07	0.00	44.37	44.37	13.16	-7.07	-737.00
3	0.00		30.72	-28.40	-1024.00	-43.84	32.30	-2.50
	-0.07	0.30E+06	30.75	-28.41	-1024.00	-43.80	32.35	-2.50
	5.00	87.07	0.00	60.00	60.00	14.83	-10.50	-1004.00
4	0.00		40.41	-35.01	-1290.00	-52.41	31.00	-2.80
	-0.08	0.30E+06	40.46	-35.04	-1290.00	-52.37	31.47	-2.80
	5.00	87.07	0.00	75.00	75.00	18.21	-13.26	-1373.00
5	0.00		50.42	-43.30	-1500.00	-63.02	26.57	-2.37
	-0.08	0.30E+06	50.40	-43.21	-1500.00	-62.97	26.07	-2.37
	5.00	87.07	0.00	92.47	92.47	22.34	-15.40	-1530.00

PROPULSIVE WING FORCE DATA

SUMMARY. RUN 201

PT	Q ALPHA BETA	REY NO WEIGHT	CL15 CNF10 CNUC	CD15 CAF10 CNUH	CPM15 CPM10 CNUT	CNM15 CNM10 CLTR	CYM15 CYM10 CDTR	CSF15 CSF10 CNTR
2	30.23		0.41	0.11	-0.20	0.30	-0.02	-0.01
	-2.04	0.90E+06	0.40	0.12	-0.28	0.00	-0.02	-0.01
	5.00	87.51	0.00	0.00	0.00	0.43	0.12	-0.27
3	30.23		0.48	0.12	-0.30	0.00	-0.02	-0.01
	0.04	0.90E+06	0.48	0.12	-0.30	0.00	-0.02	-0.01
	5.00	87.48	0.00	0.00	0.00	0.51	0.13	-0.29
4	30.23		0.56	0.14	-0.32	0.00	-0.02	-0.02
	2.07	0.90E+06	0.56	0.12	-0.32	0.00	-0.02	-0.02
	5.00	87.34	0.00	0.00	0.00	0.60	0.15	-0.31
5	30.23		0.67	0.15	-0.33	-0.01	-0.02	-0.02
	4.03	0.90E+06	0.66	0.11	-0.33	0.00	-0.02	-0.02
	5.00	87.08	0.00	0.00	0.00	0.68	0.17	-0.32
6	30.12		0.76	0.18	-0.35	-0.01	-0.02	-0.02
	6.06	0.90E+06	0.77	0.10	-0.35	-0.01	-0.02	-0.02
	5.00	86.82	0.00	0.00	0.00	0.76	0.19	-0.35
7	30.12		0.84	0.20	-0.38	-0.01	-0.02	-0.02
	8.04	0.90E+06	0.86	0.08	-0.36	0.00	-0.02	-0.02
	5.00	87.72	0.00	0.00	0.00	0.86	0.21	-0.35
8	30.00		1.04	0.28	-0.40	-0.01	-0.02	-0.03
	12.06	0.90E+06	1.06	0.05	-0.40	0.00	-0.02	-0.03
	5.00	87.86	0.00	0.00	0.00	1.06	0.28	-0.40
9	29.88		1.13	0.40	-0.42	-0.01	-0.02	-0.05
	15.98	0.90E+06	1.29	0.07	-0.42	0.00	-0.03	-0.05
	5.00	87.43	0.00	0.00	0.00	1.15	0.42	-0.42
10	29.88		1.15	0.47	-0.47	-0.01	-0.02	-0.06
	18.06	0.90E+06	1.24	0.00	-0.47	-0.01	-0.02	-0.06
	5.00	83.84	0.00	0.00	0.00	1.17	0.48	-0.46
11	30.00		1.15	0.50	-0.46	-0.03	-0.01	-0.05
	22.08	0.90E+06	1.20	0.10	-0.46	-0.02	-0.02	-0.05
	5.00	80.54	0.00	0.00	0.00	1.17	0.60	-0.45

PROPULSIVE WING FORCE DATA

SUMMARY. RUN 202

PT	Q ALPHA BETA	REY NO WEIGHT	CL15 CNF10 CNUC	CD15 CAF10 CNUH	CPM15 CPM10 CNUT	CNM15 CPM10 CLTR	CYM15 CYM10 CDTR	CSF15 CSF10 CNTR
1	30.00		0.40	0.11	-0.20	0.00	0.00	0.01
	-2.04	0.90E+06	0.40	0.12	-0.20	0.00	0.00	0.01
	0.00	87.73	0.00	0.00	0.00	0.43	0.12	-0.27
2	30.00		0.48	0.12	-0.30	0.00	0.00	0.00
	-0.01	0.90E+06	0.48	0.12	-0.30	0.00	0.00	0.00
	0.00	87.87	0.00	0.00	0.00	0.51	0.13	-0.29
3	30.00		0.56	0.13	-0.31	0.00	0.00	0.01
	2.01	0.90E+06	0.56	0.11	-0.31	0.00	0.00	0.01
	0.00	87.66	0.00	0.00	0.00	0.60	0.15	-0.30
4	30.00		0.66	0.15	-0.33	0.00	0.00	0.00
	4.03	0.90E+06	0.67	0.10	-0.33	0.00	0.00	0.00
	0.00	87.68	0.00	0.00	0.00	0.68	0.18	-0.32
5	30.12		0.75	0.17	-0.34	0.00	0.00	0.00
	6.03	0.90E+06	0.76	0.08	-0.34	0.00	0.00	0.00
	0.00	87.42	0.00	0.00	0.00	0.77	0.18	-0.34
6	30.12		0.84	0.19	-0.36	0.00	0.00	0.01
	8.05	0.90E+06	0.86	0.08	-0.36	0.00	0.00	0.01
	0.00	87.44	0.00	0.00	0.00	0.86	0.21	-0.35
7	30.00		1.05	0.28	-0.40	0.00	0.00	0.00
	12.07	0.90E+06	1.08	0.05	-0.40	0.00	0.00	0.00
	0.00	86.52	0.00	0.00	0.00	1.06	0.29	-0.38
8	29.88		1.18	0.41	-0.42	0.00	0.00	0.00
	16.10	0.90E+06	1.23	0.07	-0.42	0.00	0.00	0.00
	0.00	87.88	0.00	0.00	0.00	1.18	0.42	-0.42
9	30.12		1.18	0.47	-0.43	0.00	0.00	0.00
	18.05	0.90E+06	1.27	0.06	-0.43	0.00	0.00	0.00
	0.00	88.10	0.00	0.00	0.00	1.20	0.49	-0.42
10	30.00		1.19	0.50	-0.48	0.00	0.00	0.00
	22.08	0.90E+06	1.22	0.11	-0.48	0.00	0.00	0.00
	0.00	88.39	0.00	0.00	0.00	1.20	0.61	-0.45

PROPULSIVE WING FORCE DATA

SUMMARY, RUN 203

PT	Q ALPHA BETA	REY NO HEIGHT	CL15 CDF10 CNUC	CD15 CAF10 CNUM	CPN15 CPN10 CNUT	CBN15 CBN10 CLTR	CYN15 CYN10 CDTR	CSF15 CSF10 CNTR
29	12.10 -1.98 0.00	0.62E+06 82.33	1.24 1.24 0.00	0.02 0.06 0.46	-0.07 -0.07 0.46	-0.01 -0.01 0.93	0.00 0.00 0.25	0.00 0.00 -0.01
30	12.07 -0.02 0.00	0.62E+06 80.20	1.29 1.29 0.00	0.04 0.04 0.49	-0.06 -0.06 0.49	-0.01 -0.01 0.96	0.00 0.00 0.27	0.00 0.00 -0.00
31	12.07 2.03 0.00	0.62E+06 87.81	1.30 1.30 0.00	0.06 0.03 0.48	-0.06 -0.06 0.48	-0.01 -0.01 1.04	0.00 0.00 0.30	0.00 0.00 -0.02
32	12.07 3.98 0.00	0.62E+06 86.46	1.46 1.46 0.00	0.12 0.02 0.48	-0.06 -0.06 0.48	-0.01 -0.01 1.12	0.00 0.00 0.33	-0.01 -0.01 -0.04
33	11.96 5.01 0.00	0.62E+06 85.61	1.56 1.56 0.00	0.10 0.01 0.50	-0.02 -0.02 0.50	-0.01 -0.01 1.23	0.00 0.00 0.37	-0.01 -0.01 -0.06
34	11.96 5.01 0.00	0.62E+06 84.96	1.76 1.76 0.00	0.26 0.01 0.50	-1.00 -1.00 0.50	0.00 0.00 1.46	0.00 0.00 0.44	-0.01 -0.01 -0.74
35	11.94 12.03 0.00	0.62E+06 80.37	2.02 2.06 0.00	0.42 -0.01 0.51	-1.07 -1.07 0.51	0.00 0.00 1.64	0.00 0.00 0.56	-0.01 -0.01 -0.80
36	12.07 16.00 0.00	0.62E+06 85.78	1.93 1.98 0.00	0.51 -0.04 0.50	-0.95 -0.95 0.50	-0.01 -0.02 1.55	0.01 0.00 0.64	-0.01 -0.01 -0.88
37	11.94 17.98 0.00	0.62E+06 86.05	2.08 2.18 0.00	0.63 -0.04 0.51	-0.90 -0.90 0.51	-0.01 -0.02 1.88	0.01 0.01 0.75	-0.02 -0.02 -0.72
38	11.96 22.00 0.00	0.62E+06 88.80	2.14 2.30 0.00	0.63 -0.03 0.50	-0.90 -0.90 0.50	-0.02 -0.02 1.75	0.01 0.01 0.82	-0.01 -0.01 -0.73

PROPULSIVE WING FORCE DATA

SUMMARY, RUN 204

PT	Q ALPHA BETA	REY NO HEIGHT	CL15 CDF10 CNUC	CD15 CAF10 CNUM	CPN15 CPN10 CNUT	CBN15 CBN10 CLTR	CYN15 CYN10 CDTR	CSF15 CSF10 CNTR
1	0.00 -2.00 0.00	0.44E+06 83.97	1.06 1.07 0.00	-0.18 -0.12 0.06	-1.18 -1.18 0.06	-0.01 -0.01 1.04	0.00 0.00 0.30	-0.01 -0.01 -0.06
2	5.96 -0.01 0.00	0.44E+06 90.95	1.73 1.73 0.00	-0.14 -0.14 1.01	-1.20 -1.20 1.01	-0.01 -0.01 1.07	0.01 0.01 0.32	-0.01 -0.01 -0.07
3	5.96 2.02 0.00	0.44E+06 80.37	1.06 1.06 0.00	-0.16 -0.16 1.01	-1.18 -1.18 1.01	-0.01 -0.01 1.13	0.00 0.00 0.34	-0.01 -0.01 -0.08
4	5.96 4.01 0.00	0.44E+06 88.37	1.25 1.04 0.00	-0.05 -0.18 1.01	-1.20 -1.20 1.01	-0.02 -0.02 1.16	0.01 0.01 0.36	-0.03 -0.03 -0.08
5	5.96 5.99 0.00	0.44E+06 87.26	1.06 1.06 0.00	0.03 -0.18 1.00	-1.26 -1.26 1.00	-0.01 -0.01 1.26	0.01 0.01 0.42	-0.03 -0.03 -0.73
6	5.96 8.01 0.00	0.44E+06 85.92	2.11 2.10 0.00	0.10 -0.20 1.00	-1.26 -1.26 1.00	-0.01 -0.01 1.36	0.01 0.01 0.46	-0.03 -0.03 -0.73
7	5.96 11.99 0.00	0.44E+06 91.35	2.25 2.24 0.00	0.23 -0.24 1.00	-1.29 -1.29 1.00	-0.01 -0.02 1.51	0.01 0.01 0.56	-0.05 -0.05 -0.75
8	5.96 16.01 0.00	0.44E+06 83.51	2.22 2.34 0.00	0.40 -0.25 1.00	-1.23 -1.23 1.00	-0.02 -0.02 1.56	[illegible] [illegible] 0.67	-0.05 -0.05 -0.70
9	5.96 17.98 0.00	0.44E+06 85.81	2.40 2.44 0.00	0.52 -0.25 1.01	-1.25 -1.25 1.01	-0.02 -0.02 1.63	0.02 0.01 0.75	-0.04 -0.04 -0.72
10	5.96 21.96 0.00	0.44E+06 90.03	2.53 2.53 0.00	0.76 -0.24 1.00	-1.24 -1.24 1.00	-0.02 -0.02 1.74	0.02 0.02 0.84	-0.06 -0.06 -0.71

PROPULSIVE WING FORCE DATA

SUMMARY. RUN 296

PT	Q ALPHA BETA	REY NO HEIGHT	CL15 CDF15 CNWC	CD15 CAF15 CNWW	CPM15 CPM15 CNWT	CNM15 CNM15 CLTR	CYM15 CYM15 CDTR	CSF15 CSF15 CNTR
1	3.00		2.30	-0.04	-1.70	-0.01	0.01	-0.03
	-2.00	0.31E+06	2.40	-0.50	-1.70	-0.01	0.01	-0.03
	0.00	82.50	0.00	2.02	2.03	1.00	0.33	-0.00
2	3.00		2.51	-0.50	-1.82	-0.01	0.01	-0.01
	0.02	0.31E+06	2.51	-0.55	-1.82	-0.01	0.01	-0.01
	0.00	80.22	0.00	2.02	2.02	1.10	0.30	-0.75
3	3.00		2.61	-0.46	-1.84	-0.01	0.01	-0.05
	1.00	0.31E+06	2.50	-0.57	-1.84	-0.01	0.01	-0.05
	0.00	90.00	0.00	2.02	2.02	1.25	0.41	-0.77
4	3.00		2.00	-0.40	-1.81	-0.01	0.01	-0.04
	1.00	0.31E+06	2.56	-0.50	-1.81	-0.01	0.01	-0.04
	0.00	90.00	0.00	2.02	2.02	1.25	0.30	-0.74
5	2.00		2.07	-0.41	-1.70	-0.02	0.01	-0.03
	4.03	0.31E+06	2.03	-0.30	-1.70	-0.02	0.01	-0.03
	0.00	88.71	0.00	2.02	2.02	1.30	0.42	-0.72
6	2.00		2.73	-0.33	-1.86	-0.02	0.02	-0.00
	6.01	0.31E+06	2.06	-0.02	-1.86	-0.02	0.02	-0.00
	0.00	88.20	0.00	2.02	2.02	1.31	0.46	-0.70
7	2.02		2.04	-0.25	-1.85	-0.02	0.02	-0.00
	7.00	0.31E+06	2.70	-0.04	-1.85	-0.02	0.01	-0.00
	0.00	85.00	0.00	2.02	2.02	1.30	0.40	-0.77
8	2.00		2.96	-0.00	-1.78	-0.03	0.02	-0.00
	12.00	0.31E+06	2.07	-0.00	-1.78	-0.03	0.01	-0.00
	0.00	87.01	0.00	2.03	2.03	1.46	0.56	-0.71
9	2.00		3.05	0.14	-1.75	-0.03	0.02	-0.00
	16.00	0.31E+06	2.07	-0.70	-1.75	-0.03	0.02	-0.00
	0.00	87.07	0.00	2.02	2.02	1.52	0.66	-0.67
10	2.00		3.00	0.25	-1.66	-0.02	0.03	-0.10
	17.00	0.31E+06	2.02	-0.71	-1.66	-0.03	0.02	-0.10
	0.00	87.13	0.00	2.02	2.02	1.54	0.73	-0.61
11	2.00		3.31	0.53	-1.70	-0.02	0.04	-0.13
	21.00	0.31E+06	3.16	-0.71	-1.70	-0.04	0.03	-0.12
	0.00	88.10	0.00	2.02	2.02	1.63	0.90	-0.62

PROPULSIVE WING FORCE DATA

SUMMARY. RUN 296

PT	Q ALPHA BETA	REY NO HEIGHT	CL15 CDF15 CNWC	CD15 CAF15 CNWW	CPM15 CPM15 CNWT	CNM15 CNM15 CLTR	CYM15 CYM15 CDTR	CSF15 CSF15 CNTR
1	3.10		2.32	-0.63	-1.71	-0.03	0.00	-0.05
	-2.02	0.32E+06	2.34	-0.55	-1.71	-0.02	0.00	-0.05
	5.01	83.67	0.00	1.95	1.95	1.07	0.32	-0.67
2	3.10		2.37	-0.56	-1.70	-0.04	0.00	-0.05
	0.00	0.32E+06	2.37	-0.56	-1.70	-0.04	0.00	-0.05
	5.01	90.84	0.00	1.95	1.95	1.00	0.35	-0.00
3	3.10		2.46	-0.47	-1.74	-0.04	0.01	-0.00
	1.00	0.32E+06	2.44	-0.56	-1.74	-0.04	0.01	-0.00
	5.01	88.72	0.00	1.92	1.92	1.17	0.37	-0.72
4	3.10		2.00	-0.37	-1.64	-0.02	0.01	-0.00
	3.00	0.32E+06	2.02	-0.55	-1.64	-0.02	0.01	-0.00
	5.01	87.46	0.00	1.92	1.92	1.34	0.43	-0.02
5	2.00		2.04	-0.33	-1.00	-0.03	0.01	-0.11
	6.01	0.31E+06	2.70	-0.02	-1.00	-0.03	0.01	-0.11
	5.00	88.02	0.00	2.01	2.01	1.43	0.46	-0.00
6	2.00		2.00	-0.24	-1.07	-0.01	0.01	-0.15
	6.01	0.31E+06	2.04	-0.04	-1.07	-0.01	0.01	-0.15
	5.00	88.54	0.00	2.01	2.01	1.46	0.50	-0.00
7	2.07		3.04	-0.00	-1.02	-0.04	0.00	-0.11
	11.00	0.30E+06	2.95	-0.72	-1.02	-0.04	0.00	-0.11
	5.00	84.93	0.00	2.00	2.00	1.40	0.57	-0.70
8	2.07		3.05	0.1[illegible]	-1.02	-0.04	0.01	-0.15
	16.00	0.30E+06	2.07	-0.73	-1.02	-0.04	0.00	-0.15
	5.00	87.05	0.00	2.00	2.00	1.46	0.67	-0.71
9	2.00		3.06	0.25	-1.73	-0.04	0.01	-0.17
	16.01	0.31E+06	3.00	-0.71	-1.73	-0.04	0.00	-0.17
	5.00	87.06	0.00	2.00	2.00	1.53	0.73	-0.60
10	2.00		3.22	0.53	-1.74	-0.03	0.02	-0.20
	21.00	0.31E+06	3.16	-0.71	-1.74	-0.04	0.01	-0.20
	5.00	90.16	0.00	2.02	2.02	1.64	0.90	-0.67

PROPULSIVE WING FORCE DATA

SUMMARY, RUN 297

PT	Q ALPHA BETA	REY NO HEIGHT	CL15 CNF16 CNWC	CD15 CAF16 CNWW	CPM15 CPM16 CMWT	CBM15 CBM16 CLTR	CYM15 CYM16 CDTR	CSF15 CSF16 CNTR
1	5.00		1.82	-0.21	-1.19	-0.03	-0.01	-0.04
	-2.00	0.44E+06	1.83	-0.15	-1.15	-0.03	-0.01	-0.04
	5.01	80.08	0.00	0.00	0.00	0.00	0.20	-0.02
2	5.00		1.70	-0.15	-1.19	-0.03	-0.01	-0.04
	-0.01	0.44E+06	1.70	-0.15	-1.19	-0.03	-0.01	-0.04
	5.01	87.01	0.00	0.00	0.00	1.05	0.31	-0.06
3	5.00		1.00	-0.10	-1.21	-0.03	0.00	-0.00
	1.00	0.44E+06	1.00	-0.10	-1.21	-0.03	0.00	-0.00
	5.01	86.00	0.00	0.00	0.00	1.13	0.34	-0.00
4	5.00		1.83	-0.03	-1.24	-0.03	0.00	-0.00
	3.00	0.44E+06	1.82	-0.10	-1.24	-0.03	-0.01	-0.00
	5.01	86.37	0.00	0.00	0.00	1.25	0.38	-0.72
5	5.00		1.87	0.03	-1.23	-0.02	0.00	-0.00
	6.01	0.44E+06	1.90	-0.17	-1.23	-0.02	-0.01	-0.00
	5.00	86.02	0.00	0.07	0.07	1.28	0.41	-0.73
6	5.00		2.10	0.11	-1.32	-0.01	0.00	-0.10
	8.01	0.44E+06	2.16	-0.20	-1.32	-0.01	0.00	-0.10
	5.00	86.45	0.00	0.00	0.00	1.46	0.47	-0.80
7	5.00		2.24	0.23	-1.26	-0.03	-0.01	-0.07
	12.01	0.44E+06	2.24	-0.24	-1.26	-0.03	-0.01	-0.07
	5.00	85.17	0.00	0.00	0.00	1.51	0.55	-0.73
8	5.00		2.40	0.42	-1.27	-0.03	-0.01	-0.00
	16.01	0.43E+06	2.42	-0.26	-1.27	-0.03	-0.01	-0.00
	5.00	86.27	0.00	1.01	1.01	1.63	0.66	-0.73
9	5.00		2.45	0.53	-1.27	-0.04	-0.01	-0.00
	18.00	0.43E+06	2.49	-0.28	-1.27	-0.03	-0.02	-0.00
	5.00	88.71	0.00	1.01	1.01	1.67	0.77	-0.73
10	5.00		2.50	0.78	-1.28	-0.03	-0.01	-0.12
	22.00	0.43E+06	2.50	-0.24	-1.28	-0.03	-0.02	-0.12
	5.00	90.09	0.00	1.01	1.01	1.79	0.96	-0.74

PROPULSIVE WING FORCE DATA

SUMMARY, RUN 298

PT	Q ALPHA BETA	REY NO HEIGHT	CL15 CNF16 CNWC	CD15 CAF16 CNWW	CPM15 CPM16 CMWT	CBM15 CBM16 CLTR	CYM15 CYM16 CDTR	CSF15 CSF16 CNTR
1	12.10		1.25	0.02	-0.88	-0.02	-0.01	-0.02
	-2.00	0.62E+06	1.25	0.06	-0.88	-0.02	-0.01	-0.02
	5.01	82.75	0.00	0.00	0.00	0.94	0.26	-0.80
2	12.10		1.34	0.05	-0.88	-0.02	-0.01	-0.03
	0.01	0.62E+06	1.34	0.05	-0.88	-0.02	-0.01	-0.03
	5.01	87.11	0.00	0.00	0.00	1.01	0.28	-0.82
3	12.10		1.41	0.08	-0.90	-0.03	-0.01	-0.02
	1.98	0.62E+06	1.41	0.04	-0.90	-0.02	[illegible]	-0.02
	5.01	88.01	0.00	0.50	0.50	1.08	[illegible]	-0.83
4	12.10		1.46	0.13	-0.81	-0.02	-0.01	-0.04
	3.98	0.62E+06	1.47	0.03	-0.81	-0.02	-0.01	-0.04
	5.01	87.83	0.00	0.00	0.00	1.12	0.33	-0.85
5	12.07		1.61	0.10	-0.87	-0.01	-0.01	-0.05
	6.01	0.62E+06	1.62	0.02	-0.87	-0.01	-0.01	-0.05
	5.00	86.45	0.00	0.50	0.50	1.26	0.38	-0.70
6	12.07		1.80	0.23	-0.95	-0.02	-0.01	-0.03
	7.98	0.62E+06	1.71	0.00	-0.95	-0.01	-0.02	-0.03
	5.00	87.44	0.00	0.50	0.50	1.34	0.42	-0.80
7	11.84		1.90	0.37	-1.00	-0.02	-0.01	-0.04
	11.98	0.62E+06	1.94	-0.03	-1.00	-0.02	-0.02	-0.04
	5.00	88.01	0.00	0.51	0.51	1.53	0.53	-0.73
8	11.86		1.97	0.52	-0.99	-0.03	-0.01	-0.06
	15.98	0.62E+06	2.03	-0.04	-0.99	-0.03	-0.02	-0.06
	5.00	90.53	0.00	0.51	0.51	1.58	0.65	-0.72
9	11.98		2.00	0.61	-0.97	-0.03	-0.02	-0.06
	18.02	0.62E+06	2.00	-0.04	-0.97	-0.03	-0.02	-0.06
	5.00	87.52	0.00	0.50	0.50	1.61	0.73	-0.70
10	11.84		2.18	0.85	-1.04	-0.03	-0.01	-0.08
	22.00	0.62E+06	2.24	-0.03	-1.04	-0.02	-0.02	-0.08
	5.00	90.80	0.00	0.51	0.51	1.78	0.94	-0.77

PROPULSIVE WING FORCE DATA

SUMMARY, RUN 290

PT	Q ALPHA BETA	REY NO HEIGHT	CL1S CSF1B CRUC	CD1S CAF1B CRUM	CPM1S CPM1B CMUT	CNM1S CNM1B CLTR	CYM1S CYM1B CDTR	CSF1S CSF1B CNTR
2	30.00		0.40	0.12	-0.28	0.00	0.00	0.01
	-1.00	0.97E+06	0.40	0.13	-0.28	0.00	0.00	0.01
	0.00	70.00	0.00	0.00	0.00	0.30	0.14	-0.28
3	30.00		0.49	0.13	-0.30	0.00	0.00	0.02
	0.01	0.97E+06	0.49	0.13	-0.30	0.00	0.00	0.02
	0.00	88.74	0.00	0.00	0.00	0.47	0.15	-0.28
4	29.00		0.57	0.15	-0.32	0.00	0.00	0.01
	2.01	0.97E+06	0.58	0.13	-0.32	0.00	0.00	0.01
	0.00	88.78	0.00	0.00	0.00	0.56	0.16	-0.30
5	29.77		0.57	0.15	-0.32	0.00	0.00	0.01
	2.01	0.97E+06	0.58	0.13	-0.32	0.00	0.00	0.01
	0.00	88.78	0.00	0.00	0.00	0.56	0.16	-0.30
6	30.00		0.65	0.17	-0.33	0.00	0.00	0.01
	3.00	0.97E+06	0.68	0.12	-0.33	0.00	0.00	0.01
	0.00	87.14	0.00	0.00	0.00	0.64	0.18	-0.31
7	30.12		0.75	0.19	-0.35	0.00	0.00	0.01
	5.00	0.97E+06	0.77	0.11	-0.35	0.00	0.00	0.01
	-0.01	85.44	0.00	0.00	0.00	0.73	0.20	-0.33
8	30.00		0.82	0.21	-0.36	0.00	0.00	0.01
	6.02	0.97E+06	0.84	0.00	-0.36	0.00	0.00	0.01
	-0.01	87.55	0.00	0.00	0.00	0.80	0.22	-0.34
9	29.88		1.02	0.28	-0.40	0.00	0.00	0.01
	12.02	0.97E+06	1.08	0.07	-0.40	0.00	0.00	0.01
	0.00	88.12	0.00	0.00	0.00	1.01	0.30	-0.39
10	29.77		1.13	0.42	-0.43	0.00	0.00	0.01
	16.00	0.97E+06	1.20	0.00	-0.43	0.00	0.00	0.01
	-0.01	83.83	0.00	0.00	0.00	1.11	0.43	-0.41
11	29.77		1.18	0.50	-0.45	0.00	0.00	0.00
	18.00	0.97E+06	1.28	0.11	-0.45	0.00	0.00	0.00
	-0.01	88.55	0.00	0.00	0.00	1.17	0.51	-0.44
12	29.31		1.15	0.61	-0.43	0.01	0.00	0.00
	21.06	0.96E+06	1.29	0.13	-0.43	0.01	0.00	0.00
	-0.01	97.88	0.00	0.00	0.00	1.13	0.82	-0.41

PROPULSIVE WING FORCE DATA

SUMMARY, RUN 300

PT	Q ALPHA BETA	REY NO HEIGHT	CL1S CSF1B CRUC	CD1S CAF1B CRUM	CPM1S CPM1B CMUT	CNM1S CNM1B CLTR	CYM1S CYM1B CDTR	CSF1S CSF1B CNTR
1	29.88		0.41	0.12	-0.26	0.00	-0.01	-0.04
	-1.99	0.97E+06	0.40	0.13	-0.28	0.00	0.00	-0.04
	5.00	90.84	0.00	0.00	0.00	0.30	0.13	-0.28
2	30.23		0.49	0.13	-0.30	-0.01	0.00	-0.05
	-0.02	0.97E+06	0.49	0.13	-0.30	-0.01	0.00	-0.05
	5.00	87.46	0.00	0.00	0.00	0.47	0.15	-0.28
3	30.23		0.57	0.15	-0.32	-0.01	-0.01	-0.05
	2.03	0.97E+06	0.58	0.13	-0.32	-0.01	-0.01	-0.05
	5.00	88.38	0.00	0.30	0.00	0.56	0.16	-0.30
4	30.12		0.65	0.16	-0.33	-0.01	0.00	-0.05
	3.00	0.97E+06	0.68	0.12	-0.33	-0.01	-0.01	-0.05
	5.00	88.43	0.00	0.00	0.00	0.64	0.16	-0.31
5	30.00		0.73	0.18	-0.34	-0.01	0.00	-0.05
	5.99	0.97E+06	0.74	0.11	-0.34	-0.01	-0.01	-0.05
	5.00	88.07	0.00	0.00	0.00	0.71	0.20	-0.33
6	29.77		0.84	0.21	-0.37	-0.01	0.00	-0.05
	7.99	0.97E+06	0.88	0.00	-0.37	-0.01	-0.01	-0.05
	5.00	87.06	0.00	0.00	0.00	0.82	0.23	-0.35
7	29.00		1.04	0.29	-0.41	-0.01	-0.01	-0.06
	12.00	0.97E+06	1.08	0.07	-0.41	-0.01	-0.01	-0.06
	5.00	84.21	0.00	0.00	0.00	1.02	0.31	-0.40
8	29.66		1.10	0.41	-0.42	-0.01	-0.01	-0.06
	15.98	0.96E+06	1.18	0.00	-0.42	0.00	-0.02	-0.06
	5.00	88.17	0.00	0.00	0.00	1.00	0.42	-0.41
9	27.86		1.15	0.49	-0.44	-0.01	-0.02	-0.06
	17.99	0.96E+06	1.24	0.11	-0.44	-0.01	-0.02	-0.06
	5.00	88.98	0.00	0.00	0.00	1.13	0.50	-0.42
10	29.00		1.12	0.58	-0.44	-0.03	-0.02	-0.04
	22.03	0.97E+06	1.26	0.13	-0.44	-0.02	-0.03	-0.04
	5.00	98.26	0.00	0.00	0.00	1.10	0.00	-0.42

PROPULSIVE WING FORCE DATA

SUMMARY, RUN 301

PT	Q ALPHA BETA	REY NO HEIGHT	CL15 CSF16 CNUC	CD15 CAF16 CNUW	CPR15 CPR16 CNUT	CBR15 CBR16 CLTR	CYR15 CYR16 CDTR	CSF15 CSF16 CNTR
1	12.07		1.20	0.01	-0.06	-0.02	0.00	-5.00
	-1.00	0.02E+06	1.20	0.05	-0.06	-0.02	0.00	-0.00
	5.00	83.30	0.00	0.40	0.40	0.80	0.25	-0.50
2	12.07		1.30	0.05	-0.06	-0.03	0.00	-0.07
	0.00	0.02E+06	1.30	0.05	-0.06	-0.03	0.00	-0.07
	5.00	90.37	0.00	0.50	0.50	0.86	0.26	-0.62
3	12.07		1.40	0.00	-0.06	-0.02	0.00	-0.00
	2.02	0.02E+06	1.40	0.04	-0.06	-0.02	0.00	-0.00
	5.00	88.02	0.00	0.50	0.50	1.06	0.31	-0.04
4	12.07		1.46	0.13	-0.02	0.02	0.00	-0.00
	3.00	0.02E+06	1.46	0.03	-0.02	-0.02	0.00	-0.00
	5.00	87.52	0.00	0.50	0.50	1.11	0.34	-0.06
5	12.07		1.57	0.10	-0.04	-0.02	0.00	-0.00
	6.02	0.02E+06	1.58	0.02	-0.04	-0.02	0.00	-0.00
	5.00	87.50	0.00	0.50	0.50	1.23	0.38	-0.07
6	12.07		1.71	0.25	-0.06	-0.02	0.00	-0.00
	8.00	0.02E+06	1.73	0.01	-0.05	-0.02	0.00	-0.00
	5.00	86.00	0.00	0.50	0.50	1.35	0.44	-0.72
7	11.04		2.00	0.44	-1.10	0.02	0.00	-0.11
	12.00	0.01E+06	2.11	0.01	-1.10	0.02	0.00	-0.11
	5.00	80.45	0.00	0.51	0.51	1.60	0.60	-0.83
8	11.04		1.06	0.53	-0.07	-0.03	0.00	-0.00
	16.02	0.01E+06	2.02	-0.03	-0.07	-0.03	-0.01	-0.00
	5.00	80.95	0.00	0.51	0.51	1.57	0.67	-0.70
9	11.04		2.01	0.63	-0.07	-0.03	-0.01	-0.00
	18.00	0.01E+06	2.11	-0.02	-0.07	-0.03	-0.02	-0.00
	5.00	88.07	0.00	0.51	0.51	1.82	0.75	-0.70
10	11.04		2.10	0.80	-1.02	-0.03	-0.01	-0.11
	21.00	0.01E+06	2.33	-0.01	-1.02	-0.03	-0.02	-0.11
	5.00	90.00	0.00	0.51	0.51	1.76	0.86	-0.75

PROPULSIVE WING FORCE DATA

SUMMARY, RUN 302

PT	Q ALPHA BETA	REY NO HEIGHT	CL15 CSF16 CNUC	CD15 CAF16 CNUW	CPR15 CPR16 CNUT	CBR15 CBR16 CLTR	CYR15 CYR16 CDTR	CSF15 CSF16 CNTR
1	6.00		1.50	-0.10	-1.15	-0.03	0.00	-0.00
	-1.00	0.44E+06	1.59	-0.14	-1.15	-0.03	0.00	-0.00
	5.00	83.30	0.00	1.00	1.00	0.95	0.20	-0.02
2	5.00		1.70	-0.15	-1.20	-0.03	0.00	-0.00
	-0.01	0.44E+06	1.70	-0.15	-1.20	-0.03	0.00	-0.00
	5.00	90.34	0.00	1.01	1.01	1.04	0.32	-0.00
3	5.00		1.77	-0.00	-1.22	-0.03	0.00	-0.00
	2.03	0.44E+06	1.77	-0.15	-1.22	-0.03	0.00	-0.00
	5.00	91.72	0.00	1.02	1.02	1.09	0.35	-0.00
4	5.00		1.91	-0.02	-1.26	-0.03	0.01	-0.11
	4.01	0.44E+06	1.91	-0.16	-1.26	-0.03	0.01	-0.11
	5.00	89.13	0.00	1.01	1.01	1.22	0.40	-0.72
5	5.00		2.07	0.06	-1.33	-0.02	0.01	-0.12
	5.99	0.43E+06	2.06	-0.16	-1.33	-0.02	0.01	-0.12
	5.00	88.35	0.00	1.03	1.03	1.35	0.46	-0.78
6	5.00		2.16	0.13	-1.32	-0.01	0.01	-0.11
	7.99	0.44E+06	2.16	-0.17	-1.32	-0.01	0.00	-0.11
	5.00	88.50	0.00	1.02	1.02	1.44	0.50	-0.79
7	6.00		2.23	0.27	-1.27	-0.03	0.01	-0.10
	12.01	0.44E+06	2.23	-0.20	-1.27	-0.03	0.00	-0.10
	5.00	88.10	0.00	1.00	1.00	1.49	0.53	-0.75
8	5.00		2.37	0.46	-1.28	-0.03	0.00	-0.11
	18.01	0.43E+06	2.41	-0.21	-1.28	-0.03	-0.01	-0.11
	5.00	89.24	0.00	1.07	1.02	1.60	0.73	-0.74
9	5.00		2.41	0.57	-1.26	-0.04	0.00	-0.12
	17.98	0.43E+06	2.47	-0.21	-1.26	-0.04	-0.01	-0.12
	5.00	88.03	0.00	1.02	1.02	1.64	0.81	-0.72
10	5.00		2.53	0.81	-1.27	-0.04	0.00	-0.13
	22.00	0.43E+06	2.05	-0.20	-1.27	-0.03	-0.02	-0.13
	5.00	89.00	0.00	1.04	1.04	1.72	1.00	-0.72

PROPULSIVE WING FORCE DATA

SUMMARY, RUN 303

PT	Q ALPHA BETA	REY NO HEIGHT	CLIS CXFIB CNUC	CDIS CAFIB CNUH	CPNIS CPNIB CNUT	CBNIS CBNIB CLTR	CYNIS CYNIB CDTR	CSFIS CSFIB CNTR
1	3.10		2.27	-0.63	-1.80	-0.04	0.00	-0.10
	-2.00	0.31E+06	2.29	-0.55	-1.80	-0.04	0.00	-0.10
	5.00	82.31	0.00	1.85	1.95	1.02	0.32	-0.65
2	3.10		2.32	-0.54	-1.74	-0.04	0.00	-0.12
	0.01	0.31E+06	2.32	-0.54	-1.74	-0.04	0.00	-0.12
	5.00	82.57	0.00	1.97	1.97	1.03	0.37	-0.70
3	3.10		2.46	-0.47	-1.76	-0.05	0.00	-0.14
	1.99	0.31E+06	2.45	-0.58	-1.76	-0.05	0.00	-0.14
	5.00	84.00	0.00	1.97	1.97	1.15	0.39	-0.72
4	3.10		2.62	-0.35	-1.82	-0.03	0.01	-0.14
	4.01	0.31E+06	2.59	-0.53	-1.82	-0.03	0.00	-0.14
	5.00	85.88	0.00	1.96	1.96	1.27	0.47	-0.78
5	2.99		2.73	-0.29	-1.84	-0.04	0.01	-0.13
	5.99	0.31E+06	2.66	-0.57	-1.84	-0.04	0.00	-0.13
	5.00	86.89	0.00	2.05	2.05	1.30	0.51	-0.76
6	2.99		2.82	-0.18	-1.88	-0.02	0.01	-0.17
	7.99	0.31E+06	2.83	-0.56	-1.88	-0.02	0.01	-0.17
	5.00	87.86	0.00	2.05	2.05	1.46	0.57	-0.81
7	2.87		2.98	-0.03	-1.88	-0.04	0.00	-0.15
	11.99	0.30E+06	2.88	-0.64	-1.88	-0.04	-0.01	-0.15
	5.00	85.09	0.00	2.11	2.11	1.40	0.64	-0.74
8	2.87		3.12	0.24	-1.85	-0.05	0.01	-0.20
	15.99	0.30E+06	3.06	-0.63	-1.85	-0.05	0.00	-0.20
	5.00	80.78	0.00	2.10	2.10	1.54	0.78	-0.75
9	2.87		3.26	0.41	-1.80	-0.05	0.01	-0.22
	18.00	0.30E+06	3.23	-0.82	-1.80	-0.05	0.00	-0.22
	5.00	88.89	0.00	2.10	2.10	1.66	0.90	-0.78
10	2.87		3.36	0.67	-1.81	-0.05	0.01	-0.25
	21.99	0.30E+06	3.27	-0.80	-1.81	-0.05	0.00	-0.25
	5.00	90.11	0.00	2.08	2.08	1.63	1.05	-0.71

PROPULSIVE WING FORCE DATA

SUMMARY, RUN 304

PT	Q ALPHA BETA	REY NO HEIGHT	CLIS CXFIB CNUC	CDIS CAFIB CNUH	CPNIS CPNIB CNUT	CBNIS CBNIB CLTR	CYNIS CYNIB CDTR	CSFIS CSFIB CNTR
1	1.49		3.60	-1.55	-2.77	-0.07	-0.07	-0.10
	-2.00	0.22E+06	3.85	-1.43	-2.77	-0.07	-0.06	-0.10
	0.00	83.50	0.00	4.01	4.01	1.04	0.39	-0.85
2	1.36		3.84	-1.53	-3.07	-0.08	-0.06	-0.09
	0.05	0.21E+06	3.84	-1.53	-3.07	-0.08	-0.06	-0.09
	0.00	90.51	0.00	4.36	4.36	1.10	0.48	-0.77
3	1.49		3.94	-1.34	-2.94	-0.09	-0.09	-0.13
	1.99	0.22E+06	3.90	-1.36	-2.94	-0.09	-0.09	-0.13
	0.00	89.24	0.00	4.04	4.04	1.25	0.52	-0.81
4	1.61		3.73	-1.05	-2.76	-0.09	-0.07	-0.15
	4.01	0.23E+06	3.65	-1.30	-2.76	-0.09	-0.08	-0.15
	0.00	86.94	0.00	3.73	3.73	1.17	0.51	-0.77
5	1.49		4.10	-1.01	-2.93	-0.09	-0.07	-0.23
	5.99	0.22E+06	3.98	-1.43	-2.93	-0.09	-0.08	-0.23
	0.00	85.51	0.00	4.04	4.04	1.29	0.57	-0.80
6	1.38		4.56	-0.88	-3.19	-0.11	-0.08	-0.16
	7.98	0.21E+06	4.39	-1.51	-3.19	-0.09	-0.10	-0.16
	0.00	84.76	0.00	4.37	4.37	1.43	0.72	-0.87
7	1.49		4.27	-0.56	-2.90	-0.11	-0.05	-0.24
	11.98	0.22E+06	4.06	-1.44	-2.90	-0.10	-0.07	-0.24
	0.00	84.03	0.00	4.03	4.03	1.30	0.71	-0.76
8	1.49		4.48	-0.19	-2.82	-0.11	-0.04	-0.27
	16.00	0.22E+06	4.28	-1.42	-2.82	-0.09	-0.07	-0.27
	0.00	79.20	0.00	4.05	4.05	1.43	0.87	-0.88
9	1.49		4.48	-0.01	-2.76	-0.11	-0.04	-0.28
	18.00	0.22E+06	4.24	-1.39	-2.76	-0.10	-0.07	-0.28
	0.00	84.40	0.00	4.06	4.06	1.38	0.95	-0.82
10	1.49		4.61	0.37	-2.84	-0.12	-0.02	-0.35
	21.99	0.22E+06	4.42	-1.38	-2.84	-0.10	-0.06	-0.35
	0.00	99.10	0.00	4.05	4.05	1.46	1.11	-0.50

PROPULSIVE WING FORCE DATA

SUMMARY, RUN 305

PT	Q ALPHA BETA	REY NO HEIGHT	CLIS CNFIB CNUC	CDIS CAFIB CNUW	CPMIS CPMIB CNUT	CRMIS CRMIB CLTR	CYMIS CYMIB CDTR	CSFIS CSFIB CNTR
1	2.99		2.43	-0.82	-1.80	-0.03	-0.04	-0.04
	-2.01	0.31E+06	2.45	-0.53	-1.80	-0.04	-0.04	-0.04
	0.00	82.50	0.00	2.02	2.02	1.14	0.37	-0.73
2	3.10		2.38	-0.52	-1.74	-0.04	-0.05	-0.06
	-0.01	0.31E+06	2.38	-0.52	-1.74	-0.04	-0.05	-0.06
	0.00	89.51	0.00	1.95	1.95	1.10	0.38	-0.71
3	3.10		2.46	-0.45	-1.75	-0.04	-0.04	-0.07
	2.06	0.31E+06	2.44	-0.54	-1.75	-0.04	-0.04	-0.07
	0.00	85.83	0.00	1.95	1.95	1.15	0.40	-0.72
4	2.99		2.61	-0.38	-1.83	-0.05	-0.05	-0.05
	4.04	0.31E+06	2.58	-0.58	-1.83	-0.04	-0.05	-0.05
	0.00	87.50	0.00	2.03	2.03	1.22	0.46	-0.76
5	3.10		2.67	-0.28	-1.79	-0.05	-0.04	-0.07
	6.05	0.31E+06	2.62	-0.54	-1.79	-0.04	-0.04	-0.07
	0.00	88.51	0.00	1.95	1.95	1.30	0.51	-0.76
6	2.99		2.80	-0.20	-1.89	-0.05	-0.04	-0.10
	8.00	0.31E+06	2.74	-0.58	-1.89	-0.04	-0.04	-0.10
	0.00	89.33	0.00	2.03	2.03	1.35	0.55	-0.81
7	2.98		2.88	-0.02	-1.84	-0.06	-0.04	-0.10
	11.95	0.31E+06	2.82	-0.61	-1.84	-0.05	-0.05	-0.10
	0.00	87.78	0.00	2.02	2.02	1.39	0.63	-0.77
8	2.87		3.17	0.25	-1.85	-0.07	-0.03	-0.13
	16.00	0.30E+06	3.11	-0.64	-1.85	-0.06	-0.04	-0.13
	0.00	88.34	0.00	2.11	2.11	1.57	0.80	-0.73
9	2.87		3.03	0.32	-1.77	-0.07	-0.02	-0.13
	18.02	0.30E+06	2.98	-0.63	-1.77	-0.06	-0.04	-0.13
	0.00	87.31	0.00	2.11	2.11	1.41	0.82	-0.85
10	2.99		3.14	0.64	-1.71	-0.06	-0.01	-0.11
	22.04	0.31E+06	3.15	-0.58	-1.71	-0.05	-0.03	-0.11
	0.00	89.26	0.00	2.03	2.03	1.55	1.01	-0.83

PROPULSIVE WING FORCE DATA

SUMMARY, RUN 306

PT	Q ALPHA BETA	REY NO HEIGHT	CLIS CNFIB CNUC	CDIS CAFIB CNUW	CPMIS CPMIB CNUT	CRMIS CRMIB CLTR	CYMIS CYMIB CDTR	CSFIS CSFIB CNTR
1	6.00		1.82	-0.18	-1.18	-0.01	-0.02	-0.02
	-2.01	0.44E+06	1.82	-0.13	-1.18	-0.01	-0.02	-0.02
	0.00	87.95	0.00	0.99	0.99	0.98	0.29	-0.65
2	5.96		1.64	-0.14	-1.19	-0.02	-0.02	-0.01
	0.02	0.43E+06	1.64	-0.14	-1.19	-0.02	-0.02	-0.01
	0.00	88.95	0.00	0.99	0.99	0.98	0.32	-0.66
3	5.86		1.77	-0.08	-1.21	-0.03	-0.02	-0.03
	2.02	0.43E+06	1.76	-0.16	-1.21	-0.02	-0.02	-0.03
	0.00	86.29	0.00	1.02	1.02	1.08	0.35	-0.67
4	5.98		1.81	-0.03	-1.23	-0.03	-0.02	-0.03
	4.00	0.43E+06	1.80	-0.16	-1.23	-0.03	-0.02	-0.03
	0.00	87.82	0.00	1.00	1.00	1.13	0.39	-0.70
5	5.88		2.01	0.04	-1.28	-0.02	-0.02	-0.04
	6.02	0.43E+06	2.00	-0.17	-1.28	-0.02	-0.02	-0.04
	0.00	88.41	0.00	1.02	1.02	1.29	0.44	-0.72
6	5.86		2.13	0.13	-1.29	-0.02	-0.02	-0.04
	8.07	0.43E+06	2.13	0.17	-1.29	-0.02	-0.02	-0.04
	0.00	89.30	0.00	1.02	1.02	1.41	0.50	-0.75
7	5.88		2.22	0.26	-1.29	-0.03	-0.02	-0.04
	11.99	0.43E+06	2.22	-0.21	-1.29	-0.03	-0.02	-0.04
	0.00	87.16	0.00	1.02	1.02	1.46	0.58	-0.75
8	5.86		2.37	0.47	-1.27	-0.04	-0.01	-0.03
	16.05	0.43E+06	2.41	-0.21	-1.27	-0.03	-0.02	-0.03
	0.00	88.91	0.00	1.02	1.02	1.60	0.74	-0.72
9	5.86		2.41	0.57	-1.27	-0.04	-0.01	-0.04
	18.07	0.43E+06	2.47	-0.20	-1.27	-0.04	-0.02	-0.04
	0.00	87.34	0.00	1.02	1.02	1.63	0.81	-0.73
10	5.88		2.51	0.82	-1.27	-0.04	0.00	-0.08
	22.01	0.43E+06	2.83	-0.18	-1.27	-0.04	-0.01	-0.08
	0.00	88.15	0.00	1.00	1.00	1.73	1.00	-0.74

PROPULSIVE WING FORCE DATA

SUMMARY, RUN 307

PT	Q ALPHA BETA	REY NO HEIGHT	CL1S CNF1B CNUC	CD1S CAF1B CNUM	CPM1S CPN1B CNUT	CRM1S CRN1B CLTR	CYM1S CYN1B CDTR	CSF1S CSF1B CNTR
1	11.84		1.19	0.01	-0.85	-0.01	-0.02	0.00
	-2.01	0.81E+06	1.19	0.05	-0.85	-0.01	-0.02	0.00
	0.00	88.03	0.00	0.51	0.51	0.86	0.25	-0.58
2	12.07		1.26	0.05	-0.86	-0.01	-0.02	0.01
	0.02	0.82E+06	1.28	0.05	-0.86	-0.01	-0.02	0.01
	0.00	89.31	0.00	0.50	0.50	0.95	0.28	-0.58
3	12.07		1.36	0.09	-0.88	-0.01	-0.02	0.00
	2.02	0.82E+06	1.36	0.04	-0.88	-0.01	-0.02	0.00
	0.00	88.93	0.00	0.50	0.50	1.02	0.31	-0.62
4	11.86		1.47	0.14	-0.91	-0.02	-0.01	0.00
	3.99	0.81E+06	1.48	0.03	-0.91	-0.02	-0.02	0.00
	0.00	85.90	0.00	0.50	0.50	1.13	0.35	-0.64
5	12.07		1.56	0.19	-0.93	-0.01	-0.02	0.00
	6.03	0.82E+06	1.57	0.03	-0.93	-0.01	-0.02	0.00
	0.00	86.58	0.00	0.50	0.50	1.21	0.39	-0.66
6	12.07		1.70	0.26	-0.98	-0.01	-0.01	-0.01
	7.99	0.82E+06	1.72	0.02	-0.98	-0.01	-0.01	-0.01
	0.00	84.36	0.00	0.50	0.50	1.35	0.44	-0.72
7	12.07		1.95	0.42	-1.04	0.00	-0.01	-0.02
	12.03	0.81E+06	1.99	0.30	-1.04	0.00	-0.01	-0.02
	0.00	87.58	0.00	0.50	0.50	1.58	0.58	-0.77
8	11.84		1.95	0.54	-0.98	-0.03	-0.01	0.00
	16.05	0.81E+06	2.02	-0.02	-0.98	-0.02	-0.01	0.00
	0.00	87.38	0.00	0.51	0.51	1.57	0.88	-0.71
9	12.07		2.02	0.85	-0.98	-0.03	0.00	0.00
	18.01	0.81E+06	2.12	-0.01	-0.98	-0.03	-0.01	0.00
	0.00	87.57	0.00	0.50	0.50	1.64	0.75	-0.71
10	11.88		2.16	0.87	-1.02	-0.03	0.00	-0.01
	22.00	0.81E+06	2.33	0.00	-1.02	-0.03	-0.01	-0.01
	0.00	98.84	0.00	0.50	0.50	1.77	0.98	-0.75

PROPULSIVE WING FORCE DATA

SUMMARY, RUN 308

PT	Q ALPHA BETA	REY NO HEIGHT	CL1S CNF1B CNUC	CD1S CAF1B CNUM	CPM1S CPN1B CNUT	CRM1S CRN1B CLTR	CYM1S CYN1B CDTR	CSF1S CSF1B CNTR
29	0.00		12.28	-6.00	-88.53	0.77	19.46	-0.05
	0.00	0.30E+06	12.28	-6.00	-88.53	0.77	19.46	-0.05
	0.00	89.03	10.02	18.22	28.04	6.05	-0.20	-63.53
30	0.00		31.77	-21.42	-187.00	-9.25	33.20	0.41
	0.03	0.30E+06	31.78	-21.44	-187.00	-9.27	33.20	0.41
	0.00	89.03	25.02	21.14	46.16	14.78	-8.03	-152.40
31	0.00		58.38	-42.72	-303.70	-19.52	58.44	-1.40
	0.06	0.30E+06	58.33	-42.78	-303.70	-19.50	58.42	-1.40
	0.00	89.03	47.94	51.51	98.45	21.34	-15.07	-272.90
32	0.00		93.99	-60.30	-482.50	-50.17	37.57	0.94
	0.11	0.30E+06	83.86	-68.47	-482.50	-50.24	37.46	0.94
	0.00	89.03	73.98	81.61	155.60	34.55	-24.58	-444.40
33	0.00		107.50	-83.20	-884.50	-91.73	167.80	3.94
	0.08	0.30E+06	107.40	-83.38	-884.50	-91.98	167.70	3.94
	0.00	89.03	101.10	113.10	214.20	28.70	-25.87	-818.50

PROPULSIVE WING FORCE DATA

SUMMARY, RUN 309

PT	Q ALPHA BETA	REY NO HEIGHT	CL1S CSF1B CNUC	CD1S CAF1B CNUW	CPM1S CPM1B CNUT	CNM1S CNM1B CLTR	CYM1S CYM1B CDTR	CSF1S CSF1B CNTR
2	0.00		52.24	-37.53	-282.80	-17.98	52.52	-1.83
	0.09	0.30E+06	52.18	-37.61	-282.80	-18.07	52.50	-1.83
	0.00	47.36	38.51	44.64	81.16	24.56	-17.33	-280.00
3	0.00		70.94	-50.23	-388.30	-19.06	52.94	-0.46
	0.11	0.30E+06	70.85	-50.37	-388.30	-19.18	52.91	-0.48
	0.00	47.36	50.82	60.18	111.10	32.49	-22.85	-335.20
4	0.00		90.94	-63.48	-487.80	-47.22	57.78	-1.45
	0.14	0.30E+06	90.78	-63.67	-487.80	-47.38	57.67	-1.45
	0.00	47.36	85.05	75.97	141.00	41.82	-28.98	-448.10
5	0.00		102.00	-73.24	-602.10	-43.81	29.91	-0.84
	0.14	0.30E+06	101.80	-73.49	-602.10	-43.88	29.80	-0.84
	0.00	47.36	78.41	91.02	169.40	42.73	-31.78	-554.20

PROPULSIVE WING FORCE DATA

SUMMARY, RUN 310

PT	Q ALPHA BETA	REY NO HEIGHT	CL1S CSF1B CNUC	CD1S CAF1B CNUW	CPM1S CPM1B CNUT	CNM1S CNM1B CLTR	CYM1S CYM1B CDTR	CSF1S CSF1B CNTR
2	30.12		0.42	0.14	-0.13	0.00	0.00	0.01
	-2.00	0.95E+06	0.41	0.15	-0.13	0.00	0.00	0.01
	0.00	80.01	0.00	0.00	0.00	0.40	0.15	-0.11
3	30.00		0.52	0.18	-0.12	0.00	0.00	0.01
	-0.01	0.95E+06	0.52	0.18	-0.12	0.20	0.00	0.01
	0.00	80.84	0.00	0.00	0.00	0.50	0.17	-0.10
4	30.12		0.63	0.18	-0.11	0.00	0.00	0.01
	2.03	0.95E+06	0.64	0.16	-0.11	0.00	0.00	0.01
	0.00	85.55	0.00	0.00	0.00	0.62	0.20	-0.00
5	30.12		0.73	0.21	-0.08	0.00	0.00	0.01
	4.01	0.95E+06	0.74	0.15	-0.08	0.00	0.00	0.01
	0.00	83.34	0.00	0.00	0.00	0.71	0.22	-0.07
6	30.00		0.84	0.24	-0.07	0.00	0.00	0.01
	6.00	0.95E+06	0.88	0.15	-0.07	0.00	0.00	0.01
	0.00	82.84	0.00	0.00	0.00	0.82	0.25	-0.05
7	29.89		0.95	0.28	-0.04	0.00	0.00	0.01
	8.01	0.95E+06	0.98	0.14	-0.04	0.00	0.00	0.01
	0.00	85.91	0.00	0.00	0.00	0.94	0.29	-0.03
8	30.00		1.18	0.38	-0.01	0.00	0.00	0.01
	11.99	0.95E+06	1.24	0.13	-0.01	0.00	0.00	0.01
	0.00	84.79	0.00	0.00	0.00	1.17	0.40	0.01
9	30.12		1.39	0.52	0.00	0.00	0.00	0.01
	18.01	0.95E+06	1.46	0.12	0.00	0.00	0.00	0.01
	0.00	87.15	0.00	0.00	0.00	1.37	0.53	0.02
10	29.88		1.49	0.61	-0.04	0.00	0.00	0.01
	18.00	0.95E+06	1.60	0.13	-0.04	0.00	0.00	0.01
	0.00	84.80	0.00	0.00	0.00	1.47	0.63	-0.02
11	30.12		1.64	0.80	-0.04	0.00	0.00	0.00
	22.00	0.95E+06	1.82	0.13	-0.04	0.00	0.00	0.00
	0.00	84.49	0.00	0.00	0.00	1.82	0.81	-0.03

PROPULSIVE WING FORCE DATA

SUMMARY, RUN 311

PT	Q ALPHA BETA	REY NO HEIGHT	CL15 CNF10 CNUC	CD15 CAF10 CNUW	CPM15 CPM10 CMUT	CBM15 CBM10 CLTR	CYM15 CYM10 CDTR	CSF15 CSF10 CNTR
1	30.00		0.43	0.14	-0.13	-0.01	0.00	-0.00
	-2.00	0.95E+06	0.42	0.15	-0.13	-0.01	0.00	-0.05
	5.01	80.33	0.00	0.00	0.00	0.41	0.15	-0.12
2	30.00		0.53	0.18	-0.12	-0.01	0.00	-0.05
	0.02	0.95E+06	0.53	0.18	-0.12	-0.01	0.00	-0.05
	5.01	87.11	0.00	0.00	0.00	0.52	0.17	-0.11
3	30.00		0.85	0.18	-0.11	-0.02	0.00	-0.05
	2.03	0.95E+06	0.85	0.18	-0.11	-0.02	0.00	-0.05
	5.01	87.20	0.00	0.00	0.00	0.63	0.20	-0.10
4	30.00		0.75	0.21	-0.10	-0.02	0.00	-0.05
	4.02	0.95E+06	0.75	0.15	-0.10	-0.02	0.00	-0.05
	5.01	87.35	0.00	0.00	0.00	0.73	0.22	-0.08
5	29.88		0.84	0.24	-0.07	-0.02	0.00	-0.05
	5.98	0.95E+06	0.86	0.15	-0.07	-0.02	0.00	-0.05
	5.01	88.82	0.00	0.00	0.00	0.82	0.25	-0.05
6	30.00		0.97	0.28	-0.05	-0.02	-0.01	-0.04
	8.01	0.95E+06	1.00	0.14	-0.05	-0.02	-0.01	-0.04
	5.01	85.05	0.00	0.00	0.00	0.90	0.30	-0.03
7	30.12		1.21	0.30	-0.02	-0.02	0.00	-0.04
	12.00	0.95E+06	1.26	0.13	-0.02	-0.02	-0.01	-0.04
	5.01	85.93	0.00	0.00	0.00	1.10	0.40	-0.01
8	29.88		1.40	0.53	-0.01	-0.02	0.00	-0.03
	16.02	0.95E+06	1.40	0.12	-0.01	-0.02	-0.01	-0.03
	5.01	88.95	0.00	0.00	0.00	1.30	0.54	0.00
9	29.77		1.50	0.82	-0.05	-0.02	-0.01	-0.02
	17.98	0.94E+06	1.82	0.13	-0.05	-0.01	-0.01	-0.02
	5.01	87.31	0.00	0.00	0.00	1.48	0.63	-0.03
10	30.12		1.80	0.79	-0.03	-0.01	-0.02	-0.02
	22.00	0.95E+06	1.78	0.13	-0.03	0.00	-0.02	-0.02
	5.01	94.58	0.00	0.00	0.00	1.58	0.80	-0.01

PROPULSIVE WING FORCE DATA

SUMMARY, RUN 312

PT	Q ALPHA BETA	REY NO HEIGHT	CL15 CNF10 CNUC	CD15 CAF10 CNUW	CPM15 CPM10 CMUT	CBM15 CBM10 CLTR	CYM15 CYM10 CDTR	CSF15 CSF10 CNTR
1	12.10		1.11	-0.12	0.07	-0.05	-0.01	-0.06
	-2.01	0.81E+06	1.11	-0.06	0.07	-0.05	0.00	-0.06
	5.01	83.02	0.43	0.50	0.02	0.54	0.31	0.16
2	12.07		1.10	-0.08	0.12	-0.05	0.00	-0.06
	0.00	0.80E+06	1.10	-0.08	0.12	-0.05	0.00	-0.06
	5.01	90.80	0.43	0.51	0.04	0.60	0.32	0.23
3	12.07		1.20	-0.05	0.14	-0.05	0.00	-0.07
	2.02	0.80E+06	1.20	-0.10	0.14	-0.05	0.00	-0.07
	5.01	81.13	0.43	0.50	0.03	0.80	0.34	0.25
4	12.07		1.30	0.01	0.17	-0.06	0.00	-0.08
	3.00	0.80E+06	1.30	-0.08	0.17	-0.05	0.00	-0.08
	5.01	87.35	0.43	0.50	0.03	0.75	0.38	0.30
5	11.98		1.50	0.08	0.17	-0.05	0.01	-0.10
	6.02	0.80E+06	1.50	-0.08	0.17	-0.05	0.01	-0.10
	5.01	88.90	0.44	0.51	0.05	0.95	0.44	0.28
6	12.07		1.75	0.18	0.18	-0.04	0.01	-0.08
	8.00	0.80E+06	1.75	-0.06	0.18	-0.04	0.00	-0.08
	5.01	84.47	0.43	0.51	0.04	1.11	0.51	0.29
7	11.84		2.14	0.42	0.18	-0.04	0.01	-0.12
	11.98	0.80E+06	2.18	-0.04	0.18	-0.04	0.01	-0.12
	5.01	85.85	0.44	0.52	0.05	1.47	0.70	0.37
8	11.98		2.60	0.73	0.11	-0.03	0.02	-0.12
	16.03	0.80E+06	2.70	-0.01	0.11	-0.04	0.01	-0.12
	5.01	87.44	0.43	0.51	0.04	1.81	0.97	0.23
9	11.98		2.74	0.88	0.15	-0.04	0.02	-0.10
	17.98	0.80E+06	2.88	-0.01	0.15	-0.05	0.00	-0.10
	5.01	87.73	0.43	0.51	0.04	2.05	1.10	0.26
10	11.98		3.04	1.20	0.20	-0.04	0.02	-0.08
	22.02	0.80E+06	3.27	-0.02	0.20	-0.05	0.01	-0.08
	5.01	95.44	0.43	0.51	0.05	2.33	1.37	0.31

PROPULSIVE WING FORCE DATA

SUMMARY, RUN 313

PT	Q ALPHA BETA	REY NO HEIGHT	CL15 CNF10 CNUC	CD15 CAF10 CNUW	CPM15 CPM10 CMUT	CRM15 CRM10 CLTR	CYM15 CYM10 CDTR	CSF15 CSF10 CMTR
1	5.00		1.91	-0.51	-0.11	-0.05	-0.01	-0.03
	-2.00	0.42E+06	1.93	-0.44	-0.11	-0.05	-0.01	-0.03
	5.01	80.72	0.80	1.04	1.03	0.72	0.30	0.12
2	5.00		1.85	-0.46	0.04	-0.07	0.00	-0.05
	0.03	0.43E+06	1.85	-0.46	0.04	-0.07	0.00	-0.05
	5.01	87.79	0.87	1.02	1.00	0.05	0.30	0.26
3	5.00		1.00	-0.42	0.11	-0.06	0.01	-0.07
	1.99	0.43E+06	1.87	-0.46	0.11	-0.06	0.00	-0.07
	5.01	90.27	0.87	1.02	1.00	0.07	0.30	0.33
4	5.00		2.01	-0.36	0.12	-0.07	0.01	-0.07
	3.99	0.43E+06	1.90	-0.50	0.12	-0.07	0.00	-0.07
	5.01	90.57	0.88	1.03	1.90	0.76	0.40	0.35
5	5.00		2.00	-0.28	0.24	-0.06	0.01	-0.07
	6.01	0.43E+06	2.04	-0.50	0.24	-0.06	0.00	-0.07
	5.01	88.39	0.87	1.03	1.90	0.80	0.43	0.46
6	5.00		2.25	-0.18	0.22	-0.06	0.02	-0.08
	8.00	0.43E+06	2.20	-0.49	0.22	-0.06	0.01	-0.08
	5.01	88.00	0.88	1.03	1.90	0.94	0.49	0.45
7	5.00		2.50	0.07	0.21	-0.06	0.03	-0.11
	11.99	0.43E+06	2.54	-0.47	0.21	-0.06	0.01	-0.11
	5.01	88.33	0.87	1.03	1.90	1.23	0.05	0.44
8	5.00		2.99	0.30	0.18	-0.06	0.02	-0.00
	15.99	0.42E+06	2.96	-0.46	0.18	-0.06	0.09	-0.00
	5.01	81.32	0.80	1.05	1.94	1.58	0.88	0.41
9	5.00		3.07	0.54	0.18	-0.06	0.03	-0.12
	17.99	0.43E+06	3.00	-0.44	0.18	-0.07	0.01	-0.12
	5.01	87.87	0.86	1.01	1.07	1.09	0.97	0.41
10	5.00		3.20	0.83	0.36	-0.06	0.02	-0.11
	22.00	0.42E+06	3.34	-0.45	0.36	-0.06	0.00	-0.11
	5.01	87.33	0.88	1.04	1.92	1.81	1.17	0.50

PROPULSIVE WING FORCE DATA

SUMMARY, RUN 314

PT	Q ALPHA BETA	REY NO HEIGHT	CL15 CNF10 CNUC	CD15 CAF10 CNUW	CPM15 CPM10 CMUT	CRM15 CRM10 CLTR	CYM15 CYM10 CDTR	CSF15 CSF10 CMTR
1	3.22		2.78	-1.24	-0.20	-0.06	0.00	-0.05
	-2.00	0.31E+06	2.82	-1.14	-0.20	-0.06	0.00	-0.05
	5.01	78.68	1.00	1.07	3.47	0.04	0.38	0.15
2	3.10		2.93	-1.10	-0.21	-0.06	-0.02	0.00
	-0.02	0.31E+06	2.93	-1.10	-0.21	-0.06	-0.02	0.00
	5.01	82.56	1.05	1.06	3.00	0.05	0.43	0.22
3	3.10		3.06	-1.06	-0.17	-0.06	0.00	-0.05
	2.02	0.31E+06	3.02	-1.10	-0.17	-0.06	0.00	-0.05
	5.01	90.00	1.00	1.05	3.61	0.72	0.47	0.20
4	2.00		3.13	-1.03	-0.06	-0.00	0.00	-0.03
	4.01	0.30E+06	3.06	-1.25	-0.05	-0.00	-0.01	-0.03
	5.01	88.70	1.72	2.02	3.75	0.84	0.47	0.40
5	2.00		3.20	-0.95	0.05	-0.10	0.03	-0.10
	6.02	0.30E+06	3.00	-1.28	0.05	-0.10	0.02	-0.10
	5.01	88.74	1.72	2.02	3.74	0.87	0.46	0.40
6	3.10		3.20	-0.82	0.10	-0.10	0.02	-0.00
	7.00	0.31E+06	3.05	-1.20	0.10	-0.10	0.01	-0.00
	5.01	87.90	1.05	1.05	3.61	0.71	0.46	0.50
7	3.10		3.22	-0.62	0.43	-0.10	0.03	-0.10
	12.00	0.31E+06	3.02	-1.27	0.43	-0.11	0.01	-0.10
	5.01	87.64	1.07	1.00	3.02	0.05	0.48	0.05
8	2.99		3.81	-0.27	0.30	-0.12	0.03	-0.10
	16.00	0.30E+06	3.50	-1.31	0.30	-0.12	0.00	-0.10
	5.01	85.10	1.75	2.06	3.01	1.05	0.00	0.74
9	3.10		4.07	0.03	0.13	-0.12	0.07	-0.17
	17.99	0.31E+06	3.88	-1.22	0.13	-0.13	0.03	-0.17
	5.01	87.99	1.66	1.95	3.61	1.40	0.85	0.50
10	2.99		4.18	0.34	0.47	-0.13	0.06	-0.00
	21.00	0.30E+06	4.00	-1.25	0.47	-0.14	0.01	-0.00
	5.01	88.14	1.72	2.03	3.76	1.34	1.00	0.01

PROPULSIVE WING FORCE DATA

SUMMARY, RUN 315

PT	Q ALPHA BETA	REY NO HEIGHT	CL1S CNF1B CNUC	CD1S CAF1B CNUA	CPM1S CPM1B CMUT	CNM1S CNM1B CLTR	CYM1S CYM1B CNTR	CSF1S CSF1B CNTR
1	1.01		4.06	-2.53	-0.46	-0.05	0.03	0.00
	-2.01	0.22E+06	4.75	-2.77	-0.48	-0.06	0.03	0.00
	-0.01	79.00	3.23	3.79	7.02	0.33	0.35	0.35
2	1.00		5.23	-2.00	-0.51	-0.04	0.04	-0.00
	-0.02	0.21E+06	5.23	-2.00	-0.51	-0.04	0.04	-0.00
	-0.01	86.72	3.48	4.00	7.57	0.44	0.30	0.30
3	1.00		5.47	-2.74	-0.51	-0.04	0.04	-0.03
	2.02	0.21E+06	5.37	-2.04	-0.51	-0.04	0.04	-0.03
	-0.01	87.00	3.40	4.10	7.50	0.50	0.46	0.30
4	1.01		5.24	-2.30	-0.48	0.00	0.02	-0.06
	4.02	0.22E+06	5.06	-2.72	-0.48	0.00	0.02	-0.06
	-0.01	80.05	3.24	3.80	7.04	0.50	0.40	0.35
5	1.40		5.70	-2.37	-0.37	-0.03	0.04	-0.03
	5.02	0.21E+06	5.42	-2.90	-0.37	-0.03	0.04	-0.03
	-0.01	80.22	3.40	4.11	7.60	0.57	0.49	0.53
6	1.01		5.57	-1.07	-0.43	0.00	0.01	0.01
	7.00	0.22E+06	5.24	-2.73	-0.43	0.00	0.01	0.01
	-0.01	85.57	3.24	3.81	7.04	0.72	0.52	0.41
7	1.40		6.11	-1.70	-0.10	-0.04	0.05	-0.03
	11.90	0.21E+06	5.61	-2.00	-0.10	-0.05	0.04	-0.03
	-0.01	80.70	3.40	4.10	7.50	0.71	0.55	0.72
8	1.40		5.04	-1.51	0.20	-0.05	0.07	-0.23
	16.02	0.21E+06	5.10	-2.06	0.20	-0.07	0.05	-0.23
	-0.01	87.35	3.50	4.11	7.00	0.20	0.42	1.10
9	1.40		6.35	-1.12	-0.07	-0.05	0.07	-0.10
	18.01	0.21E+06	5.00	-3.03	-0.07	-0.07	0.05	-0.10
	-0.01	87.20	3.50	4.11	7.01	0.73	0.01	0.03
10	1.40		6.43	-0.74	0.24	-0.01	0.00	-0.32
	21.00	0.21E+06	5.00	-2.00	0.24	-0.03	0.05	-0.32
	-0.01	80.03	3.50	4.11	7.01	0.71	0.01	1.14

PROPULSIVE WING FORCE DATA

SUMMARY, RUN 316

PT	Q ALPHA BETA	REY NO HEIGHT	CL1S CNF1B CNUC	CD1S CAF1B CNUA	CPM1S CPM1B CMUT	CNM1S CNM1B CLTR	CYM1S CYM1B CNTR	CSF1S CSF1B CNTR
2	3.22		2.00	-1.24	-0.27	-0.02	0.02	0.00
	-2.00	0.31E+06	2.01	-1.14	-0.27	-0.02	0.02	0.00
	-0.01	87.23	1.02	1.06	3.53	0.70	0.30	0.14
3	3.10		3.10	-1.10	-0.20	-0.03	0.02	0.00
	-0.01	0.31E+06	3.10	-1.10	-0.20	-0.03	0.02	0.00
	-0.01	87.30	1.00	1.00	3.07	0.05	0.43	0.17
4	2.00		3.30	-1.11	-0.20	-0.01	0.01	0.01
	2.01	0.30E+06	3.31	-1.23	-0.20	-0.01	0.01	0.01
	0.00	87.07	1.75	2.06	3.01	0.00	0.50	0.25
5	3.10		3.25	-0.03	0.00	-0.05	0.02	-0.03
	6.03	0.31E+06	3.13	-1.27	0.00	-0.05	0.03	-0.03
	-0.01	87.03	1.70	1.00	3.05	0.75	0.44	0.51
6	3.22		3.10	-0.01	0.13	-0.06	0.03	-0.00
	8.05	0.31E+06	3.03	-1.25	0.13	-0.06	0.03	-0.00
	-0.01	87.72	1.03	1.01	3.54	0.75	0.44	0.55
7	3.10		3.05	-0.50	0.21	-0.03	0.04	-0.00
	12.04	0.31E+06	3.25	-1.31	0.21	-0.04	0.03	-0.00
	-0.01	87.25	1.00	1.00	3.00	0.04	0.53	0.04
8	3.10		3.77	-0.25	0.26	-0.03	0.04	-0.07
	16.00	0.31E+06	3.50	-1.20	0.20	-0.04	0.03	-0.07
	-0.01	00.75	1.70	1.00	3.05	1.10	0.00	0.71
9	2.07		4.35	-0.06	0.10	-0.03	0.03	-0.00
	18.06	0.30E+06	4.11	-1.41	0.10	-0.04	0.02	-0.00
	-0.01	04.03	1.03	2.15	3.90	1.42	0.04	0.05
10	3.10		4.14	0.29	0.30	-0.02	0.03	-0.07
	22.01	0.31E+06	3.05	-1.20	0.20	-0.03	0.02	-0.07
	-0.01	00.20	1.00	1.00	3.07	1.30	0.04	0.22

PROPULSIVE WING FORCE DATA

SUMMARY, RUN 317

PT	Q ALPHA BETA	REY NO HEIGHT	CL1S CSF1S CNUC	CD1S CAF1S CNUM	CPM1S CPN1S CNUT	CBM1S CBN1S CLTR	CYM1S CYN1S CDTR	CSF1S CSF1S CNTR
1	6.00		1.86	-0.50	-0.10	-0.02	0.00	0.05
	-2.00	0.43E+06	1.87	-0.43	-0.10	-0.02	0.00	0.05
	-0.01	87.07	0.86	1.01	1.88	0.70	0.38	0.12
2	6.00		1.83	-0.47	0.03	-0.05	0.01	0.02
	0.00	0.43E+06	1.83	-0.47	0.03	-0.05	0.01	0.02
	-0.01	87.75	0.88	1.02	1.88	0.85	0.38	0.25
3	6.21		1.77	-0.43	0.15	-0.02	0.01	0.00
	2.00	0.43E+06	1.78	-0.42	0.15	-0.02	0.01	0.00
	-0.01	87.74	0.85	1.00	1.85	0.58	0.35	0.37
4	6.00		1.93	-0.38	0.10	0.00	0.01	0.00
	4.05	0.43E+06	1.88	-0.51	0.10	-0.01	0.01	0.00
	0.00	88.92	0.88	1.01	1.88	0.88	0.37	0.41
5	6.00		2.00	-0.30	0.18	-0.01	0.01	0.01
	6.05	0.43E+06	2.04	-0.51	0.18	-0.02	0.00	0.01
	-0.01	85.77	0.87	1.02	1.88	0.82	0.41	0.40
6	6.00		2.20	-0.20	0.25	-0.03	0.01	-0.01
	8.02	0.43E+06	2.18	-0.50	0.25	-0.03	0.01	-0.01
	-0.01	87.83	0.88	1.02	1.88	0.91	0.47	0.47
7	6.21		2.50	0.06	0.20	-0.02	0.01	-0.01
	12.07	0.43E+06	2.45	-0.47	0.20	-0.02	0.00	-0.01
	-0.01	88.00	0.85	1.00	1.85	1.10	0.82	0.51
8	6.44		2.84	0.32	0.38	-0.02	0.01	-0.03
	16.03	0.44E+06	2.83	-0.42	0.38	-0.02	0.00	-0.03
	-0.01	87.18	0.83	0.97	1.81	1.33	0.78	0.60
9	6.32		2.96	0.51	0.27	-0.02	0.01	-0.03
	18.02	0.44E+06	2.97	-0.43	0.27	-0.02	0.01	-0.03
	-0.01	86.96	0.85	0.98	1.84	1.61	0.93	0.40
10	6.00		3.29	0.85	0.33	0.00	0.01	-0.05
	22.04	0.43E+06	3.36	-0.45	0.33	0.00	0.01	-0.05
	-0.01	97.42	0.88	1.03	1.90	1.86	1.18	0.55

PROPULSIVE WING FORCE DATA

SUMMARY, RUN 318

PT	Q ALPHA BETA	REY NO HEIGHT	CL1S CSF1S CNUC	CD1S CAF1S CNUM	CPM1S CPN1S CNUT	CBM1S CBN1S CLTR	CYM1S CYN1S CDTR	CSF1S CSF1S CNTR
1	12.42		1.11	-0.13	0.07	0.00	0.00	0.00
	-1.97	0.61E+06	1.11	-0.09	0.07	0.00	0.00	0.00
	0.00	88.77	0.43	0.51	0.94	0.54	0.31	0.18
2	12.18		1.18	-0.11	0.14	-0.01	-0.01	0.03
	0.02	0.61E+06	1.18	-0.11	0.14	-0.01	-0.01	0.03
	-0.01	87.95	0.44	0.52	0.96	0.58	0.31	0.25
3	12.30		1.26	-0.07	0.17	-0.01	0.00	0.01
	2.06	0.61E+06	1.25	-0.12	0.17	-0.01	0.00	0.01
	-0.01	88.06	0.44	0.51	0.95	0.66	0.33	0.29
4	12.30		1.37	-0.01	0.19	-0.02	-0.01	0.03
	4.00	0.61E+06	1.37	-0.11	0.19	-0.02	-0.01	0.03
	-0.01	87.78	0.44	0.51	0.95	0.75	0.36	0.31
5	12.07		1.52	0.06	0.24	-0.01	0.00	0.02
	6.04	0.60E+06	1.52	-0.10	0.24	-0.01	0.00	0.02
	-0.01	87.68	0.45	0.52	0.97	0.87	0.42	0.35
6	12.07		1.68	0.14	0.25	-0.01	0.00	0.00
	8.01	0.60E+06	1.68	-0.08	0.25	-0.01	0.00	0.00
	-0.01	88.34	0.45	0.52	0.97	1.02	0.46	0.36
7	12.19		2.08	0.40	0.20	0.00	0.00	-0.02
	12.07	0.61E+06	2.13	-0.05	0.20	0.00	0.00	-0.02
	-0.01	87.07	0.44	0.52	0.96	1.42	0.88	0.32
8	12.42		2.61	0.78	0.10	0.02	0.00	-0.01
	16.05	0.61E+06	2.72	0.01	0.10	0.01	0.01	-0.01
	-0.01	87.58	0.44	[illegible]	0.95	1.03	1.06	0.21
9	12.19		2.82	[illegible]	0.00	0.01	0.01	-0.01
	18.05	0.61E+06	2.97		0.00	0.00	0.01	-0.01
	-0.01	87.61	0.45	[illegible]	0.97	2.12	1.15	0.20
10	12.30		3.06	1.24	0.13	0.00	0.03	-0.05
	22.09	0.61E+06	3.22	-0.01	0.13	-0.01	0.02	-0.05
	-0.01	95.78	0.44	0.52	0.96	2.37	1.41	0.25

PROPULSIVE WING FORCE DATA

SUMMARY, RUN 310

PT	Q ALPHA BETA	REY NO HEIGHT	CL15 CNF10 CNUC	CD15 CAF10 CNUM	CM15 CMF10 CMUT	CN15 CNF10 CLTR	CY15 CYF10 CDTR	CS15 CSF10 CNTR
4	0.00		-0.11	-0.54	15.20	0.20	0.30	-0.44
	-0.01	0.00E+00	-0.11	-0.54	15.20	0.20	0.30	-0.44
	0.00	51.64	0.00	0.00	0.00	0.57	5.77	20.03
5	0.00		-0.11	-0.54	15.20	0.20	0.30	-0.44
	-0.01	0.00E+00	-0.11	-0.54	15.20	0.20	5.30	-0.44
	0.00	51.64	0.00	0.00	0.00	0.57	5.77	20.03
6	0.00		-0.11	-0.54	15.20	0.20	0.30	-0.44
	-0.01	0.00E+00	-0.11	-0.54	15.20	0.20	0.30	-0.44
	0.00	51.64	0.00	0.00	0.00	0.57	5.77	20.03
7	0.00		-0.11	-0.54	15.20	0.20	0.30	-0.44
	-0.01	0.00E+00	-0.11	-0.54	15.20	0.20	0.30	-0.44
	0.00	51.34	0.00	0.00	0.00	0.57	5.77	20.03
8	0.00		-0.11	-0.54	15.20	0.20	0.30	-0.44
	-0.01	0.00E+00	-0.11	-0.54	15.20	0.20	0.30	-0.44
	0.00	51.64	0.00	0.00	0.00	0.57	5.77	20.03
9	0.00		-0.11	-0.54	15.20	0.20	0.30	-0.44
	-0.01	0.00E+00	-0.11	-0.54	15.20	0.20	0.30	-0.44
	0.00	51.64	0.00	0.00	0.00	0.57	5.77	20.03
10	0.00		-0.11	-0.54	15.20	0.20	0.30	-0.44
	-0.01	0.00E+00	-0.11	-0.54	15.20	0.20	0.30	-0.44
	0.00	51.64	0.00	0.00	0.00	0.57	5.77	20.03
11	0.00		-0.11	-0.54	15.20	0.20	0.30	-0.44
	-0.01	0.00E+00	-0.11	-0.54	15.20	0.20	0.30	-0.44
	0.00	51.64	0.00	0.00	0.00	0.57	5.77	20.03

PROPULSIVE WING FORCE DATA

SUMMARY, RUN 320

PT	Q ALPHA BETA	REY NO HEIGHT	CL15 CNF10 CNUC	CD15 CAF10 CNUM	CM15 CMF10 CMUT	CN15 CNF10 CLTR	CY15 CYF10 CDTR	CS15 CSF10 CNTR
2	12.20		0.52	0.11	-0.30	0.00	0.00	0.00
	-0.01	0.02E+06	0.52	0.11	-0.30	0.00	0.00	0.00
	0.00	18.92	0.00	0.00	0.00	[illegible]	0.15	-0.20
3	12.05		0.53	0.11	-0.30	0.00	0.00	0.01
	-0.01	0.02E+06	0.53	0.11	-0.30	0.00	0.00	0.01
	0.00	18.92	0.00	0.00	0.00	0.40	0.15	-0.20
4	12.17		0.48	0.11	-0.28	0.00	0.00	0.01
	-0.03	0.02E+06	0.48	0.11	-0.29	0.00	0.00	0.01
	0.00	22.23	0.00	0.00	0.00	0.45	0.16	-0.24
5	11.94		0.48	0.11	-0.29	0.00	0.00	0.01
	-0.04	0.02E+06	0.48	0.11	-0.29	0.00	0.00	0.01
	0.00	85.81	0.00	0.00	0.00	0.43	0.15	-0.25
6	12.05		0.44	0.12	-0.27	0.00	0.00	0.01
	-0.07	0.02E+06	0.44	0.12	-0.27	0.00	0.00	0.01
	0.00	57.06	0.00	0.00	0.00	0.41	0.16	-0.24

PROPULSIVE WING FORCE DATA

SUMMARY, RUN 321

PT	Q ALPHA BETA	REY NO HEIGHT	CL15 CSF10 CRUC	CD15 CAF10 CRUM	CPM15 CPM10 CRUT	CRM15 CRM10 CLTR	CYM15 CYM10 CDTR	CSF15 CSF10 CNTR
1	12.17		0.00	0.10	-0.35	-0.01	-0.01	-0.05
	0.06	0.02E+06	0.01	0.04	-0.25	-0.01	-0.01	-0.05
	5.00	47.58	0.00	0.00	0.00	0.70	0.10	-0.31
2	12.05		0.70	0.10	-0.35	-0.01	-0.01	-0.05
	0.04	0.02E+06	0.01	0.04	-0.35	-0.01	-0.01	-0.05
	5.00	85.00	0.00	0.00	0.00	0.75	0.10	-0.31
3	11.94		0.00	0.17	-0.34	-0.01	-0.01	-0.05
	0.04	0.02E+06	0.02	0.05	-0.34	-0.01	-0.01	-0.05
	5.00	87.05	0.00	0.00	0.00	0.70	0.20	-0.30

PROPULSIVE WING FORCE DATA

SUMMARY, RUN 322

PT	Q ALPHA BETA	REY NO HEIGHT	CL15 CSF10 CRUC	CD15 CAF10 CRUM	LPM15 CPM10 CRUT	CRM15 CRM10 CLTR	CYM15 CYM10 CDTR	CSF15 CSF10 CNTR
2	12.17		1.26	-0.02	-0.03	-0.01	0.00	0.00
	-0.11	0.03E+06	1.26	-0.02	-0.03	-0.01	0.00	0.00
	0.00	10.11	0.00	0.40	0.40	0.95	0.21	-0.57
3	12.17		1.24	0.00	-0.04	-0.01	0.00	0.00
	-0.12	0.03E+06	1.24	0.00	-0.04	-0.01	0.00	0.00
	0.00	32.81	0.00	0.50	0.50	0.91	0.23	-0.57
4	12.05		1.24	0.02	-0.04	-0.01	0.00	0.01
	0.05	0.02E+06	1.24	0.02	-0.04	-0.01	0.00	0.01
	0.00	85.07	0.00	0.50	0.50	0.91	0.25	-0.57
5	11.94		1.24	0.02	-0.04	-0.01	0.00	0.02
	0.04	0.02E+06	1.24	0.02	-0.04	-0.01	0.00	0.02
	0.00	87.58	0.00	0.50	0.50	0.90	0.26	-0.57

PROPULSIVE WING FORCE DATA

SUMMARY, RUN 323

PT	Q ALPHA BETA	RET NO HEIGHT	CL15 CNF10 CNWC	CD15 CAF10 CNWA	CPM15 CPM10 CNWT	CBM15 CBM10 CLTR	CYM15 CYM10 CDTR	CSF15 CSF10 CNTR
1	12.17		1.68	0.22	-0.03	-0.01	0.00	-0.07
	8.04	0.63E+06	1.70	-0.02	-0.03	-0.01	0.00	-0.07
	5.01	47.06	0.00	0.50	0.50	1.33	0.40	-0.67
2	12.17		1.67	0.23	-0.03	-0.02	0.00	-0.07
	8.03	0.63E+06	1.68	-0.01	-0.03	-0.02	0.00	-0.07
	5.01	88.06	0.00	0.50	0.50	1.31	0.41	-0.67
3	12.05		1.67	0.22	-0.03	-0.01	0.00	-0.07
	8.02	0.62E+06	1.68	-0.01	-0.03	-0.01	0.00	-0.07
	5.01	87.03	0.00	0.50	0.50	1.31	0.41	-0.66

PROPULSIVE WING FORCE DATA

SUMMARY, RUN 324

PT	Q ALPHA BETA	RET NO HEIGHT	CL15 CNF10 CNWC	CD15 CAF10 CNWA	CPM15 CPM10 CNWT	CBM15 CBM10 CLTR	CYM15 CYM10 CDTR	CSF15 CSF10 CNTR
2	5.06		2.16	0.06	-1.26	0.00	0.01	-0.10
	8.03	0.44E+06	2.16	-0.24	-1.26	0.00	0.01	-0.10
	5.01	47.03	0.00	1.01	1.01	1.44	0.44	-0.71
3	5.06		2.13	0.07	-1.27	0.00	0.01	-0.11
	8.02	0.44E+06	2.11	-0.23	-1.27	0.00	0.01	-0.11
	5.01	88.02	0.00	1.01	1.01	1.38	0.44	-0.72
4	5.07		2.13	0.06	-1.25	-0.01	0.01	-0.11
	8.02	0.44E+06	2.12	-0.24	-1.25	-0.01	0.01	-0.11
	5.01	87.10	0.00	1.03	1.03	1.38	0.44	-0.70

PROPULSIVE WING FORCE DATA

SUMMARY, RUN 326

PT	Q ALPHA BETA	REY NO HEIGHT	CLIS CAFIS CNWC	CDIS CAFIS CNWW	CPMIS CPMIS CMWT	CBMIS CBMIS CLTR	CYMIS CYMIS CDTR	CSFIS CSFIS CNTR
1	5.97		1.75	-0.27	-1.17	-0.02	0.00	0.00
	0.00	0.44E+06	1.75	-0.27	-1.17	-0.02	0.00	0.00
	0.00	10.56	0.00	1.03	1.03	1.06	0.22	-0.61
2	5.97		1.87	-0.24	-1.15	-0.01	0.00	0.01
	-0.02	0.44E+06	1.87	-0.24	-1.15	-0.01	0.00	0.01
	0.00	32.81	0.00	1.23	1.03	0.98	0.25	-0.50

PROPULSIVE WING FORCE DATA

SUMMARY, RUN 326

PT	Q ALPHA BETA	REY NO HEIGHT	CLIS CAFIS CNWC	CDIS CAFIS CNWW	CPMIS CPMIS CMWT	CBMIS CBMIS CLTR	CYMIS CYMIS CDTR	CSFIS CSFIS CNTR
1	0.00		1.73	-0.20	-1.14	-0.02	0.00	0.00
	0.00	0.44E+06	1.73	-0.20	-1.14	-0.02	0.00	0.00
	0.00	10.20	0.00	1.02	1.02	1.05	0.22	-0.50
2	5.97		1.88	-0.24	-1.18	-0.01	0.00	0.00
	-0.02	0.44E+06	1.88	-0.23	-1.18	-0.01	0.00	0.00
	0.00	32.84	0.00	1.04	1.04	0.98	0.25	-0.02
3	5.97		1.72	-0.21	-1.18	-0.01	0.00	0.00
	-0.04	0.44E+06	1.72	-0.21	-1.18	-0.01	0.00	0.00
	0.00	35.08	0.00	1.04	1.04	1.02	0.27	-0.00
4	5.97		1.88	-0.21	-1.17	-0.01	0.00	0.03
	0.04	0.44E+06	1.88	-0.21	-1.17	-0.01	0.00	0.03
	0.00	37.36	0.00	1.03	1.03	0.99	0.26	-0.01

PROPULSIVE WING FORCE DATA

SUMMARY, RUN 327

PT	Q ALPHA BETA	REY NO HEIGHT	CL15 CNF10 CNWC	CD15 CAF10 CNWH	CPM15 CPM10 CNWT	CRM15 CRM10 CLTR	CYM15 CYM10 CDTR	CSF15 CSF10 CNTR
2	2.93 0.02 0.00	0.31E+06 10.30	2.50 2.50 0.00	-0.75 -0.75 2.12	-1.75 -1.75 2.12	-0.02 -0.02 1.15	0.01 0.01 0.25	-0.05 -0.05 -0.01
3	3.04 0.00 0.00	0.31E+06 32.00	2.44 2.44 0.00	-0.00 -0.00 2.03	-1.73 -1.73 2.03	-0.02 -0.02 1.00	0.00 0.00 0.27	-0.03 -0.03 -0.03
4	3.04 -0.02 0.00	0.31E+06 65.00	2.42 2.42 0.00	-0.00 -0.00 2.04	-1.74 -1.74 2.04	-0.01 -0.01 1.00	0.00 0.00 0.29	-0.02 -0.02 -0.04
5	3.04 -0.04 0.00	0.31E+06 87.00	2.47 2.47 0.00	-0.05 -0.05 2.05	-1.74 -1.74 2.05	-0.01 -0.01 1.11	0.00 0.00 0.31	0.00 0.00 -0.03

PROPULSIVE WING FORCE DATA

SUMMARY, RUN 330

PT	Q ALPHA BETA	REY NO HEIGHT	CL15 CNF10 CNWC	CD15 CAF10 CNWH	CPM15 CPM10 CNWT	CRM15 CRM10 CLTR	CYM15 CYM10 CDTR	CSF15 CSF10 CNTR
1	3.04 0.07 5.01	0.31E+06 45.00	2.01 2.04 0.00	-0.31 -0.71 2.06	-1.70 -1.70 2.06	-0.01 -0.01 1.43	0.02 0.02 0.45	-0.15 -0.15 -0.08
2	3.03 0.00 5.01	0.31E+06 65.01	2.05 2.08 0.00	-0.33 -0.74 2.13	-1.80 -1.80 2.13	-0.01 -0.02 1.41	0.02 0.02 0.46	-0.20 -0.20 -0.73
3	3.04 0.06 5.01	0.31E+06 87.00	2.02 2.75 0.00	-0.31 -0.70 2.06	-1.70 -1.70 2.06	-0.03 -0.03 1.33	0.02 0.01 0.45	-0.15 -0.15 -0.08

PROPULSIVE WING FORCE DATA

SUMMARY, RUN 320

PT	Q ALPHA BETA	REY NO HEIGHT	CL1S CSF1B CNWC	CD1S CAF1B CNWW	CPM1S CPM1B CMWT	CBM1S CBM1B CLTR	CYM1S CYM1B CDTR	CSF1S CSF1B CNTR
1	8.00		2.15	0.00	-1.27	0.00	0.01	-0.11
	8.07	0.44E+06	2.14	-0.24	-1.27	0.00	0.01	-0.11
	5.01	48.00	0.00	1.02	1.02	1.41	0.44	-0.71
2	5.97		2.18	0.07	-1.28	0.00	0.01	-0.11
	8.06	0.44E+06	2.17	-0.24	-1.28	0.00	0.01	-0.11
	5.01	85.63	0.00	1.06	1.06	1.42	0.46	-0.73
3	8.00		2.14	0.00	-1.25	0.00	0.01	-0.12
	8.05	0.44E+06	2.13	-0.24	-1.25	0.00	0.01	-0.12
	5.01	87.00	0.00	1.03	1.03	1.39	0.45	-0.70

PROPULSIVE WING FORCE DATA

SUMMARY, RUN 330

PT	Q ALPHA BETA	REY NO HEIGHT	CL1S CSF1B CNWC	CD1S CAF1B CNWW	CPM1S CPM1B CMWT	CBM1S CBM1B CLTR	CYM1S CYM1B CDTR	CSF1S CSF1B CNTR
1	12.17		1.73	0.22	-0.96	-0.01	0.00	-0.07
	8.07	0.63E+06	1.75	-0.03	-0.96	-0.01	0.00	-0.07
	5.01	48.10	0.00	0.51	0.51	1.36	0.41	-0.68
2	12.17		1.70	0.22	-0.95	-0.02	0.00	-0.07
	8.06	0.63E+06	1.71	-0.02	-0.95	-0.02	0.00	-0.07
	5.01	85.61	0.00	0.52	0.52	1.33	0.41	-0.67
3	12.05		1.71	0.22	-0.95	-0.02	0.00	-0.06
	8.05	0.62E+06	1.72	-0.02	-0.95	-0.02	0.00	-0.06
	5.01	88.73	0.00	0.52	0.52	1.33	0.41	-0.67

PROPULSIVE WING FORCE DATA

SUMMARY, RUN 331

PT	Q ALPHA BETA	REY NO HEIGHT	CL1S CDF1B CNUC	CD1S CAF1B CNUM	CPM1S CPM1B CNUT	CRM1S CRM1B CLTR	CYM1S CYM1B CDTR	CSF1S CSF1B CNTR
1	12.26		1.32	-0.03	-0.86	-0.01	-0.61	0.01
	0.02	0.63E+06	1.32	-0.03	-0.86	-0.01	-0.01	0.01
	0.00	19.86	0.00	0.51	0.51	0.00	0.21	-0.50
2	12.17		1.27	-0.01	-0.85	-0.01	0.00	0.01
	0.01	0.63E+06	1.27	-0.01	-0.85	-0.01	0.00	0.01
	0.00	32.80	0.00	0.52	0.52	0.02	0.23	-0.57
3	12.06		1.25	0.01	-0.85	-0.01	0.00	0.01
	-0.01	0.63E+06	1.25	0.01	-0.85	-0.01	0.00	0.01
	0.00	85.61	0.00	0.52	0.52	0.00	0.25	-0.57
4	11.94		1.26	0.01	-0.85	-0.01	0.00	0.02
	-0.03	0.63E+06	1.26	0.01	-0.85	-0.01	0.00	0.02
	0.00	87.03	0.00	0.53	0.53	0.04	0.25	-0.57

PROPULSIVE WING FORCE DATA

SUMMARY, RUN 332

PT	Q ALPHA BETA	REY NO HEIGHT	CL1S CDF1B CNUC	CD1S CAF1B CNUM	CPM1S CPM1B CNUT	CRM1S CRM1B CLTR	CYM1S CYM1B CDTR	CSF1S CSF1B CNTR
1	12.17		0.53	0.12	-0.30	0.00	0.00	0.02
	0.12	0.63E+06	0.53	0.12	-0.30	0.00	0.00	0.02
	0.00	19.67	0.00	0.00	0.00	0.48	0.18	-0.26
2	12.17		0.48	0.12	-0.29	0.00	0.00	0.02
	0.13	0.63E+06	0.48	0.12	-0.29	0.00	0.00	0.02
	0.00	32.80	0.00	0.00	0.00	0.45	0.18	-0.25
3	12.05		0.48	0.12	-0.30	0.00	0.00	0.02
	0.11	0.63E+06	0.48	0.12	-0.30	0.00	0.00	0.02
	0.00	85.70	0.00	0.00	0.00	0.44	0.18	-0.24
4	12.17		0.45	0.12	-0.28	0.00	0.00	0.02
	-0.02	0.63E+06	0.45	0.12	-0.28	0.00	0.00	0.02
	0.00	88.63	0.00	0.00	0.00	0.41	0.18	-0.24

PROPULSIVE WING FORCE DATA

SUMMARY. RUN 333

PT	Q ALPHA BETA	REY NO HEIGHT	CL1S CNF1B CNUC	CD1S CAF1B CNUW	CPM1S CPT1B CNUT	CNM1S CNM1B CLTR	CYM1S CYM1B CDTR	CSF1S CSF1B CNTR
1	12.17		0.82	0.21	-0.34	-0.01	-0.01	-0.04
	8.02	0.63E+06	0.84	0.00	-0.34	-0.01	-0.01	-0.04
	5.01	47.51	0.00	0.00	0.00	0.78	0.24	-0.30
2	12.05		0.81	0.21	-0.34	-0.01	-0.01	-0.05
	8.01	0.63E+06	0.83	0.00	-0.34	-0.01	-0.01	-0.05
	5.01	85.63	0.00	0.00	0.00	0.77	0.24	-0.30
3	12.17		0.80	0.21	-0.34	-0.01	-0.01	-0.05
	8.01	0.63E+06	0.82	0.00	-0.34	-0.01	-0.01	-0.05
	5.01	87.06	0.00	0.00	0.00	0.76	0.24	-0.30

PROPULSIVE WING FORCE DATA

SUMMARY. RUN 334

PT	Q ALPHA BETA	REY NO HEIGHT	CL1S CNF1B CNUC	CD1S CAF1B CNUW	CPM1S CPM1B CNUT	CNM1S CNM1B CLTR	CYM1S CYM1B CDTR	CSF1S CSF1B CNTR
2	3.15		2.34	-0.64	-1.68	-0.01	0.01	-0.06
	-0.06	0.32E+06	2.35	-0.64	-1.68	-0.01	0.01	-0.06
	0.00	18.22	0.00	1.88	1.88	1.06	0.24	-0.05
3	2.83		2.43	-0.67	-1.75	-0.02	0.00	-0.05
	-0.06	0.31E+06	2.43	-0.68	-1.75	-0.02	0.00	-0.05
	0.00	32.75	0.00	2.04	2.04	1.08	0.28	-0.05
4	3.04		2.24	-0.61	-1.70	-0.02	0.00	-0.07
	-0.10	0.31E+06	2.24	-0.60	-1.70	-0.02	0.00	-0.07
	0.00	65.84	0.00	1.96	1.96	0.94	0.31	-0.05

PROPULSIVE WING FORCE DATA

SUMMARY. RUN 335

PT	Q ALPHA BETA	REY NO HEIGHT	CL1S CNF1B CNUC	CD1S CAF1B CNUM	CPM1S CPM1B CNUT	CRM1S CRM1B CLTR	CYM1S CYM1B CDTR	CSF1S CSF1B CNTR
2	0.00		23.22	-16.00	-638.10	-16.17	-4.72	-1.71
	0.00	0.30E+06	23.22	-16.00	-638.10	-16.17	-4.72	-1.71
	-0.34	73.66	0.00	48.87	48.87	-0.11	1.45	-818.70
3	0.00		39.80	-27.64	-1082.00	-20.22	-11.66	-1.21
	-0.02	0.30E+06	39.81	-27.63	-1082.00	-20.22	-11.65	-1.21
	-0.34	73.66	0.00	83.16	83.16	-0.66	1.12	-1049.00
4	0.00		59.81	-42.04	-1607.00	-31.12	-9.64	-2.72
	-0.04	0.30E+06	59.84	-41.98	-1607.00	-31.12	-9.61	-2.72
	-0.34	73.66	0.00	117.00	117.00	2.55	-1.64	-1561.00
5	0.00		82.50	-57.00	-2190.00	-43.30	-26.95	-2.34
	-0.07	0.30E+06	82.57	-56.86	-2190.00	-43.33	-26.88	-2.34
	-0.34	73.66	0.00	152.00	152.00	9.13	-4.97	-2131.00
6	0.00		109.10	-75.75	-2910.00	-61.49	-53.38	-1.56
	-0.11	0.30E+06	109.20	-75.55	-2910.00	-61.59	-53.27	-1.56
	-0.34	73.66	0.00	192.80	192.80	16.52	-8.99	-2834.00

PROPULSIVE WING FORCE DATA

SUMMARY. RUN 336

PT	Q ALPHA BETA	REY NO HEIGHT	CL1S CNF1B CNUC	CD1S CAF1B CNUM	CPM1S CPM1B CNUT	CRM1S CRM1B CLTR	CYM1S CYM1B CDTR	CSF1S CSF1B CNTR
29	0.00		80.78	-42.07	-1561.00	-19.95	5.03	-0.01
	-0.08	0.30E+06	80.84	-41.99	-1561.00	-19.94	5.06	-0.01
	0.00	65.71	0.00	87.22	87.22	32.44	-21.31	-1538.00
30	0.00		86.55	-55.67	-2123.00	-26.73	-1.81	-0.18
	-0.10	0.30E+06	86.65	-55.52	-2123.00	-26.73	-1.86	-0.18
	.0.00	65.71	0.00	117.40	117.40	41.84	-28.00	-2081.00
31	0.00		101.70	-71.50	-2684.00	-37.88	-21.61	-0.08
	-0.13	0.30E+06	101.80	-71.28	-2684.00	-37.91	-21.52	-0.08
	0.00	65.71	0.00	150.50	150.50	52.16	-38.39	-2644.00
32	0.00		103.80	-76.82	-2893.00	-50.80	18.23	-8.28
	-0.17	0.30E+06	103.80	-76.62	-2893.00	-50.75	18.38	-8.28
	0.00	65.71	0.00	189.80	189.80	50.77	-39.49	-2850.00

PROPULSIVE WING FORCE DATA

SUMMARY, RUN 337

PT	Q ALPHA BETA	REY NO HEIGHT	CL1S CNF1B CNUC	CD1S CAF1B CNWW	CPM1S CPM1B CMWT	CMM1S CMM1B CLTR	CYM1S CYM1B CDTR	CSF1S CSF1B CNTR
2	30.12		0.51	0.11	-0.29	0.00	0.00	0.01
	-0.04	0.94E+06	0.51	0.11	-0.29	0.00	0.00	0.01
	0.00	10.18	0.00	0.00	0.00	0.48	0.13	-0.27
3	29.77		0.50	0.12	-0.29	0.00	0.00	0.01
	-0.05	0.93E+06	0.49	0.12	-0.29	0.00	0.00	0.01
	0.00	32.05	0.00	0.00	0.00	0.48	0.13	-0.27
4	29.77		0.48	0.12	-0.29	0.00	0.00	0.01
	0.01	0.93E+06	0.48	0.12	-0.29	0.00	0.00	0.01
	0.00	65.60	0.00	0.00	0.00	0.46	0.14	-0.27
5	30.35		0.48	0.12	-0.28	0.00	0.00	0.01
	-0.02	0.94E+06	0.48	0.12	-0.28	0.00	0.00	0.01
	0.00	87.00	0.00	0.00	0.00	0.45	0.14	-0.26

PROPULSIVE WING FORCE DATA

SUMMARY, RUN 338

PT	Q ALPHA BETA	REY NO HEIGHT	CL1S CNF1B CNUC	CD1S CAF1B CNWW	CPM1S CPM1B CMWT	CMM1S CMM1B CLTR	CYM1S CYM1B CDTR	CSF1S CSF1B CNTR
1	21.15		1.78	0.03	-1.12	0.00	-0.01	0.02
	-0.23	0.79E+06	1.78	0.04	-1.12	0.00	-0.01	0.02
	0.00	10.20	0.00	0.53	0.53	1.41	0.27	-0.83
2	21.04		1.81	0.10	-1.18	0.00	0.00	0.02
	-0.05	0.78E+06	1.81	0.10	-1.18	0.00	0.00	0.02
	0.00	32.83	0.00	0.53	0.53	1.45	0.34	-0.88
3	20.81		1.80	0.12	-1.19	0.00	-0.01	0.02
	0.00	0.78E+06	1.80	0.12	-1.19	0.00	-0.01	0.02
	0.00	65.60	0.00	0.54	0.54	1.43	0.37	-0.88
4	21.04		1.78	0.12	-1.18	0.00	-0.01	0.02
	-0.02	0.79E+06	1.78	0.12	-1.18	0.00	-0.01	0.02
	0.00	87.60	0.00	0.54	0.54	1.41	0.37	-0.87

PROPULSIVE WING FORCE DATA

SUMMARY, RUN 320

PT	Q ALPHA BETA	REY NO HEIGHT	CL1S CNF1G CNUC	CD1S CAF1G CNUU	CPM1S CPM1G CMUT	CNM1S CNM1G CLTR	CYM1S CYM1G CNTR	CSF1S CSF1G CNTR
1	10.56		2.25	-0.10	-1.47	-0.01	-0.01	0.04
	0.06	0.50E+06	2.25	-0.10	-1.47	-0.01	-0.01	0.04
	0.00	20.00	0.00	1.07	1.07	1.51	0.31	-0.06
2	10.46		2.30	-0.10	-1.50	0.00	-0.01	0.03
	0.00	0.50E+06	2.30	-0.10	-1.50	0.00	-0.01	0.03
	0.00	32.01	0.00	1.06	1.06	1.04	0.41	-0.07
3	10.46		2.25	-0.08	-1.50	0.00	-0.01	0.03
	-0.02	0.50E+06	2.25	-0.08	-1.50	0.00	-0.01	0.03
	0.00	85.00	0.00	1.00	1.00	1.00	0.44	-0.37
4	10.01		2.30	-0.07	-1.55	0.00	-0.01	0.02
	-0.01	0.50E+06	2.30	-0.07	-1.55	0.00	-0.01	0.02
	0.00	87.01	0.00	1.05	1.05	1.57	0.43	-0.05

PROPULSIVE WING FORCE DATA

SUMMARY, RUN 340

PT	Q ALPHA BETA	REY NO HEIGHT	CL1S CNF1G CNUC	CD1S CAF1G CNUU	CPM1S CPM1G CMUT	CNM1S CNM1G CLTR	CYM1S CYM1G CNTR	CSF1S CSF1G CNTR
1	5.00		2.00	-0.08	-1.72	0.03	-0.01	0.00
	0.04	0.40E+06	2.00	-0.08	-1.72	0.03	-0.01	0.00
	0.00	10.53	0.00	2.11	2.11	1.23	0.30	-0.52
2	5.20		3.22	-0.56	-2.25	0.00	0.00	0.01
	-0.02	0.40E+06	3.22	-0.56	-2.25	0.00	0.00	0.01
	0.00	32.01	0.00	2.16	2.16	1.73	0.46	-1.02
3	5.52		3.13	-0.47	-2.22	0.00	0.00	0.02
	0.00	0.40E+06	3.13	-0.47	-2.22	0.00	0.00	0.02
	0.00	85.00	0.00	2.07	2.07	1.70	0.51	-1.05
4	5.20		3.23	-0.56	-2.34	-0.01	0.00	0.03
	-0.02	0.40E+06	3.23	-0.56	-2.34	-0.01	0.00	0.03
	0.00	87.00	0.00	2.17	2.17	1.73	0.53	-1.10

PROPULSIVE WING FORCE DATA

SUMMARY, RUN 341

PT	Q ALPHA BETA	REY NO HEIGHT	CL IS CAF IS CNUC	CD IS CAF IS CNUA	CPN IS CYN IS CNUT	CBN IS CBN IS CLTD	CYN IS CYN IS CDTD	CSF IS CSF IS CNTD
1	2.76 0.00 0.00	0.20E+06 10.20	3.06 3.06 0.00	-1.75 -1.75 4.16	-2.34 -2.34 4.16	0.04 0.04 0.10	0.02 0.02 0.23	-0.07 -0.07 0.13
2	2.41 -0.05 0.00	0.27E+06 32.70	5.34 5.34 0.00	-1.05 -1.05 4.77	-3.00 -3.00 4.77	0.00 0.00 2.00	-0.01 -0.01 0.00	0.00 0.00 -1.00
3	2.05 0.00 0.00	0.20E+06 05.01	5.10 5.10 0.00	-1.40 -1.40 4.35	-3.50 -3.50 4.35	-0.01 -0.01 2.30	-0.01 -0.01 0.05	0.04 0.04 -1.00
4	2.05 -0.01 0.00	0.20E+06 00.00	5.15 5.15 0.00	-1.30 -1.30 4.36	-3.50 -3.50 4.36	-0.01 -0.01 2.15	-0.01 -0.01 0.07	0.00 0.00 -1.11

PROPULSIVE WING FORCE DATA

SUMMARY, RUN 342

PT	Q ALPHA BETA	REY NO HEIGHT	CL IS CAF IS CNUC	CD IS CAF IS CNUA	CPN IS CPN IS CNUT	CBN IS CBN IS CLTD	CYN IS CYN IS CDTD	CSF IS CSF IS CNTD
1	1.24 0.02 0.00	0.10E+06 00.00	0.01 0.00 0.00	-3.40 -3.40 0.00	-0.00 -0.00 0.00	-0.02 -0.02 1.00	-0.01 -0.01 0.73	0.11 0.11 -0.00
2	1.25 -0.01 0.00	0.20E+06 10.20	5.25 5.25 0.00	-3.70 -3.70 0.17	-4.20 -4.20 0.17	-0.01 -0.01 -0.40	-0.00 -0.00 0.10	-0.07 -0.07 0.41
3	1.24 -0.02 0.00	0.10E+06 32.00	7.77 7.77 0.00	-3.00 -3.00 0.00	-5.00 -5.00 0.00	-0.00 -0.00 1.50	-0.02 -0.02 0.57	0.13 0.13 -0.00
4	1.25 -0.01 0.00	0.20E+06 00.00	7.00 7.00 0.00	-3.10 -3.10 0.17	-5.01 -5.01 0.17	-0.03 -0.03 2.00	0.01 0.01 0.00	0.02 0.02 -0.00
5	1.47 -0.02 0.00	0.21E+06 : 07.01	0.00 0.00 0.00	-2.05 -2.05 7.53	-5.20 -5.20 7.53	-0.03 -0.03 1.04	0.00 0.00 0.01	0.07 0.07 -0.00

PROPULSIVE WING FORCE DATA

SUMMARY, RUN 343

PT	Q ALPHA BETA	REY NO HEIGHT	CL IS CNF NO CNUC	CD IS CAF NO CNUA	CPN IS CPN NO CNUT	CBN IS CBN NO CLTR	CYN IS CYN NO CBTR	CSF IS CSF NO CNTR
1	1.13 0.00 0.00	0.10E+06 57.24	10.11 0.00 0.00	-2.54 -3.03 0.00	-0.72 -0.72 0.00	-0.03 -0.02 2.00	0.00 0.00 1.11	0.02 0.02 -1.11
2	1.20 0.04 0.00	0.20E+06 80.80	0.00 0.23 0.00	-2.06 -3.24 0.16	-0.07 -0.07 0.16	-0.03 -0.03 2.41	0.00 0.00 0.00	-0.02 -0.02 -1.10
3	1.47 0.03 0.00	0.31E+06 87.06	7.04 7.30 0.00	-1.02 -2.07 7.57	-0.50 -0.50 7.57	-0.02 -0.02 1.03	-0.01 -0.01 0.00	0.00 0.00 -1.27

PROPULSIVE WING FORCE DATA

SUMMARY, RUN 344

PT	Q ALPHA BETA	REY NO HEIGHT	CL IS CNF NO CNUC	CD IS CAF NO CNUA	CPN IS CPN NO CNUT	CBN IS CBN NO CLTR	CYN IS CYN NO CBTR	CSF IS CSF NO CNTR
1	2.50 0.05 0.00	0.20E+06 48.20	5.50 5.44 0.00	-0.72 -1.50 4.26	-3.04 -3.04 4.26	-0.01 0.00 2.36	-0.02 -0.02 0.00	0.07 0.07 -1.10
2	2.50 0.03 0.00	0.20E+06 85.00	5.50 5.43 0.00	-0.70 -1.47 4.20	-3.71 -3.71 4.20	-0.01 -0.01 2.35	0.00 0.00 0.00	-0.03 -0.03 -1.27
3	2.70 0.02 0.00	0.20E+06 87.03	5.31 5.17 0.00	-0.05 -1.30 4.11	-3.01 -3.01 4.11	0.00 0.00 2.31	0.00 0.00 0.07	-0.02 -0.02 -1.27

PROPULSIVE WING FORCE DATA

SUMMARY, RUN 345

PT	Q ALPHA BETA	REY NO HEIGHT	CL15 CNF10 CNUC	CD15 CAF10 CNUW	CPM15 CPM10 CMUT	CRM15 CRM10 CLTR	CYM15 CYM10 CDTR	CSF15 CSF10 CNTR
1	2.70		3.20	-1.74	-2.20	0.02	0.03	0.05
	-0.01	0.20E+06	3.20	-1.74	-2.20	0.02	0.03	0.05
	0.00	10.48	0.00	4.12	4.12	0.33	0.22	0.10
2	2.50		4.70	-1.53	-3.30	-0.01	-0.02	0.01
	0.00	0.20E+06	4.70	-1.53	-3.30	-0.01	-0.02	0.01
	0.00	32.86	0.00	4.20	4.20	1.71	0.51	-0.01
3	2.70		4.40	-1.00	-3.30	-0.01	0.00	0.03
	-0.03	0.20E+06	4.40	-1.30	-3.30	-0.01	0.00	0.03
	0.00	85.54	0.00	4.11	4.11	1.63	0.55	-1.04
4	2.70		4.54	-1.37	-3.42	-0.01	-0.01	0.05
	0.05	0.20E+06	4.54	-1.30	-3.42	-0.01	-0.01	0.05
	0.00	87.06	0.00	4.11	4.11	1.70	0.56	-1.06

PROPULSIVE WING FORCE DATA

SUMMARY, RUN 346

PT	Q ALPHA BETA	REY NO HEIGHT	CL15 CNF10 CNUC	CD15 CAF10 CNUW	CPM15 CPM10 CMUT	CRM15 CRM10 CLTR	CYM15 CYM10 CDTR	CSF15 CSF10 CNTR
1	5.41		2.06	-0.70	-1.75	0.06	-0.03	0.03
	-0.02	0.40E+06	2.06	-0.70	-1.75	0.06	-0.03	0.03
	0.00	10.53	0.00	2.06	2.06	1.23	0.26	-0.57
2	5.52		3.05	-0.54	-2.06	0.00	0.00	0.02
	0.01	0.41E+06	3.05	-0.54	-2.06	0.00	0.00	0.02
	0.00	32.85	0.00	2.03	2.03	1.04	0.42	-0.93
3	5.41		3.14	-0.49	-2.18	-0.01	0.00	0.03
	-0.01	0.40E+06	3.14	-0.49	-2.18	-0.01	0.00	0.03
	0.00	85.68	0.00	2.05	2.05	1.71	0.48	-1.01
4	5.30		3.13	-0.51	-2.24	-0.01	0.00	0.02
	-0.03	0.40E+06	3.13	-0.51	-2.24	-0.01	0.00	0.02
	0.00	87.06	0.00	2.10	2.10	1.67	0.48	-1.04

PROPULSIVE WING FORCE DATA

SUMMARY, RUN 347

PT	Q ALPHA BETA	REY NO HEIGHT	CL IS CDF IS CNUC	CD IS CAF IS CNUW	CPR IS CPN IS CNUT	CNR IS CNN IS CLTR	CYR IS CYN IS CDTR	CSF IS CSF IS CNTR
1	5.16 0.01 0.00	0.30E+06 48.17	3.79 3.74 0.00	-0.06 -0.58 2.15	-2.36 -2.36 2.15	0.00 0.00 2.16	0.00 0.00 0.74	0.02 0.02 -1.13
2	5.41 0.07 0.00	0.40E+06 65.78	3.58 3.04 0.00	-0.02 -0.54 2.06	-2.33 -2.32 2.06	-0.01 -0.01 2.12	0.00 -0.01 0.75	0.00 0.00 -1.15
3	5.30 0.08 0.00	0.40E+06 86.71	3.73 3.08 0.00	-0.01 -0.54 2.10	-2.41 -2.41 2.10	-0.01 -0.01 2.14	-0.01 -0.01 0.77	0.00 0.00 -1.21

PROPULSIVE WING FORCE DATA

SUMMARY, RUN 348

PT	Q ALPHA BETA	REY NO HEIGHT	CL IS CDF IS CNUC	CD IS CAF IS CNUW	CPR IS CPN IS CNUT	CNR IS CNN IS CLTR	CYR IS CYN IS CDTR	CSF IS CSF IS CNTR
1	5.30 0.06 5.01	0.40E+06 48.44	3.75 3.71 0.00	-0.05 -0.56 2.11	-2.35 -2.35 2.11	-0.01 -0.01 2.17	0.00 -0.01 0.73	-0.10 -0.10 -1.15
2	5.41 0.07 5.01	0.40E+06 65.88	3.06 3.02 0.00	-0.02 -0.53 2.06	-2.32 -2.32 2.06	0.00 0.00 2.11	0.01 0.01 0.75	-0.06 -0.06 -1.15
3	5.41 0.06 5.01	0.40E+06 86.75	3.08 3.05 0.00	-0.01 -0.52 2.06	-2.33 -2.33 2.06	0.00 0.00 2.13	0.00 0.00 0.76	-0.07 -0.07 -1.15

PROPULSIVE WING FORCE DATA

SUMMARY, RUN 340

PT	Q ALPHA BETA	NET NO WEIGHT	CL IS CDF IS CNUC	CD IS CAF IS CNUM	CPNIS CPNIS CNUT	CBNIS CBNIS CLTR	CYNIS CYNIS CDTR	CSF IS CSF IS CNTR
1	5.30		2.04	-0.71	-1.06	-0.06	0.02	-0.07
	0.02	0.40E+06	2.04	-0.71	-1.06	-0.06	0.02	-0.07
	5.01	10.00	0.00	2.11	2.11	1.37	0.28	-0.76
2	5.41		3.12	-0.95	-2.16	-0.01	0.00	-0.04
	0.02	0.40E+06	3.12	-0.95	-2.16	-0.01	0.00	-0.04
	5.01	32.81	0.00	2.07	2.07	1.00	0.42	-0.00
3	5.32		3.07	-0.90	-2.12	-0.01	0.00	-0.06
	0.00	0.41E+06	3.07	-0.90	-2.12	-0.01	0.00	-0.06
	5.01	65.63	0.00	2.02	2.02	1.07	0.45	-0.07
4	5.30		3.15	-0.52	-2.21	-0.01	0.01	-0.07
	-0.02	0.40E+06	3.15	-0.52	-2.21	-0.01	0.01	-0.07
	5.01	87.00	0.00	2.11	2.11	1.70	0.47	-1.02

PROPULSIVE WING FORCE DATA

SUMMARY, RUN 350

PT	Q ALPHA BETA	NET NO WEIGHT	CL IS CDF IS CNUC	CD IS CAF IS CNUM	CPNIS CPNIS CNUT	CBNIS CBNIS CLTR	CYNIS CYNIS CDTR	CSF IS CSF IS CNTR
1	10.50		2.23	-0.20	-1.45	-0.02	-0.01	-0.03
	-0.02	0.50E+06	2.23	-0.20	-1.45	-0.02	-0.01	-0.03
	5.01	10.70	0.00	1.06	1.06	1.50	0.30	-0.05
2	10.50		2.27	-0.12	-1.53	-0.01	0.00	-0.05
	0.02	0.50E+06	2.27	-0.13	-1.53	-0.01	0.00	-0.05
	5.01	32.00	0.00	1.06	1.06	1.54	0.30	-0.03
3	10.50		2.26	-0.10	-1.51	-0.01	0.00	-0.06
	0.00	0.50E+06	2.26	-0.10	-1.51	-0.01	0.00	-0.06
	5.01	65.00	0.00	1.06	1.06	1.53	0.40	-0.01
4	10.48		2.26	-0.10	-1.54	-0.01	0.00	-0.06
	-0.01	0.50E+06	2.26	-0.10	-1.54	-0.01	0.00	-0.06
	5.01	87.00	0.00	1.07	1.07	1.52	0.41	-0.03

PROPULSIVE WING FORCE DATA

SUMMARY, RUN 301

PT	Q ALPHA BETA	REY NO HEIGHT	CL1S CNF1S CNUC	CD1S CAF1S CNUN	CPM1S CPN1S CNUT	CBM1S CBN1S CLTR	CYM1S CYN1S CDTR	CSF1S CSF1S CNTR
1	10.40		2.81	0.26	-1.00	0.00	0.00	-0.00
	0.03	0.50E+06	2.82	-0.14	-1.00	0.00	0.00	-0.00
	0.01	48.34	0.00	1.07	1.07	2.01	0.00	-1.00
2	10.50		2.78	0.27	-1.00	0.00	0.00	-0.07
	0.01	0.50E+06	2.79	-0.12	-1.00	0.00	0.00	-0.07
	0.01	86.07	0.00	1.06	1.06	1.98	0.00	-1.00
3	10.50		2.78	0.27	-1.00	0.00	0.00	-0.07
	0.01	0.50E+06	2.79	-0.12	-1.00	0.00	0.00	-0.07
	0.01	87.03	0.00	1.06	1.06	1.98	0.07	-1.00

PROPULSIVE WING FORCE DATA

SUMMARY, RUN 302

PT	Q ALPHA BETA	REY NO HEIGHT	CL1S CNF1S CNUC	CD1S CAF1S CNUN	CPM1S CPN1S CNUT	CBM1S CBN1S CLTR	CYM1S CYN1S CDTR	CSF1S CSF1S CNTR
1	10.50		2.83	0.26	-1.70	0.00	-0.01	0.03
	0.04	0.57E+06	2.84	-0.13	-1.70	0.00	-0.01	0.03
	0.09	48.35	0.00	1.08	1.08	2.04	0.05	-1.10
2	10.50		2.80	0.27	-1.00	-0.01	-0.01	0.00
	0.02	0.57E+06	2.81	-0.12	-1.00	0.00	-0.01	0.02
	0.00	86.02	0.00	1.06	1.06	2.01	0.00	-1.00
3	10.48		2.81	0.26	-1.71	0.00	-0.01	0.02
	0.01	0.56E+06	2.82	-0.12	-1.71	0.00	-0.01	0.00
	0.00	86.73	0.00	1.07	1.07	2.01	0.07	-1.11

PROPULSIVE WING FORCE DATA

SUMMARY, RUN 353

PT	Q ALPHA BETA	REY NO HEIGHT	CL15 CAF10 CNUC	CD15 CAF10 CNUH	CPM15 CPM10 CNUT	CBM15 CBM10 CLTD	CYM15 CYM10 CDTD	CS/15 CS/10 CNTD
1	10.50		2.22	-0.20	-1.45	0.00	-0.01	0.02
	0.01	0.57E+00	2.22	-0.20	-1.45	0.00	-0.01	0.02
	0.00	10.00	0.00	1.00	1.00	1.40	0.30	-0.00
2	10.40		2.20	-0.12	-1.96	0.00	-0.01	0.03
	-0.02	0.50E+00	2.30	-0.12	-1.96	0.00	-0.01	0.03
	0.00	32.00	0.00	1.07	1.07	1.54	0.30	-0.04
3	10.40		2.27	-0.08	-1.95	0.00	-0.01	0.04
	-0.04	0.50E+00	2.30	-0.08	-1.95	0.00	-0.01	0.04
	0.70	85.00	0.00	1.07	1.07	1.54	0.41	-0.05
4	10.40		2.25	-0.10	-1.54	-0.01	-0.01	0.03
	-0.00	0.50E+00	2.25	-0.00	-1.54	-0.01	-0.01	0.03
	0.00	87.00	0.00	1.07	1.07	1.52	0.41	-0.03

PROPULSIVE WING FORCE DATA

SUMMARY, RUN 354

PT	Q ALPHA BETA	REY NO HEIGHT	CL15 CAF10 CNUC	CD15 CAF10 CNUH	CPM15 CPM10 CNUT	CBM15 CBM10 CLTD	CYM15 CYM10 CDTD	CS/15 CS/10 CNTD
1	21.10		1.70	0.04	-1.13	0.00	-0.01	0.02
	-0.01	0.00E+00	1.70	0.04	-1.13	0.00	-0.01	0.02
	0.00	27.00	0.00	0.53	0.53	1.42	0.30	-0.03
2	21.07		1.70	0.00	-1.15	0.00	-0.01	0.02
	-0.00	0.00E+00	1.70	0.00	-1.15	0.00	-0.01	0.02
	0.00	32.07	0.00	0.53	0.53	1.42	0.33	-0.00
3	21.10		1.75	0.10	-1.15	0.00	-0.01	0.02
	-0.00	0.00E+00	1.75	0.10	-1.15	0.00	-0.01	0.02
	0.00	85.07	0.00	0.53	0.53	1.30	0.35	-0.00
4	21.10		1.77	0.11	-1.15	0.00	-0.01	0.00
	0.00	0.00E+00	1.77	0.11	-1.15	0.00	-0.01	0.02
	0.00	97.00	0.00	0.53	0.53	1.40	0.30	-0.00

PROPULSIVE WING FORCE DATA

SUMMARY, RUN 306

PT	Q ALPHA DELTA	SET NO HEIGHT	CL15 CAF15 CNAC	CD15 CAF15 CNAN	CPN15 CPN15 CNUT	CNN15 CNN15 CLTB	CYN15 CYN15 CDTB	CSF15 CSF15 CNTB
1	21.10 5.02 5.00	0.000+00 40.41	2.26 2.28 0.00	0.30 0.08 0.53	-1.30 -1.30 0.53	0.00 0.00 1.07	-0.01 -0.01 0.57	0.03 0.03 -1.00
2	21.20 5.01 5.00	0.000+00 80.04	2.26 2.28 0.00	0.30 0.07 0.53	-1.30 -1.30 0.53	0.00 0.00 1.08	-0.01 -0.01 0.58	0.02 0.02 -1.00
3	21.20 7.98 0.00	0.000+00 87.00	2.22 2.25 0.00	0.30 0.07 0.53	-1.29 -1.30 0.53	0.00 0.00 1.03	-0.01 -0.01 0.58	0.01 0.01 -0.00

PROPULSIVE WING FORCE DATA

SUMMARY, RUN 306

PT	Q ALPHA DELTA	SET NO HEIGHT	CL15 CAF15 CNAC	CD15 CAF15 CNAN	CPN15 CPN15 CNUT	CNN15 CNN15 CLTB	CYN15 CYN15 CDTB	CSF15 CSF15 CNTB
1	21.10 5.02 5.01	0.000+00 40.40	2.27 2.30 0.00	0.30 0.08 0.53	-1.30 -1.30 0.53	0.00 0.00 1.08	0.00 0.00 0.57	-0.00 -0.00 -1.00
2	21.10 5.00 5.01	0.000+00 80.00	2.23 2.28 0.00	0.30 0.07 0.53	-1.30 -1.30 0.53	0.00 0.00 1.08	0.00 0.00 0.58	-0.07 -0.07 -1.00
3	21.07 5.05 5.01	0.000+00 87.21	2.24 2.27 0.00	0.30 0.07 0.53	-1.30 -1.30 0.53	0.00 0.00 1.08	0.00 0.00 0.58	-0.07 -0.07 -1.00

PROPULSIVE WING FORCE DATA

SUMMARY, RUN 307

PT	Q ALPHA DETA	REY NO HEIGHT	CL15 CNF10 CNUC	CD15 CAF10 CNUA	CPM15 CPM10 CMST	CBM15 CSM10 CLTR	CYM15 CYM10 CDTR	CSF15 CSF10 CNTR
1	21.18		1.70	0.03	-1.13	-0.01	-0.01	-0.04
	0.01	0.00E+00	1.70	0.03	-1.13	-0.01	-0.01	-0.04
	5.01	20.21	0.00	0.53	0.53	1.43	0.26	-0.03
2	21.07		1.80	0.08	-1.15	-0.01	0.00	-0.05
	-0.03	0.00E+00	1.80	0.08	-1.15	-0.01	0.00	-0.05
	5.01	22.81	0.00	0.53	0.53	1.43	0.23	-0.05
3	21.18		1.70	0.10	-1.15	-0.01	0.00	-0.06
	-0.05	0.00E+00	1.70	0.10	-1.15	-0.01	0.00	-0.06
	5.01	55.04	0.00	0.53	0.53	1.30	0.25	-0.05
4	21.07		1.75	0.10	-1.15	0.01	0.00	-0.06
	-0.07	0.00E+00	1.75	0.10	-1.15	-0.01	0.00	-0.06
	5.01	57.06	0.00	0.53	0.53	1.30	0.25	-0.05

PROPULSIVE WING FORCE DATA

SUMMARY, RUN 308

PT	Q ALPHA DETA	REY NO HEIGHT	CL15 CNF10 CNUC	CD15 CAF10 CNUA	CPM15 CPM10 CMST	CBM15 CBM10 CLTR	CYM15 CYM10 CDTR	CSF15 CSF10 CNTR
1	30.10		0.52	0.11	-0.20	0.00	0.00	-0.05
	-0.01	0.95E+06	0.52	0.11	-0.20	0.00	0.00	-0.05
	5.01	10.36	0.00	0.00	0.00	0.51	0.10	-0.20
2	30.10		0.40	0.11	-0.20	0.00	0.00	-0.05
	-0.03	0.95E+06	0.40	0.11	-0.20	0.00	0.00	-0.05
	5.01	22.63	0.00	0.00	0.00	0.47	0.10	-0.20
3	30.07		0.40	0.12	-0.20	0.00	0.00	-0.05
	-0.05	0.95E+06	0.40	0.12	-0.20	0.00	0.00	-0.05
	5.01	35.04	0.00	0.00	0.00	0.45	0.10	-0.20
4	30.31		0.40	0.12	-0.20	0.00	0.00	-0.04
	0.00	0.95E+06	0.40	0.12	-0.20	0.00	0.00	-0.04
	5.01	57.22	0.00	0.00	0.00	0.45	0.10	-0.20

PROPULSIVE WING FORCE DATA

SUMMARY, RUN 350

PT	Q ALPHA BETA	REY NO HEIGHT	CL1S CRF1B CRWC	CD1S CAF1B CRWW	CPR1S CPR1B CRWT	CBR1S CBR1B CLTR	CYR1S CYR1B CDTR	CSF1S CSF1B CRTR
1	30.10		0.03	0.20	-0.35	0.00	-0.01	-0.05
	8.05	0.95E+06	0.05	0.08	-0.35	0.00	-0.01	-0.05
	5.01	47.50	0.00	0.00	0.00	0.01	0.24	-0.33
2	30.00		0.00	0.10	-0.34	0.00	0.00	-0.05
	8.03	0.95E+06	0.02	0.08	-0.34	0.00	0.00	-0.05
	5.01	85.61	0.00	0.00	0.00	0.78	0.24	-0.31
3	29.85		0.00	0.20	-0.34	0.00	0.00	-0.05
	8.02	0.95E+06	0.02	0.08	-0.34	0.00	0.00	-0.05
	5.01	87.00	0.00	0.00	0.00	0.78	0.24	-0.31

PROPULSIVE WING FORCE DATA

SUMMARY, RUN 300

PT	Q ALPHA BETA	REY NO HEIGHT	CL1S CRF1B CRWC	CD1S CAF1B CRWW	CPR1S CPR1B CRWT	CBR1S CBR1B CLTR	CYR1S CYR1B CDTR	CSF1S CSF1B CRTR
1	30.10		0.00	0.10	-0.33	0.00	0.00	0.01
	8.07	0.95E+06	0.01	0.08	-0.33	0.00	0.00	0.01
	0.00	47.50	0.00	0.00	0.00	0.78	0.24	-0.30
2	30.00		0.00	0.20	-0.34	0.00	0.00	0.01
	8.05	0.95E+06	0.02	0.08	-0.34	0.00	0.00	0.01
	0.00	85.67	0.00	0.00	0.00	0.78	0.24	-0.31
3	30.00		0.70	0.10	-0.34	0.00	0.00	0.01
	8.04	0.95E+06	0.01	0.08	-0.34	0.00	0.00	0.01
	0.00	87.01	0.00	0.00	0.00	0.77	0.24	-0.31

PROPULSIVE WING FORCE DATA

SUMMARY, RUN 361

PT	Q ALPHA BETA	REY NO HEIGHT	CL1S CNF1B CNUC	CD1S CAF1B CNUM	CPM1S CPM1B CNUT	CNM1S CNM1B CLTR	CYN1S CYN1B CDTR	CSF1S CSF1B CNTR
1	29.74		0.53	0.11	-0.29	0.00	0.00	0.02
	-0.01	0.84E+06	0.53	0.11	-0.29	0.00	0.00	0.02
	0.00	19.15	0.00	0.00	0.00	0.51	0.16	-0.26
2	29.85		0.48	0.11	-0.28	0.00	0.00	0.01
	-0.03	0.95E+06	0.48	0.11	-0.28	0.00	0.00	0.01
	0.00	32.82	0.00	0.00	0.00	0.47	0.16	-0.24
3	30.31		0.46	0.12	-0.27	0.00	0.00	0.02
	-0.06	0.95E+06	0.46	0.12	-0.27	0.00	0.00	0.02
	0.00	65.68	0.00	0.00	0.00	0.45	0.16	-0.24
4	30.31		0.45	0.11	-0.27	0.00	0.00	0.01
	-0.07	0.95E+06	0.45	0.11	-0.27	0.00	0.00	0.01
	0.00	87.08	0.00	0.00	0.00	0.44	0.16	-0.24

PROPULSIVE WING FORCE DATA

SUMMARY, RUN 362

PT	Q ALPHA BETA	REY NO HEIGHT	CL1S CNF1B CNUC	CD1S CAF1B CNUM	CPM1S CPM1B CNUT	CNM1S CNM1B CLTR	CYN1S CYN1B CDTR	CSF1S CSF1B CNTR
2	30.12		0.46	0.12	-0.28	0.00	-0.01	0.01
	0.03	0.96E+06	0.46	0.12	-0.28	0.00	-0.01	0.01
	0.00	87.42	0.00	0.00	0.00	0.45	0.17	-0.25
3	30.12		0.83	0.15	-0.31	0.00	0.00	0.01
	4.06	0.96E+06	0.83	0.11	-0.31	0.00	0.00	0.01
	0.00	87.32	0.00	0.00	0.00	0.61	0.20	-0.26
4	30.00		0.80	0.20	-0.34	0.00	0.00	0.00
	8.06	0.95E+06	0.82	0.08	-0.34	0.00	0.00	0.00
	0.00	87.68	0.00	0.00	0.00	0.78	0.24	-0.31
5	30.00		1.02	0.28	-0.40	0.00	0.00	0.00
	12.04	0.95E+06	1.06	0.07	-0.40	0.00	0.00	0.00
	0.00	87.75	0.00	0.00	0.00	1.00	0.33	-0.36
6	30.12		1.13	0.41	-0.44	0.00	0.00	0.01
	16.07	0.96E+06	1.20	0.08	-0.44	0.00	0.00	0.01
	0.00	87.03	0.00	0.00	0.00	1.10	0.45	-0.41
7	29.54		1.10	0.61	-0.45	0.01	0.00	-0.01
	22.05	0.95E+06	1.33	0.12	-0.45	0.01	0.00	-0.01
	0.00	88.15	0.00	0.00	0.00	1.16	0.85	-0.42

PROPULSIVE WING FORCE DATA

SUMMARY, RUN 383

PT	Q ALPHA BETA	REY NO HEIGHT	CL1S CNF1B CNUC	CD1S CAF1B CNUM	CPM1S CPM1B CNUT	CNM1S CNM1B CLTR	CYM1S CYM1B CDTR	CSF1S CSF1B CNTR
1	16.55		1.91	0.06	-1.28	0.00	-0.01	0.02
	-0.02	0.71E+06	1.91	0.06	-1.28	0.00	-0.01	0.02
	0.00	88.05	0.00	0.66	0.66	1.45	0.39	-0.91
2	16.44		2.11	0.22	-1.32	0.00	-0.01	0.02
	4.05	0.71E+06	2.13	0.07	-1.32	0.00	-0.01	0.02
	0.00	87.40	0.00	0.63	0.63	1.65	0.49	-0.96
3	16.21		2.44	0.38	-1.44	0.00	-0.01	0.02
	8.06	0.70E+06	2.47	0.04	-1.44	0.00	-0.01	0.02
	0.00	87.35	0.00	0.87	0.87	1.93	0.63	-1.06
4	16.78		2.65	0.58	-1.47	0.00	-0.01	0.02
	12.08	0.72E+06	2.72	0.02	-1.47	0.00	-0.01	0.02
	0.00	87.09	0.00	0.85	0.85	2.15	0.79	-1.10
5	16.44		2.87	0.80	-1.52	0.01	-0.01	0.00
	16.04	0.71E+06	2.98	-0.02	-1.52	0.01	-0.01	0.00
	0.00	87.03	0.00	0.86	0.86	2.34	0.97	-1.14
6	15.86		3.09	1.17	-1.56	0.02	-0.02	0.00
	22.08	0.70E+06	3.30	-0.08	-1.56	0.03	-0.01	0.00
	0.00	99.03	0.00	0.89	0.89	2.52	1.29	-1.17

PROPULSIVE WING FORCE DATA

SUMMARY, RUN 384

PT	Q ALPHA BETA	REY NO HEIGHT	CL1S CNF1B CNUC	CD1S CAF1B CNUM	CPM1S CPM1B CNUT	CNM1S CNM1B CLTR	CYM1S CYM1B CDTR	CSF1S CSF1B CNTR
1	10.00		2.30	-0.06	-1.57	0.00	-0.01	0.02
	0.02	0.55E+06	2.30	-0.06	-1.57	0.00	-0.01	0.02
	0.00	87.07	0.00	1.06	1.06	1.56	0.44	-0.96
2	9.89		2.63	0.11	-1.64	0.00	-0.01	0.03
	4.09	0.55E+06	2.63	-0.08	-1.64	0.00	-0.01	0.03
	0.00	87.00	0.00	1.07	1.07	1.84	0.57	-1.02
3	10.00		2.91	0.32	-1.76	0.00	-0.01	0.02
	8.07	0.55E+06	2.93	-0.09	-1.76	0.00	-0.01	0.02
	0.00	87.03	0.00	1.06	1.06	2.10	0.72	-1.15
4	10.12		3.09	0.53	-1.79	0.00	-0.01	0.01
	12.03	0.56E+06	3.13	-0.12	-1.79	0.00	-0.01	0.01
	0.00	87.38	0.00	1.05	1.05	2.28	0.87	-1.19
5	10.12		3.31	0.79	-1.81	0.01	-0.01	0.00
	16.07	0.56E+06	3.40	-0.16	-1.81	0.01	-0.01	0.00
	0.00	87.11	0.00	1.05	1.05	2.46	1.06	-1.21
6	10.35		3.44	1.16	-1.80	0.03	-0.02	-0.01
	22.02	0.56E+06	3.62	-0.21	-1.80	0.03	-0.01	-0.01
	0.00	99.22	0.00	1.03	1.03	2.58	1.35	-1.21

PROPULSIVE WING FORCE DATA

SUMMARY, RUN 305

PT	Q ALPHA BETA	REY NO HEIGHT	CL1S CNF1B CNWC	CD1S CAF1B CNWW	CPR1S CPR1B CNWT	CNR1S CNR1B CLTR	CYR1S CYR1B CDTR	CSF1S CSF1B CNTR
1	5.00 0.03 0.00	0.41E+06 88.88	3.07 3.07 0.00	-0.41 -0.41 1.96	-2.17 -2.17 1.96	-0.01 -0.01 1.00	-0.02 -0.02 0.52	0.04 0.04 -1.04
2	5.17 4.03 0.00	0.40E+06 87.23	3.44 3.42 0.00	-0.22 -0.40 2.04	-2.34 -2.34 2.04	-0.01 -0.01 1.03	-0.01 -0.01 0.05	0.02 0.02 -1.16
3	5.06 8.02 0.00	0.39E+06 87.74	3.91 3.88 0.00	0.05 -0.40 2.00	-2.46 -2.45 2.00	-0.01 0.00 2.30	-0.02 -0.02 0.04	0.01 0.01 -1.25
4	5.29 12.06 0.00	0.40E+06 88.58	4.00 4.05 0.00	0.37 -0.48 2.00	-2.46 -2.46 2.00	0.00 0.00 2.47	-0.02 -0.02 1.01	-0.01 -0.01 -1.30
5	5.06 18.12 0.00	0.39E+06 87.40	4.43 4.45 0.00	0.80 -0.58 2.10	-2.55 -2.55 2.10	0.00 0.01 2.72	-0.02 -0.02 1.25	0.01 0.01 -1.34
6	5.00 22.00 0.00	0.41E+06 90.57	4.52 4.05 0.00	1.22 -0.57 1.97	-2.50 -2.50 1.97	0.02 0.02 2.87	-0.03 -0.02 1.58	-0.02 -0.02 -1.36

PROPULSIVE WING FORCE DATA

SUMMARY, RUN 306

PT	Q ALPHA BETA	REY NO HEIGHT	CL1S CNF1B CNWC	CD1S CAF1B CNWW	CPR1S CPR1B CNWT	CNR1S CNR1B CLTR	CYR1S CYR1B CDTR	CSF1S CSF1B CNTR
1	1.38 0.05 0.00	0.21E+06 87.54	7.46 7.46 0.00	-2.81 -2.81 7.73	-5.00 -5.00 7.73	-0.05 -0.05 1.99	-0.05 -0.05 0.78	0.20 0.20 -1.14
2	1.27 4.02 0.00	0.20E+06 87.24	8.00 8.39 0.00	-2.64 -3.23 8.44	-5.14 -5.14 8.44	-0.04 -0.04 2.36	-0.06 -0.06 0.87	0.03 0.03 -1.27
3	1.15 8.08 0.00	0.19E+06 87.02	10.38 9.98 0.00	-2.13 -3.57 9.30	-5.83 -5.83 9.30	-0.04 -0.04 3.25	-0.04 -0.04 1.35	0.06 0.06 -1.27
4	1.15 12.03 0.00	0.19E+06 87.05	10.45 9.83 0.00	-1.44 -3.59 9.28	-6.98 -6.96 9.28	-0.03 -0.02 3.08	-0.05 -0.06 1.55	-0.06 -0.06 -1.01
5	1.27 18.11 0.00	0.20E+06 87.11	10.19 9.67 0.00	-0.46 -3.27 8.45	-6.53 -6.73 8.45	-0.03 -0.02 3.32	-0.06 -0.06 1.77	-0.04 -0.04 -1.05
6	1.38 21.98 0.00	0.21E+06 90.22	10.05 9.60 0.00	0.78 -3.05 7.78	-6.01 -6.01 7.78	-0.04 -0.02 3.55	-0.04 -0.05 2.18	-0.12 -0.12 -1.52

PROPULSIVE WING FORCE DATA

SUMMARY, RUN 307

PT	Q ALPHA BETA	REY NO HEIGHT	CL15 CDF10 CNUC	CD15 CAF10 CNUM	CPM15 CPM10 CMUT	CNM15 CNM10 CLTR	CYM15 CYM10 CDTR	CSF15 CSF10 CNTR
27	2.76		4.88	-1.22	-3.37	-0.01	-0.02	0.01
	0.01	0.20E+06	4.88	-1.22	-3.37	-0.01	-0.02	0.01
	0.00	80.36	0.00	3.87	3.87	1.93	0.85	-1.12
28	2.78		4.90	-0.88	-3.43	-0.01	-0.02	0.01
	4.02	0.20E+06	4.91	-1.24	-3.43	-0.01	-0.02	0.01
	0.00	80.45	0.00	3.95	3.95	2.10	0.78	-1.17
29	2.85		5.03	-0.95	-3.85	-0.01	-0.01	-0.07
	8.02	0.20E+06	5.50	-1.33	-3.85	-0.01	-0.01	-0.07
	0.00	80.81	0.00	4.14	4.14	2.40	1.00	-1.26
30	2.53		5.06	-0.19	-3.90	-0.01	-0.01	-0.06
	12.00	0.20E+06	5.80	-1.45	-3.90	-0.01	-0.01	-0.06
	0.00	87.82	0.00	4.33	4.33	2.85	1.20	-1.40
31	2.53		5.47	0.31	-3.90	-0.01	-0.02	-0.06
	16.01	0.20E+06	6.30	-1.48	-3.90	-0.01	-0.02	-0.06
	0.00	80.81	0.00	4.34	4.24	2.95	1.47	-1.40
32	2.85		6.54	1.03	-3.84	-0.01	-0.01	-0.06
	21.98	0.20E+06	6.45	-1.50	-3.84	-0.01	-0.01	-0.06
	0.00	90.32	0.00	4.18	4.18	3.00	1.78	-1.43

PROPULSIVE WING FORCE DATA

SUMMARY, RUN 308

PT	Q ALPHA BETA	REY NO HEIGHT	CL15 CDF10 CNUC	CD15 CAF10 CNUM	CPM15 CPM10 CMUT	CNM15 CNM10 CLTR	CYM15 CYM10 CDTR	CSF15 CSF10 CNTR
15	0.00		79.90	-54.48	-896.30	-16.77	-13.86	1.51
	-0.03	0.30E+06	79.92	-54.44	-896.30	-16.77	-13.87	1.51
	0.00	85.00	37.42	82.85	130.30	18.92	-13.02	-847.50
16	0.00		107.20	-73.94	-1216.00	-15.17	-15.11	1.48
	-0.01	0.30E+06	107.20	-73.92	-1216.00	-15.18	-15.11	1.48
	0.00	85.00	52.02	111.40	163.40	23.03	-18.00	-1150.00
17	0.00		141.30	-101.20	-1748.00	-81.97	5.12	-8.02
	-0.01	0.30E+06	141.30	-101.18	-1748.00	-81.97	5.13	-8.02
	0.00	85.00	71.83	150.20	221.00	33.34	-24.76	-1050.00

PROPULSIVE WING FORCE DATA

SUMMARY, RUN 300

PT	Q ALPHA BETA	REY NO HEIGHT	CL15 CAF16 CNUC	CD15 CAF16 CNUM	CPM15 CPM16 CMUT	CNM15 CNM16 CLTR	CYM15 CYM16 CDTR	CSF15 CSF16 CNTR
2	30.00 0.01 0.00	0.90E+06 85.36	0.51 0.51 0.00	0.16 0.16 0.00	-0.11 -0.11 0.00	0.00 0.00 0.50	0.00 0.00 0.20	0.01 0.01 -0.06
3	30.00 6.04 0.00	0.90E+06 87.71	0.72 0.73 0.00	0.21 0.15 0.00	-0.07 -0.07 0.00	0.00 0.00 0.70	0.00 0.00 0.25	0.01 0.01 -0.04
4	29.00 8.02 0.00	0.90E+06 87.82	0.94 0.97 0.00	0.20 0.15 0.00	-0.04 -0.04 0.00	0.00 0.00 0.83	0.00 0.00 0.33	0.01 0.01 -0.01
5	30.23 12.05 0.00	0.87E+06 88.00	1.10 1.25 0.00	0.30 0.14 0.00	-0.01 -0.01 0.00	0.00 0.00 1.17	0.00 0.40 0.44	0.00 0.00 0.02
6	29.00 16.00 0.00	0.90E+06 87.44	1.30 1.46 0.00	0.53 0.12 0.00	-0.01 -0.01 0.00	0.00 0.00 1.30	-0.01 0.00 0.57	0.01 0.01 0.02
7	30.00 22.02 0.00	0.90E+06 84.84	1.60 1.85 0.00	0.83 0.14 0.00	-0.06 -0.06 0.00	0.00 0.00 1.63	-0.01 0.00 0.87	0.01 0.01 -0.02

PROPULSIVE WING FORCE DATA

SUMMARY, RUN 370

PT	Q ALPHA BETA	REY NO HEIGHT	CL15 CAF16 CNUC	CD15 CAF16 CNUM	CPM15 CPM16 CMUT	CNM15 CNM16 CLTR	CYM15 CYM16 CDTR	CSF15 CSF16 CNTR
1	21.04 0.02 0.00	0.81E+06 88.23	1.51 1.51 0.21	0.00 0.00 0.44	-0.23 -0.23 0.00	-0.01 -0.01 1.60	0.00 0.00 0.38	0.00 0.00 -0.07
2	21.15 4.02 0.00	0.81E+06 83.00	1.73 1.74 0.21	0.23 0.11 0.43	-0.18 -0.18 0.04	0.01 0.01 1.20	0.00 0.00 0.40	0.00 0.00 -0.03
3	21.04 7.00 0.00	0.81E+06 88.82	2.11 2.19 0.22	0.42 0.12 0.45	-0.22 -0.22 0.07	0.04 0.04 1.63	0.00 0.00 0.60	-0.03 -0.03 -0.05
4	21.04 12.04 0.00	0.81E+06 86.07	2.75 2.85 0.22	0.73 0.10 0.46	-0.30 -0.30 0.00	0.02 0.02 2.25	0.00 0.00 0.90	-0.01 -0.01 -0.22
5	21.15 18.01 0.00	0.81E+06 87.22	3.00 3.27 0.22	1.10 0.21 0.46	-0.37 -0.37 0.06	0.01 0.01 2.57	0.00 0.00 1.27	0.00 0.00 -0.21
6	20.02 21.99 0.00	0.80E+06 83.04	3.40 3.73 0.22	1.55 0.18 0.47	-0.30 -0.30 0.00	0.01 0.01 2.80	-0.01 0.00 1.60	0.00 0.00 -0.13

PROPULSIVE WING FORCE DATA

SUMMARY. RUN 371

PT	Q ALPHA BETA	REY NO HEIGHT	CL15 CAF10 CNUC	CD15 CAF10 CNUU	CPM15 CPM10 CNUT	CBM15 CBM10 CLTR	CYM15 CYM10 CBTR	CSF15 CSF10 CNTR
1	10.58 0.00 0.00	0.57E+06 87.47	2.00 2.09 0.44	-0.16 -0.16 0.02	-0.42 -0.42 1.36	-0.01 -0.01 1.20	-0.02 -0.02 0.45	0.04 0.04 -0.00
2	10.46 4.03 0.00	0.57E+06 87.25	2.34 2.34 0.45	0.01 -0.15 0.04	-0.36 -0.36 1.36	0.00 0.00 1.40	-0.01 -0.01 0.57	0.04 0.04 -0.02
3	10.56 8.02 0.00	0.57E+06 87.12	2.00 2.70 0.44	0.20 -0.11 0.02	-0.34 -0.34 1.36	0.01 0.01 1.72	0.00 0.00 0.75	-0.03 -0.01 -0.01
4	10.46 12.02 0.00	0.57E+06 86.84	2.06 3.13 0.45	0.56 -0.00 0.04	-0.35 -0.35 1.36	0.03 0.03 2.07	0.00 0.00 0.96	-0.02 -0.02 -0.01
5	10.01 18.02 0.00	0.56E+06 86.76	2.55 3.80 0.43	0.90 -0.03 0.00	-0.46 -0.46 1.34	0.01 0.01 2.96	0.00 0.00 1.32	-0.02 -0.02 -0.13
6	10.00 22.00 0.00	0.56E+06 86.36	4.06 4.34 0.44	1.56 -0.06 0.01	-0.30 -0.30 1.35	0.01 0.01 3.00	0.00 0.01 1.81	-0.02 -0.02 -0.06

PROPULSIVE WING FORCE DATA

SUMMARY. RUN 372

PT	Q ALPHA BETA	REY NO HEIGHT	CL15 CAF10 CNUC	CD15 CAF10 CNUU	CPM15 CPM10 CNUT	CBM15 CBM10 CLTR	CYM15 CYM10 CBTR	CSF15 CSF10 CNTR
1	5.17 -0.01 0.00	0.40E+06 86.96	3.04 3.04 0.90	-0.73 -0.73 1.00	-0.75 -0.75 2.79	-0.02 -0.02 1.21	-0.00 -0.02 0.53	0.05 0.05 -0.07
2	5.20 4.00 0.00	0.40E+06 87.17	3.31 3.27 0.88	-0.47 -0.70 1.00	-0.00 -0.00 2.74	-0.03 -0.02 1.44	-0.02 -0.02 0.53	0.01 0.01 -0.02
3	5.20 8.00 0.00	0.40E+06 86.13	3.70 3.64 0.88	-0.15 -0.07 1.00	-0.00 -0.00 2.74	-0.00 -0.00 1.75	-0.00 -0.00 0.02	0.05 0.05 -0.01
4	5.00 12.03 0.00	0.41E+06 86.84	4.00 4.05 0.86	0.27 -0.56 1.02	-0.00 -0.00 2.00	-0.00 -0.04 2.11	-0.04 -0.05 1.00	0.03 0.03 -0.02
5	5.17 18.05 0.00	0.40E+06 86.07	4.52 4.53 0.90	0.00 -0.02 1.00	-0.07 -0.07 2.00	-0.01 -0.01 2.42	-0.03 -0.03 1.30	-0.00 -0.00 0.00
6	5.00 21.07 0.00	0.40E+06 87.05	5.01 5.15 0.92	1.26 -0.02 1.04	-0.05 -0.05 2.07	0.01 0.02 2.76	-0.03 -0.02 1.00	-0.10 -0.10 0.15

ORIGINAL PAGE IS
OF POOR QUALITY

PROPULSIVE WING FORCE DATA

SUMMARY, RUN 373

PT	Q ALPHA BETA	REY NO HEIGHT	CL15 CSF10 CNUC	CD15 CAF10 CNUN	CPM15 CPM10 CMUT	CBM15 CBM10 CLTR	CYM15 CYM10 CDTR	CSF15 CSF10 CNTR
1	2.08		5.11	-1.81	-1.57	-0.04	-0.02	0.12
	0.03	0.20E+06	5.11	-1.81	-1.57	-0.04	-0.02	0.12
	0.00	87.22	1.77	3.73	5.50	1.51	0.07	-0.22
2	2.05		5.10	-1.40	-1.28	-0.04	0.01	0.06
	4.00	0.20E+06	5.07	-1.85	-1.28	-0.04	0.00	0.05
	0.00	88.07	1.76	3.72	5.46	1.44	0.72	0.05
3	2.53		5.72	-1.10	-1.29	-0.02	-0.02	0.03
	8.00	0.20E+06	5.51	-1.95	-1.29	-0.02	-0.02	0.03
	0.00	88.18	1.86	3.90	5.75	1.84	0.08	0.12
4	2.05		5.00	-0.58	-1.20	-0.06	0.00	0.05
	11.08	0.20E+06	5.73	-1.81	-1.25	-0.06	-0.02	0.05
	0.00	88.14	1.77	3.73	5.50	1.94	1.10	0.08
5	2.05		6.53	0.00	-1.31	-0.07	0.01	-0.05
	16.03	0.20E+06	6.30	-1.73	-1.31	-0.07	-0.01	-0.05
	0.00	87.01	1.77	3.73	5.51	2.38	1.47	0.04
6	2.75		8.06	1.05	-1.10	-0.01	-0.01	-0.03
	21.00	0.20E+06	8.75	-1.60	-1.10	0.00	-0.01	-0.03
	0.00	88.54	1.76	3.58	5.28	2.75	1.06	0.11

PROPULSIVE WING FORCE DATA

SUMMARY, RUN 374

PT	Q ALPHA BETA	REY NO HEIGHT	CL15 CSF10 CNUC	CD15 CAF10 CNUN	CPM15 CPM10 CMUT	CBM15 CBM10 CLTR	CYM15 CYM10 CDTR	CSF15 CSF10 CNTR
1	1.15		8.81	-4.06	-3.25	-0.02	-0.03	0.03
	-0.01	0.10E+06	8.81	-4.06	-3.29	-0.02	-0.03	0.03
	0.00	87.06	4.00	8.50	12.08	1.51	0.74	-0.10
2	1.30		8.04	-3.42	-2.05	-0.03	-0.04	0.12
	3.08	0.21E+06	8.50	-4.03	-2.05	-0.03	-0.04	0.12
	0.00	87.30	3.41	7.17	10.50	1.61	0.08	-0.06
3	1.27		8.90	-3.11	-2.08	-0.05	-0.02	0.02
	7.00	0.20E+06	9.27	-4.05	-2.08	-0.05	-0.02	0.02
	0.00	87.00	3.70	7.00	11.50	1.72	0.08	0.14
4	1.27		10.17	-2.42	-2.47	-0.07	0.00	-0.10
	12.05	0.20E+06	9.44	-4.45	-2.47	-0.07	-0.01	-0.10
	0.00	87.75	3.71	7.00	11.51	1.72	1.06	0.35
5	1.40		9.23	-1.20	-2.11	-0.08	0.01	-0.08
	16.04	0.21E+06	8.54	-3.70	-2.11	-0.08	-0.01	-0.08
	0.00	85.77	3.13	6.58	9.72	1.90	1.25	0.28
6	1.27		11.26	-0.10	-2.46	-0.10	0.00	-0.06
	22.07	0.20E+06	10.49	-4.26	-2.46	-0.09	-0.04	-0.06
	0.00	90.07	3.71	7.04	11.95	2.42	1.60	0.35

PROPULSIVE WING FORCE DATA

SUMMARY, RUN 375

PT	Q ALPHA DELTA	REY NO HEIGHT	CL15 CAF10 CNBC	CD15 CAF10 CNBN	CPR15 CPR10 CNBT	CBR15 CBR10 CLTB	CYR15 CYR10 CDTB	CSF15 CSF10 CNTB
2	20.05 -0.03 0.00	0.00E+00 10.75	0.57 0.57 0.00	0.15 0.15 0.00	-0.11 -0.11 0.00	0.00 0.00 0.53	0.00 0.00 0.18	0.00 0.00 -0.06
3	30.10 -0.07 0.00	0.00E+00 22.02	0.52 0.52 0.00	0.15 0.15 0.00	-0.11 -0.11 0.00	0.00 0.00 0.46	0.00 0.00 0.19	0.00 0.00 -0.07
4	25.07 -0.03 0.00	0.00E+00 00.76	0.50 0.50 0.00	0.15 0.15 0.00	-0.10 -0.10 0.00	0.00 0.00 0.46	0.00 0.00 0.19	0.00 0.00 -0.07
5	30.10 0.03 0.00	0.00E+00 07.22	0.40 0.40 0.00	0.15 0.15 0.00	-0.11 -0.11 0.00	0.00 0.00 0.46	0.00 0.00 0.19	0.00 0.00 -0.07

PROPULSIVE WING FORCE DATA

SUMMARY, RUN 376

PT	Q ALPHA DELTA	REY NO HEIGHT	CL15 CAF10 CNBC	CD15 CAF10 CNBN	CPR15 CPR10 CNBT	CBR15 CBR10 CLTB	CYR15 CYR10 CDTB	CSF15 CSF10 CNTB
1	20.05 0.02 0.00	0.00E+00 10.22	0.50 0.50 0.00	0.15 0.15 0.00	-0.12 -0.12 0.00	0.00 0.00 0.52	0.00 0.00 0.20	0.00 0.00 -0.07
2	21.07 0.00 0.00	0.00E+00 22.22	0.53 0.53 0.00	0.15 0.15 0.00	-0.11 -0.11 0.00	0.00 0.00 0.47	0.00 0.00 0.20	0.00 0.00 -0.06
3	20.00 -0.03 0.00	0.00E+00 00.03	0.50 0.50 0.00	0.15 0.15 0.00	-0.11 -0.11 0.00	0.00 0.00 0.44	0.00 0.00 0.20	0.00 0.00 -0.06
4	20.00 -0.02 0.00	0.00E+00 06.07	0.00 0.00 0.00	0.15 0.15 0.00	-0.11 -0.11 0.00	0.00 0.00 0.43	0.00 0.00 0.20	0.00 0.00 -0.06

PROPULSIVE WING FORCE DATA

SUMMARY, RUN 377

PT	Q ALPHA BETA	REY NO HEIGHT	CL15 CSF10 CRUC	CD15 CAF10 CRUW	CPR15 CPR10 CRUT	CBR15 CBR10 CLTR	CYR15 CYR10 CDTR	CSF15 CSF10 CRTR
1	10.50		0.57	0.14	-0.11	0.00	0.00	0.00
	-0.03	0.57E+06	0.57	0.14	-0.11	0.00	0.00	0.00
	0.00	10.20	0.00	0.00	0.00	0.45	0.25	-0.02
2	10.48		0.51	0.15	-0.10	0.00	0.00	0.00
	0.02	0.56E+06	0.51	0.15	-0.10	0.00	0.00	0.00
	0.00	32.77	0.00	0.00	0.00	0.20	0.25	0.00
3	10.48		0.40	0.15	-0.11	0.00	0.00	0.01
	0.00	0.56E+06	0.40	0.15	-0.11	0.00	0.00	0.01
	0.00	85.50	0.00	0.00	0.00	0.37	0.25	-0.01
4	10.50		0.46	0.14	-0.11	0.00	0.00	-0.01
	-0.02	0.57E+06	0.46	0.14	-0.11	0.00	0.00	-0.01
	0.00	87.20	0.00	0.00	0.00	0.34	0.25	-0.01

PROPULSIVE WING FORCE DATA

SUMMARY, RUN 378

PT	Q ALPHA BETA	REY NO HEIGHT	CL15 CSF10 CRUC	CD15 CAF10 CRUW	CPR15 CPR10 CRUT	CBR15 CBR10 CLTR	CYR15 CYR10 CDTR	CSF15 CSF10 CRTR
1	5.10		0.54	0.14	-0.10	0.00	0.00	0.00
	0.00	0.40E+06	0.54	0.14	-0.10	0.00	0.00	0.00
	0.00	10.51	0.00	0.00	0.00	0.30	0.30	0.00
2	5.30		0.47	0.14	-0.08	0.00	0.00	-0.01
	-0.02	0.40E+06	0.47	0.14	-0.08	0.00	0.00	-0.01
	0.00	32.52	0.00	0.00	0.00	0.23	0.30	0.10
3	5.30		0.42	0.13	-0.11	0.00	0.00	0.00
	-0.02	0.40E+06	0.42	0.13	-0.11	0.00	0.00	0.00
	0.00	85.71	0.00	0.00	0.01	0.18	0.35	0.00
4	5.30		0.42	0.13	-0.10	0.00	0.00	-0.03
	0.02	0.40E+06	0.42	0.13	-0.10	0.00	0.00	-0.03
	0.00	87.40	0.00	0.00	0.00	0.18	0.34	0.00

PROPULSIVE WING FORCE DATA

SUMMARY, RUN 370

PT	Q ALPHA BETA	REY NO HEIGHT	CL1S CNF1B CNUC	CD1S CAF1B CNUW	CPM1S CPM1B CNUT	CBM1S CBM1B CL1B	CYM1S CYM1B CD1B	CSF1S CSF1B CN1B
2	2.70		5.00	-1.95	-1.41	-0.02	0.00	-0.03
	0.01	0.20E+06	5.00	-1.95	-1.41	-0.02	0.00	-0.03
	0.00	10.27	1.77	3.06	9.43	1.52	0.44	-0.11
3	2.50		5.03	-1.94	-1.53	-0.02	-0.01	0.04
	-0.02	0.20E+06	5.03	-1.94	-1.53	-0.02	-0.01	0.04
	0.00	32.73	1.83	3.02	9.06	1.30	0.57	-0.10
4	2.70		4.93	-1.90	-1.46	-0.03	-0.01	0.05
	0.01	0.20E+06	4.93	-1.90	-1.46	-0.03	-0.01	0.05
	0.00	65.06	1.75	3.07	9.42	1.41	0.62	-0.17
5	2.70		4.90	-1.95	-1.44	-0.03	0.00	0.04
	-0.01	0.20E+06	4.90	-1.95	-1.44	-0.03	0.00	0.04
	0.00	86.96	1.61	3.43	9.04	1.21	0.00	-0.22

PROPULSIVE WING FORCE DATA

SUMMARY, RUN 300

PT	Q ALPHA BETA	REY NO HEIGHT	CL1S CNF1B CNUC	CD1S CAF1B CNUW	CPM1S CYM1B CNUT	CBM1S CBM1B CL1B	CYM1S CYM1B CD1B	CSF1S CSF1B CN1B
1	1.47		8.00	-3.78	-3.26	-0.05	0.14	0.34
	-0.01	0.21E+06	8.00	-3.78	-3.26	-0.05	0.14	0.34
	0.00	10.43	3.15	6.00	0.04	2.46	0.04	-0.06
2	1.47		7.00	-3.94	-2.61	-0.03	-0.01	0.10
	0.00	0.21E+06	7.00	-3.94	-2.61	-0.03	-0.01	0.10
	0.00	32.73	3.13	6.70	0.04	1.24	0.50	-0.20
3	1.47		7.53	-3.00	-2.53	0.00	0.03	-0.01
	-0.03	0.21E+06	7.53	-3.00	-2.53	0.00	0.03	-0.01
	0.00	66.76	3.14	6.72	0.96	1.05	0.57	-0.20
4	1.47		7.00	-3.00	-2.50	-0.02	0.02	-0.03
	-0.01	0.21E+06	7.00	-3.00	-2.50	-0.02	0.02	-0.03
	0.00	87.10	3.14	6.74	0.00	1.11	0.50	-0.15

PROPULSIVE WING FORCE DATA

SUMMARY, RUN 301

PT	Q ALPHA BETA	RET NO HEIGHT	CL15 CAF10 CNUC	CD15 CAF10 CNUA	CPM15 CPM10 CMUT	CBM15 CBM10 CLTR	CYM15 CYM10 CNTR	CS/15 CS/10 CNTR
1	5.30		3.15	-0.05	-0.79	0.00	0.00	-0.00
	-0.01	0.40E+06	3.15	-0.05	-0.79	0.00	0.00	-0.00
	0.00	10.01	0.07	1.00	2.75	1.34	0.30	-0.11
2	5.30		2.00	-0.78	-0.63	-0.01	-0.01	0.01
	0.03	0.40E+06	2.07	-0.78	-0.63	-0.01	-0.01	0.01
	0.04	22.00	0.04	1.02	2.00	1.11	0.40	0.03
3	5.30		2.00	-0.71	-0.00	-0.04	0.00	0.00
	0.00	0.40E+06	2.00	-0.71	-0.00	-0.04	0.00	0.00
	0.00	05.57	0.00	1.04	2.70	1.31	0.51	-0.02
4	5.30		2.03	-0.73	-0.76	-0.01	0.00	0.01
	0.03	0.40E+06	2.03	-0.73	-0.76	-0.01	0.00	0.01
	0.00	07.10	0.00	1.00	2.72	1.00	0.50	-0.00

PROPULSIVE WING FORCE DATA

SUMMARY, RUN 302

PT	Q ALPHA BETA	RET NO HEIGHT	CL15 CAF10 CNUC	CD15 CAF10 CNUA	CPM15 CPM10 CMUT	CBM15 CBM10 CLTR	CYM15 CYM10 CNTR	CS/15 CS/10 CNTR
1	10.50		2.15	-0.25	-0.40	0.00	0.00	-0.01
	0.01	0.50E+06	2.15	-0.25	-0.40	0.00	0.00	-0.01
	0.00	10.53	0.43	0.03	1.30	1.25	0.30	-0.07
2	10.50		2.00	-0.10	-0.40	0.00	-0.01	0.01
	-0.01	0.50E+06	2.00	-0.10	-0.40	0.02	-0.01	0.01
	0.00	32.00	0.42	0.03	1.27	1.20	0.43	-0.06
3	10.40		2.04	-0.17	-0.40	-0.01	0.00	0.01
	-0.01	0.50E+06	2.04	-0.17	-0.40	-0.01	0.00	0.01
	0.06	05.07	0.44	0.04	1.26	1.13	0.45	-0.07
4	10.40		2.03	-0.17	-0.42	0.00	-0.01	0.03
	-0.03	0.50E+06	2.03	-0.17	-0.42	0.00	-0.01	0.03
	0.00	07.00	0.44	0.05	1.20	1.12	0.45	-0.00

PROPULSIVE WING FORCE DATA

SUMMARY, RUN 303

PT	Q ALPHA BETA	MET NO HEIGHT	CL15 CNF10 CNUC	CD15 CAF10 CNBM	CPR15 CPR10 CNUT	CBR15 CBR10 CLTB	CYR15 CYR10 CDTB	CSF15 CSF10 CNTB
1	21.07		1.50	0.03	-0.22	0.00	0.01	0.00
	0.02	0.70E+00	1.50	0.03	-0.22	0.00	0.01	0.00
	0.00	17.50	0.21	0.46	0.07	1.15	0.34	-0.05
2	20.04		1.52	0.06	-0.22	0.01	0.00	0.00
	-0.00	0.70E+00	1.52	0.07	-0.22	0.01	0.00	0.00
	0.00	22.00	0.22	0.47	0.08	1.07	0.37	-0.06
3	20.00		1.47	0.00	-0.25	0.00	0.00	-0.01
	0.01	0.70E+00	1.47	0.00	-0.25	0.00	0.00	-0.01
	0.00	0.14	0.22	0.47	0.00	1.02	0.38	-0.00
4	20.06		0.57	-1220.00	-0.26	-0.01	0.00	0.00
	-0.04	0.70E+00	1.49	-1220.00	-0.26	-0.01	0.00	0.00
	0.00	22.55	0.22	0.47	0.00	0.12	-1220.00	-0.00

PROPULSIVE WING FORCE DATA

SUMMARY, RUN 305

PT	Q ALPHA BETA	MET NO HEIGHT	CL15 CNF10 CNUC	CD15 CAF10 CNBM	CPR15 CPR10 CNUT	CBR15 CBR10 CLTB	CYR15 CYR10 CDTB	CSF15 CSF10 CNTB
2	0.00		10.07	-15.50	-66.15	100.00	174.00	-0.30
	0.04	0.30E+00	10.06	-15.00	-65.15	100.70	175.10	-0.30
	0.00	60.04	0.37	41.34	47.71	3.04	-1.40	-60.42
3	0.00		40.00	-26.26	-200.00	300.00	300.10	1.36
	0.06	0.30E+00	20.07	-26.31	-200.00	300.70	300.40	1.36
	0.00	60.04	20.22	46.77	61.00	-1.22	2.75	-102.90
4	0.00		54.22	-36.04	-227.00	525.10	300.70	2.00
	0.00	0.30E+00	54.20	-36.73	-227.00	524.50	300.50	2.00
	0.00	60.04	35.00	54.17	90.10	-11.31	5.61	-203.30
5	0.00		72.10	-51.70	-310.00	604.70	561.00	0.17
	0.12	0.30E+00	72.00	-51.03	-310.00	-603.50	562.00	0.17
	0.00	60.04	60.00	68.06	110.70	-10.31	6.53	-270.40
6	0.00		94.04	-67.04	-471.00	917.30	800.30	0.70
	0.14	0.30E+00	93.07	-67.27	-471.00	915.50	701.00	0.70
	0.00	60.04	60.63	67.56	156.30	-20.06	10.00	-420.00

ORIGINAL PAGE IS
OF POOR QUALITY

PROPULSIVE WING FORCE DATA

SUMMARY, RUN 366

PT	Q ALPHA BETA	REY NO HEIGHT	CL15 CAF16 CNWC	CD15 CAF16 CNWA	CPM15 CPM16 CNWT	CBM15 CBM16 CLTR	CYM15 CYM16 CDTR	CS/15 CS/16 CNTR
2	0.00		72.14	-47.83	-328.30	847.50	496.70	2.00
	0.11	0.30E+06	72.05	-47.06	-328.30	846.50	497.00	2.08
	0.00	60.94	44.51	87.34	111.80	-11.13	8.05	-298.30
3	0.00		92.83	-84.79	-417.00	889.50	871.50	1.31
	0.14	0.30E+06	92.87	-85.02	-417.50	887.90	873.60	1.31
	0.00	60.94	63.45	87.26	150.70	-10.40	11.52	-378.30
4	0.00		97.83	-95.83	-481.70	880.00	702.00	0.25
	0.14	0.30E+06	97.87	-66.06	-481.70	887.00	704.20	0.25
	0.00	60.94	64.40	80.06	153.00	17.13	12.52	-440.30
5	0.00		97.41	-88.10	-451.00	905.40	885.20	0.87
	0.13	0.30E+06	97.24	-66.24	-451.00	903.00	887.50	0.87
	0.00	60.94	65.66	90.55	150.50	-10.40	12.02	-400.10

PROPULSIVE WING FORCE DATA

SUMMARY, RUN 367

PT	Q ALPHA BETA	REY NO HEIGHT	CL15 CAF16 CNWC	CD15 CAF16 CNWA	CPM15 CPM16 CNWT	CBM15 CBM16 CLTR	CYM15 CYM16 CDTR	CS/15 CS/16 CNTR
2	20.01		1.02	-930.40	-0.05	0.10	3.06	-0.13
	-0.01	0.78E+06	1.11	-930.40	-0.05	0.10	0.06	-0.13
	0.00	87.46	0.25	0.35	0.00	0.04	-930.20	0.02
3	20.01		90.71	-1300.00	-0.07	0.10	0.06	-0.14
	4.04	0.78E+06	1.05	-1304.00	-0.07	0.10	0.06	-0.14
	0.00	87.42	0.25	0.35	0.00	90.31	-1300.00	-0.01
4	20.00		2.06	0.57	-0.03	0.10	0.03	-0.11
	12.05	0.78E+06	2.14	0.12	-0.03	0.10	0.07	-0.11
	0.00	87.58	0.25	0.35	0.00	1.04	0.73	0.04

PROPULSIVE WING FORCE DATA

SUMMARY, RUN 366

PT	Q ALPHA BETA	REY NO HEIGHT	CL1S CNF1B CNWC	CD1S CAF1B CNWW	CPM1S CPM1B CNWT	CBM1S CBM1B CLTR	CYM1S CYM1B CDTR	CSF1S CSF1B CNTR
1	10.00		1.47	-302.30	0.03	0.10	0.06	-0.04
	0.01	0.50E+06	1.41	-302.30	0.03	0.10	0.06	-0.04
	0.00	27.04	0.48	0.07	1.16	0.73	-301.60	0.15
2	10.00		25.02	-343.40	0.16	0.17	0.06	0.01
	4.06	0.50E+06	1.56	-344.40	0.15	0.17	0.07	0.01
	0.00	86.72	0.48	0.08	1.17	25.15	-343.00	0.27
3	10.00		2.31	0.43	0.12	0.25	0.04	-0.08
	12.10	0.50E+06	2.35	-0.07	0.12	0.23	0.10	-0.06
	0.00	87.02	0.49	0.07	1.16	1.46	0.75	0.24

PROPULSIVE WING FORCE DATA

SUMMARY, RUN 300

PT	Q ALPHA BETA	REY NO HEIGHT	CL1S CNF1B CNWC	CD1S CAF1B CNWW	CPM1S CPM1B CNWT	CBM1S CBM1B CLTR	CYM1S CYM1B CDTR	CSF1S CSF1B CNTR
1	5.40		2.23	-6.07	-0.13	0.22	0.17	0.00
	0.02	0.40E+06	2.22	-6.07	-0.13	0.22	0.17	0.00
	0.00	86.95	0.87	1.33	2.30	0.75	-0.11	0.11
2	5.40		2.04	-7.05	0.02	0.22	0.15	-0.01
	4.02	0.40E+06	2.30	-7.83	0.02	0.22	0.17	-0.01
	0.00	87.63	0.88	1.34	2.31	1.30	-0.79	0.20
3	5.17		2.04	0.00	0.15	0.22	0.12	-0.04
	12.04	0.31E+06	2.07	-0.01	0.15	0.20	0.10	-0.04
	0.00	88.05	1.02	1.30	2.41	1.21	0.07	0.40

PROPULSIVE WING FORCE DATA

SUMMARY, RUN 390

PT	Q ALPHA BETA	REY NO HEIGHT	CLIS CNFIB CNUC	CDIS CAFIB CNUW	CPMIS CPMIB CNUT	CRMIS CRMIB CLTR	CYMIS CYMIB CDTR	CSFIS CSFIB CNTR
14	0.00		16.55	-11.48	339.90	15.18	16.39	0.64
	0.08	0.30E+08	16.54	-11.51	339.90	15.16	16.41	0.64
	0.00	87.36	24.88	0.00	24.88	-52.55	-7.41	347.10
15	0.00		23.82	-17.48	504.60	18.38	27.78	-0.58
	0.12	0.30E+08	23.78	-17.51	504.60	18.33	27.82	-0.58
	0.00	87.36	40.15	0.00	40.15	-47.84	28.17	515.80
16	0.00		31.72	-23.25	684.40	18.24	30.80	-1.04
	0.16	0.30E+08	31.65	-23.34	684.40	18.15	30.74	-1.04
	0.00	87.36	54.11	0.09	54.11	-58.03	41.08	709.70
17	0.00		40.81	-28.40	855.80	-0.70	13.62	0.33
	0.20	0.30E+08	40.51	-28.54	855.80	-0.75	13.82	0.33
	0.00	87.36	68.11	0.00	68.11	-80.62	22.04	875.40
18	0.00		42.41	-28.47	877.20	12.31	20.68	0.15
	0.20	0.30E+08	42.30	-28.62	877.20	12.24	20.71	0.15
	0.00	87.36	76.02	0.00	76.02	-110.00	22.57	898.50

PROPULSIVE WING FORCE DATA

SUMMARY, RUN 39'

PT	Q ALPHA BETA	REY NO HEIGHT	CLIS CNFIB CNUC	CDIS CAFIB CNUW	CPMIS CPMIB CNUT	CRMIS CRMIB CLTR	CYMIS CYMIB CDTR	CSFIS CSFIB CNTR
3	20.92		0.42	-758.90	0.14	0.00	0.00	0.01
	0.02	0.80E+06	0.17	-758.90	0.14	0.00	0.00	0.01
	0.00	87.05	0.00	0.00	0.00	0.41	-758.90	0.16
	21.04		0.50	-783.90	0.14	0.00	0.00	0.01
	0.03	0.81E+06	0.17	-753.90	0.14	0.00	0.00	0.01
	0.00	84.07	0.00	0.00	0.00	0.48	-783.90	0.16
5	21.04		0.53	-742.20	0.14	0.00	0.00	0.01
	0.03	0.81E+06	0.18	-742.20	0.14	0.00	0.00	0.01
	0.00	81.08	0.00	0.00	0.00	0.52	-742.20	0.16
6	21.04		0.56	-898.90	0.15	0.00	0.00	0.01
	0.03	0.81E+06	0.17	-898.90	0.15	0.00	0.00	0.01
	0.00	78.09	0.00	0.00	0.00	0.55	-898.90	0.16
7	21.04		0.64	-755.00	0.14	0.00	-0.01	0.01
	0.04	0.81E+06	0.17	-755.00	0.14	0.00	-0.01	0.01
	0.00	75.08	0.00	0.00	0.00	0.63	-755.00	0.16
9	21.04		0.18	0.05	0.16	0.00	-0.01	0.00
	0.01	0.80E+06	0.18	0.05	0.16	0.00	-0.01	0.00
	0.00	18.66	0.00	0.00	0.00	0.17	0.05	0.17
10	21.15		0.17	0.05	0.14	0.00	-0.01	0.01
	0.02	0.80E+06	0.17	0.05	0.14	0.00	-0.01	0.01
	0.00	57.07	0.00	0.00	0.00	0.18	0.05	0.16
11	21.15		0.16	0.05	0.15	0.00	-0.01	0.01
	0.02	0.80E+06	0.16	0.05	0.15	0.00	-0.01	0.01
	0.00	59.98	0.00	0.00	0.00	0.15	0.05	0.16
12	21.15		0.16	0.05	0.15	0.00	-0.01	0.01
	0.02	0.80E+06	0.16	0.05	0.15	0.00	-0.01	0.01
	0.00	62.96	0.00	0.00	0.00	0.15	0.05	0.16
13	21.15		0.16	0.05	0.15	0.00	-0.01	0.01
	0.02	0.80E+06	0.16	0.05	0.15	0.00	-0.01	0.01
	0.00	66.00	0.00	0.00	0.00	0.15	0.05	0.16
14	21.15		0.17	0.05	0.14	0.00	-0.01	0.01
	0.02	0.80E+06	0.17	0.05	0.14	0.00	-0.01	0.01
	0.00	69.00	0.00	0.00	0.00	0.18	0.05	0.16
15	21.15		0.16	0.05	0.14	0.00	-0.01	0.00
	0.01	0.80E+06	0.18	0.05	0.14	0.00	-0.01	0.00
	0.00	71.98	0.00	0.00	0.00	0.15	0.05	0.16
16	21.15		0.17	0.05	0.15	0.00	-0.01	0.01
	0.02	0.80E+06	0.17	0.05	0.15	0.00	-0.01	0.01
	0.00	75.04	0.00	0.00	0.00	0.18	0.05	0.16
17	21.04		0.17	0.05	0.14	0.00	-0.01	0.01
	0.01	0.80E+06	0.17	0.05	0.14	0.00	-0.01	0.01
	0.00	78.02	0.00	0.00	0.00	0.18	0.05	0.16
18	21.04		0.18	0.05	0.15	0.00	-0.01	0.01
	0.00	0.80E+06	0.18	0.05	0.15	0.00	-0.01	0.01
	0.00	81.01	0.00	0.00	0.00	0.15	0.05	0.16
19	21.04		0.18	0.05	0.14	0.00	-0.01	0.01
	0.00	0.80E+06	0.18	0.05	0.14	0.00	-0.01	0.01
	0.00	83.99	0.00	0.00	0.00	0.15	0.05	0.16
20	21.15		0.17	0.05	0.14	0.00	-0.01	0.00
	0.00	0.80E+06	0.17	0.05	0.14	0.00	-0.01	0.00
	0.00	86.98	0.00	0.00	0.00	0.18	0.05	0.15

PROPULSIVE WING FORCE DATA

SUMMARY, RUN 392

PT	Q ALPHA BETA	REY NO HEIGHT	CL1S CNF1B CNUC	CD1S CAF1B CNUM	CPN1S CPN1B CNUT	CRN1S CRN1B CLTR	CYN1S CYN1B CDTR	CSF1S CSF1B CNTR
1	10.00		0.77	-0.03	0.68	0.00	-0.01	0.02
	-0.01	0.57E+06	0.77	-0.03	0.68	0.00	-0.01	0.02
	0.00	88.98	0.48	0.00	0.48	0.50	0.17	0.51
2	10.48		0.81	-0.03	0.69	0.00	-0.01	0.00
	-0.02	0.58E+06	0.81	-0.03	0.69	0.00	-0.01	0.00
	0.00	58.09	0.51	0.00	0.51	0.53	0.17	0.51
3	10.58		0.78	-0.03	0.69	0.00	-0.02	0.01
	-0.01	0.57E+06	0.78	-0.03	0.69	0.00	-0.02	0.01
	0.00	59.98	0.50	0.00	0.50	0.51	0.17	0.50
4	10.48		0.80	-0.03	0.69	0.00	-0.02	0.02
	-0.01	0.58E+06	0.80	-0.03	0.69	0.00	-0.02	0.02
	0.00	63.05	0.50	0.00	0.50	0.52	0.18	0.51
5	10.48		0.81	-0.03	0.69	0.00	-0.02	0.01
	-0.01	0.58E+06	0.81	-0.03	0.69	0.00	-0.02	0.01
	0.00	66.07	0.51	0.00	0.51	0.53	0.18	0.51
6	10.48		0.80	-0.03	0.69	0.00	-0.01	-0.01
	-0.01	0.58E+06	0.80	-0.03	0.69	0.00	-0.01	-0.01
	0.00	69.10	0.50	0.00	0.50	0.52	0.18	0.51
7	10.48		0.80	-0.03	0.70	0.00	-0.02	0.00
	-0.02	0.58E+06	0.80	-0.03	0.70	0.00	-0.02	0.00
	0.00	71.97	0.51	0.00	0.51	0.51	0.18	0.51
8	10.58		0.79	-0.03	0.69	0.00	-0.01	-0.01
	-0.01	0.57E+06	0.79	-0.03	0.69	0.00	-0.01	-0.01
	0.00	74.93	0.51	0.00	0.51	0.51	0.18	0.51
9	10.58		0.78	-0.03	0.69	0.00	-0.01	0.00
	-0.02	0.57E+06	0.78	-0.02	0.69	0.00	-0.01	0.00
	0.00	77.93	0.51	0.00	0.51	0.50	0.18	0.50
10	10.58		0.78	-0.02	0.68	-0.01	-0.01	0.01
	-0.02	0.57E+06	0.78	-0.02	0.68	-0.01	-0.01	0.01
	0.00	80.99	0.48	0.00	0.48	0.51	0.18	0.51
11	10.48		0.80	-0.03	0.69	-0.01	-0.01	0.02
	-0.01	0.58E+06	0.80	-0.03	0.69	-0.01	-0.01	0.02
	0.00	83.98	0.49	0.00	0.49	0.53	0.18	0.51
12	10.48		0.80	-0.03	0.69	-0.01	-0.01	0.02
	-0.01	0.58E+06	0.80	-0.03	0.69	-0.01	-0.01	0.02
	0.00	87.05	0.49	0.00	0.49	0.52	0.17	0.51

PROPULSIVE WING FORCE DATA

SUMMARY, RUN 393

PT	Q ALPHA BETA	REY NO HEIGHT	CL1S CNF1B CNUC	CD1S CAF1B CNUM	CPN1S CPN1B CNUT	CRN1S CRN1B CLTR	CYN1S CYN1B CDTR	CSF1S CSF1B CNTR
1	5.29		1.24	-909.50	0.92	-0.01	-0.03	0.04
	0.01	0.40E+06	1.12	-909.50	0.92	-0.01	-0.03	0.04
	0.00	57.12	0.96	0.00	0.96	0.69	-909.10	0.56
2	5.29		1.19	-1080.00	0.92	-0.01	-0.02	0.04
	0.00	0.40E+06	1.12	-1080.00	0.92	-0.01	-0.02	0.04
	0.00	59.91	0.97	0.00	0.97	0.65	-1080.00	0.56
3	5.17		1.20	-1180.00	0.94	-0.01	-0.02	0.04
	0.00	0.40E+06	1.17	-1180.00	0.94	-0.01	-0.02	0.04
	0.00	62.99	0.99	0.00	0.99	0.65	-1179.00	0.57
4	5.17		1.16	-1318.00	0.93	-0.01	-0.03	0.03
	0.00	0.40E+06	1.16	-1318.00	0.93	-0.01	-0.03	0.03
	0.00	66.12	0.98	0.00	0.98	0.60	-1317.00	0.57
5	5.17		1.13	-1432.00	0.94	-0.01	-0.03	0.02
	0.00	0.40E+06	1.17	-1432.00	0.94	-0.01	-0.03	0.02
	0.00	69.09	1.00	0.00	1.00	0.58	-1432.00	0.57
6	5.29		[illegible]	-1616.00	0.93	-0.01	-0.02	0.02
	-0.01	0.40E+06	[illegible]	-1616.00	0.93	-0.01	-0.02	0.02
	0.00	72.06	0.98	0.00	0.98	0.43	-1615.00	0.57
7	5.29		0.94	-1837.00	0.93	-0.01	-0.03	0.02
	-0.01	0.40E+06	1.14	-1837.00	0.93	-0.01	-0.03	0.02
	0.00	75.00	0.97	0.00	0.97	0.40	-1837.00	0.57
8	5.29		0.93	-1848.00	0.92	-0.01	-0.02	0.04
	-0.01	0.40E+06	1.14	-1848.00	0.92	-0.01	-0.02	0.04
	0.00	77.92	0.97	0.00	0.97	0.29	-1848.00	0.57
9	5.17		1.18	-1608.00	0.94	-0.01	-0.02	0.04
	0.00	0.40E+06	1.17	-1608.00	0.94	-0.01	-0.02	0.04
	0.00	81.02	1.00	0.00	1.00	0.60	-1608.00	0.58
10	5.17		1.25	-1542.00	0.94	-0.01	-0.03	0.05
	0.00	0.40E+06	1.18	-1542.00	0.94	-0.01	-0.03	0.05
	0.00	83.97	0.99	0.00	0.99	0.70	-1541.00	0.58
11	5.17		1.10	-1497.00	0.94	-0.01	-0.02	0.04
	0.00	0.40E+06	1.15	-1497.00	0.94	-0.01	-0.02	0.04
	0.00	86.95	0.99	0.00	0.99	0.55	-1496.00	0.58

PROPULSIVE WING FORCE DATA

SUMMARY, RUN 384

PT	Q ALPHA BETA	REY NO HEIGHT	CL1S CNF1B CNWC	CD1S CAF1B CNWW	CPM1S CPM1B CNWT	CNN1S CNN1B CLTR	CYN1S CYN1B CDTR	CSF1S CSF1B CNTR
2	20.81		0.17	0.05	0.14	0.00	-0.01	0.01
	0.00	0.79E+06	0.17	0.05	0.14	0.00	-0.01	0.01
	0.00	58.78	0.00	0.00	0.00	0.16	0.05	0.15
3	21.04		0.17	0.05	0.15	0.00	-0.01	0.01
	0.00	0.79E+06	0.17	0.05	0.15	0.00	-0.01	0.01
	0.00	59.97	0.00	0.00	0.00	0.16	0.05	0.16
4	20.92		0.18	0.05	0.15	0.00	0.00	0.01
	0.00	0.79E+06	0.18	0.05	0.15	0.00	0.00	0.01
	0.00	62.96	0.00	0.00	0.00	0.17	0.05	0.16
5	20.92		0.17	0.05	0.15	0.00	0.00	0.01
	0.00	0.79E+06	0.17	0.05	0.15	0.00	0.00	0.01
	0.00	66.00	0.00	0.00	0.00	0.15	0.05	0.16
6	20.92		0.17	0.05	0.15	0.00	0.00	0.02
	0.00	0.79E+06	0.17	0.05	0.15	0.00	0.00	0.02
	0.00	69.06	0.00	0.00	0.00	0.16	0.05	0.16
7	21.04		0.17	0.05	0.15	0.00	0.00	0.01
	-0.01	0.79E+06	0.17	0.05	0.15	0.00	0.00	0.01
	0.00	71.95	0.00	0.00	0.00	0.16	0.05	0.16
8	21.04		0.17	0.05	0.15	0.00	0.00	0.02
	0.01	0.79E+03	0.17	0.05	0.15	0.00	0.00	0.02
	0.00	74.95	0.00	0.00	0.00	0.16	0.05	0.16
9	20.92		0.16	0.05	0.15	0.00	0.00	0.02
	0.01	0.79E+06	0.16	0.05	0.15	0.00	0.00	0.02
	0.00	77.99	0.00	0.00	0.00	0.15	0.05	0.16
10	20.92		0.16	0.05	0.15	0.00	0.00	0.02
	0.01	0.79E+06	0.16	0.05	0.15	0.00	0.00	0.02
	0.00	80.97	0.00	0.00	0.00	0.15	0.05	0.16
11	20.92		0.16	0.05	0.15	0.00	0.00	0.01
	0.00	0.79E+06	0.16	0.05	0.15	0.00	0.00	0.01
	0.00	83.97	0.00	0.00	0.00	0.15	0.05	0.16
12	20.92		0.17	0.05	0.14	0.00	0.00	0.01
	0.00	0.79E+06	0.17	0.05	0.14	0.00	0.00	0.01
	0.00	86.89	0.00	0.00	0.00	0.15	0.05	0.16

PROPULSIVE WING FORCE DATA

SUMMARY, RUN 395

PT	Q ALPHA BETA	REY NO HEIGHT	CL1S CNF1B CNWC	CD1S CAF1B CNWW	CPM1S CPM1B CNWT	CNN1S CNN1B CLTR	CYN1S CYN1B CDTR	CSF1S CSF1B CNTR
2	20.92		0.17	0.05	0.15	0.00	-0.01	0.00
	0.00	0.78E+06	0.17	0.05	0.15	0.00	-0.01	0.00
	0.00	56.97	0.00	0.00	0.00	0.16	0.05	0.16
3	21.04		0.17	0.05	0.15	0.00	-0.01	0.01
	0.01	0.78E+06	0.17	0.05	0.15	0.00	-0.01	0.01
	0.00	60.06	0.00	0.00	0.00	0.16	0.05	0.16
4	21.04		0.17	0.05	0.14	0.00	-0.01	0.01
	0.01	0.78E+06	0.17	0.05	0.14	0.00	-0.01	0.01
	0.00	62.96	0.00	0.00	0.00	0.16	0.05	0.16

PROPULSIVE WING FORCE DATA

SUMMARY, RUN 306

PT	Q ALPHA BETA	REY NO HEIGHT	CL1S CRF1B CNUC	CD1S CAF1B CNUM	CPN1S CPN1B CNUT	CRN1S CRN1B CLTR	CYN1S CYN1B CDTR	CSF1S CSF1B CNTR
1	10.58		0.77	-0.03	0.70	-0.01	-0.01	0.00
	0.01	0.55E+06	0.77	-0.03	0.70	-0.01	-0.01	0.00
	0.00	58.95	0.48	0.00	0.48	0.50	0.18	0.52
2	10.58		0.79	-0.03	0.70	0.00	-0.01	0.00
	0.01	0.55E+06	0.79	-0.03	0.70	0.00	-0.01	0.00
	0.00	58.97	0.48	0.00	0.48	0.52	0.17	0.52
3	10.00		0.78	-0.02	0.00	0.00	-0.01	0.01
	0.01	0.50E+06	0.78	-0.02	0.00	0.00	-0.01	0.01
	0.00	62.97	0.47	0.00	0.47	0.52	0.17	0.52
4	10.58		0.78	-0.02	0.70	0.00	0.00	0.01
	0.01	0.55E+06	0.78	-0.02	0.70	0.00	0.00	0.01
	0.00	65.99	0.48	0.00	0.48	0.51	0.18	0.52
5	10.48		0.79	-0.03	0.70	0.00	0.00	0.01
	-0.03	0.55E+06	0.79	-0.02	0.70	0.00	0.00	0.01
	0.00	68.95	0.49	0.00	0.49	0.52	0.18	0.53
6	10.48		0.80	-0.03	0.70	0.00	0.00	0.00
	0.03	0.55E+06	0.80	-0.03	0.70	0.00	0.00	0.00
	0.00	71.97	0.49	0.00	0.49	0.53	0.18	0.52
7	10.58		0.80	-0.02	0.70	0.00	0.00	0.02
	0.03	0.55E+06	0.80	-0.02	0.70	0.00	0.00	0.02
	0.00	74.98	0.49	0.00	0.49	0.53	0.18	0.52
8	10.01		0.78	-0.02	0.68	0.00	0.01	0.00
	0.03	0.50E+06	0.78	-0.02	0.68	0.00	0.01	0.00
	0.00	78.00	0.48	0.00	0.48	0.50	0.17	0.51
9	10.58		0.79	-0.03	0.00	0.00	0.00	0.01
	0.03	0.55E+06	0.79	-0.03	0.00	0.00	0.00	0.01
	0.00	80.98	0.48	0.00	0.48	0.51	0.18	0.51
10	10.58		0.79	-0.03	0.70	0.00	0.00	0.02
	0.02	0.55E+06	0.79	-0.03	0.70	0.00	0.00	0.02
	0.00	83.97	0.48	0.00	0.48	0.51	0.18	0.52
11	10.58		0.79	-0.03	0.70	0.00	0.00	0.03
	0.02	0.55E+06	0.79	-0.03	0.70	0.00	0.00	0.03
	0.00	86.97	0.49	0.00	0.49	0.52	0.18	0.52

PROPULSIVE WING FORCE DATA

SUMMARY, RUN 307

PT	Q ALPHA BETA	REY NO HEIGHT	CL1S CRF1B CNUC	CD1S CAF1B CNUM	CPN1S CPN1B CNUT	CRN1S CRN1B CLTR	CYN1S CYN1B CDTR	CSF1S CSF1B CNTR
1	5.29		1.11	-0.21	0.94	-0.01	-0.02	-0.01
	0.00	0.30E+06	1.11	-0.21	0.94	-0.01	-0.02	-0.01
	0.00	56.93	0.96	0.00	0.96	0.57	0.20	0.50
2	5.29		1.12	-0.21	0.94	-0.01	-0.02	-0.01
	0.00	0.30E+06	1.12	-0.21	0.94	-0.01	-0.02	-0.01
	0.00	59.99	0.97	0.00	0.97	0.57	0.20	0.50
3	5.29		1.12	-0.21	0.94	-0.01	-0.03	-0.01
	0.00	0.30E+06	1.12	-0.21	0.94	-0.01	-0.03	-0.01
	0.00	62.95	0.97	0.00	0.97	0.57	0.20	0.50
4	5.29		1.12	-0.20	0.95	-0.01	-0.03	0.01
	0.00	0.30E+06	1.12	-0.20	0.95	-0.01	-0.03	0.01
	0.00	65.95	0.97	0.00	0.97	0.57	0.20	0.50
5	5.17		1.13	-0.22	0.97	0.00	0.00	-0.01
	0.00	0.30E+06	1.13	-0.22	0.97	0.00	0.00	-0.01
	0.00	68.97	1.00	0.00	1.00	0.57	0.20	0.01
6	5.40		1.11	-0.20	0.94	-0.01	-0.02	-0.02
	0.00	0.40E+06	1.11	-0.20	0.94	-0.01	-0.02	-0.02
	0.00	71.98	0.95	0.00	0.95	0.57	0.20	0.50
7	5.29		1.10	-0.20	0.96	-0.01	-0.03	-0.01
	0.00	0.30E+06	1.10	-0.20	0.96	-0.01	-0.03	-0.01
	0.00	74.98	0.98	0.00	0.98	0.58	0.20	0.50
8	5.29		1.11	-0.21	0.95	-0.01	-0.01	-0.01
	-0.01	0.30E+06	1.11	-0.21	0.95	-0.01	-0.01	-0.01
	0.00	77.98	0.98	0.00	0.98	0.58	0.20	0.50
9	5.29		1.10	-0.21	0.95	-0.01	-0.01	0.01
	-0.01	0.30E+06	1.10	-0.21	0.95	-0.01	-0.01	0.01
	0.00	80.95	0.97	0.00	0.97	0.56	0.20	0.50
10	5.17		1.10	-0.21	0.98	-0.01	-0.01	0.01
	-0.02	0.30E+06	1.10	-0.21	0.98	-0.01	-0.01	0.01
	0.00	83.95	0.99	0.00	0.99	0.54	0.20	0.01
11	5.29		1.15	-0.21	0.95	-0.01	-0.01	0.00
	-0.02	0.30E+06	1.15	-0.21	0.95	-0.01	-0.01	0.00
	0.00	86.97	0.99	0.00	0.99	0.60	0.20	0.50

PROPULSIVE WING FORCE DATA

SUMMARY, RUN 390

PT	Q ALPHA BETA	RET NO HEIGHT	CL1S CNF1B CNUC	CD1S CAF1B CNUM	CPN1S CPN1B CNUT	CMN1S CMN1B CLTR	CYR1S CYR1B CDTR	CSF1S CSF1B CNTR
3	21.15		0.18	0.05	0.14	0.00	0.00	0.00
	0.02	0.78E+06	0.18	0.05	0.14	0.00	0.00	0.00
	0.00	58.96	0.00	0.00	0.00	-0.14	-0.18	0.15
4	21.04		0.17	0.05	0.15	0.00	0.00	0.00
	0.02	0.77E+06	0.17	0.05	0.15	0.00	0.00	0.00
	0.00	60.00	0.00	0.00	0.00	-0.14	-0.18	0.16
5	21.15		0.17	0.05	0.14	0.00	0.00	0.00
	0.02	0.78E+06	0.17	0.05	0.14	0.00	0.00	0.00
	0.00	62.97	0.00	0.00	0.00	-0.14	-0.17	0.15
6	21.04		0.17	0.05	0.15	0.00	0.00	0.01
	0.01	0.77E+06	0.17	0.05	0.15	0.00	0.00	0.01
	0.00	65.96	0.00	0.00	0.00	-0.14	-0.18	0.16
7	21.04		0.17	0.05	0.14	0.00	0.00	0.01
	0.01	0.77E+06	0.17	0.05	0.14	0.00	0.00	0.01
	0.00	69.01	0.00	0.00	0.00	-0.14	-0.18	0.15
8	21.15		0.17	0.05	0.14	0.00	0.00	0.01
	0.01	0.78E+06	0.17	0.05	0.14	0.00	0.00	0.01
	0.00	71.97	0.00	0.00	0.00	-0.14	-0.18	0.15
9	21.04		0.17	0.05	0.14	0.00	0.00	0.01
	0.01	0.77E+06	0.17	0.05	0.14	0.00	0.00	0.01
	0.00	74.95	0.00	0.00	0.00	-0.14	-0.18	0.15
10	21.15		0.17	0.05	0.14	0.00	0.00	0.01
	0.00	0.78E+06	0.17	0.05	0.14	0.00	0.00	0.01
	0.00	78.02	0.00	0.00	0.00	-0.14	-0.18	0.15
11	21.04		0.18	0.05	0.14	0.00	0.00	0.01
	0.00	0.77E+06	0.18	0.05	0.14	0.00	0.00	0.01
	0.00	80.97	0.00	0.00	0.00	-0.14	-0.18	0.15
12	21.04		0.17	0.05	0.14	0.00	0.00	0.01
	0.00	0.78E+06	0.17	0.05	0.14	0.00	0.00	0.01
	0.00	83.95	0.00	0.00	0.00	-0.15	-0.18	0.15
13	20.92		0.17	0.05	0.14	0.00	0.00	0.01
	-0.01	0.77E+06	0.17	0.05	0.14	0.00	0.00	0.01
	0.00	87.10	0.00	0.00	0.00	-0.15	-0.18	0.15

PROPULSIVE WING FORCE DATA

SUMMARY, RUN 400

PT	Q ALPHA BETA	RET NO HEIGHT	CL1S CNF1B CNUC	CD1S CAF1B CNUM	CPN1S CPN1B CNUT	CMN1S CMN1B CLTR	CYR1S CYR1B CDTR	CSF1S CSF1B CNTR
1	10.58		0.01	-0.02	0.00	0.00	0.01	0.03
	0.02	0.55E+06	0.01	-0.02	0.00	0.00	0.01	0.03
	0.00	58.95	0.48	0.00	0.48	-0.03	0.47	0.02
2	10.48		0.02	-0.02	0.70	0.00	0.01	0.02
	0.02	0.55E+06	0.02	-0.02	0.70	0.00	0.01	0.02
	0.00	59.96	0.49	0.00	0.49	-0.05	0.47	0.04
3	10.48		0.02	-0.02	0.70	0.00	0.00	0.03
	0.02	0.55E+06	0.02	-0.02	0.70	0.00	0.00	0.03
	0.00	62.95	0.50	0.00	0.50	-0.06	0.47	0.03
4	10.58		0.02	-0.02	0.00	0.00	0.00	0.03
	0.02	0.55E+06	0.02	-0.02	0.00	0.00	0.00	0.03
	0.00	65.95	0.48	0.00	0.48	-0.05	0.46	0.03
5	10.48		0.01	-0.02	0.00	0.00	0.00	0.03
	0.00	0.55E+06	0.01	-0.02	0.00	0.00	0.00	0.03
	0.00	68.95	0.49	0.00	0.49	-0.07	0.47	0.03
6	10.58		0.01	-0.02	0.00	0.00	0.00	0.03
	0.00	0.55E+06	0.01	-0.02	0.00	0.00	0.00	0.03
	0.00	72.03	0.49	0.00	0.49	-0.06	0.46	0.02
7	10.58		0.01	-0.02	0.00	0.00	0.00	0.03
	0.00	0.55E+06	0.01	-0.02	0.00	0.00	0.00	0.03
	0.00	75.03	0.49	0.00	0.49	-0.07	0.46	0.02
8	10.48		0.00	-0.02	0.00	0.00	0.00	0.03
	-0.01	0.55E+06	0.00	-0.02	0.00	0.00	0.00	0.03
	0.00	78.01	0.50	0.00	0.50	-0.06	0.46	0.03
9	10.48		0.01	-0.02	0.00	0.00	0.00	0.03
	-0.01	0.55E+06	0.01	-0.02	0.00	0.00	0.00	0.03
	0.00	81.01	0.50	0.00	0.50	-0.06	0.46	0.03
10	10.48		0.01	-0.03	0.00	0.00	0.00	0.03
	0.02	0.55E+06	0.01	-0.03	0.00	0.00	0.00	0.03
	0.00	84.02	0.49	0.00	0.49	-0.06	0.46	0.03
11	10.48		0.02	-0.02	0.00	0.00	0.00	0.03
	0.02	0.55E+06	0.02	-0.02	0.00	0.00	0.00	0.03
	0.00	87.03	0.50	0.00	0.50	-0.07	0.46	0.03

PROPULSIVE WING FORCE DATA

SUMMARY, RUN 401

PT	Q ALPHA BETA	REY NO HEIGHT	CL1S CSF1S CNUC	CD1S CAF1S CNUN	CPM1S CPN1S CNUT	CNM1S CNN1S CLTR	CYM1S CYN1S CDTR	CSF1S CSF1S CNTR
1	5.17 -0.16 0.00	0.30E+06 87.03	1.16 1.16 1.02	-0.22 -0.21 0.00	0.94 0.94 1.02	0.00 0.00 -0.04	0.00 0.00 0.77	0.04 0.04 1.23
2	5.17 -0.04 0.00	0.30E+06 84.04	1.18 1.18 1.00	-0.21 -0.21 0.00	0.95 0.95 1.00	0.00 0.00 -0.03	0.00 0.00 0.77	0.04 0.04 1.23
3	5.17 -0.01 0.00	0.30E+06 81.03	1.17 1.17 1.01	-0.21 -0.21 0.00	0.95 0.95 1.01	0.00 0.00 -0.04	0.00 0.00 0.78	0.06 0.06 1.24
4	5.17 0.00 0.00	0.30E+06 78.07	1.17 1.17 1.01	-0.21 -0.21 0.00	0.96 0.96 1.01	0.00 0.00 -0.05	0.01 0.01 0.78	0.05 0.05 1.24
5	5.17 0.00 0.00	0.30E+06 75.06	1.18 1.18 1.01	-0.21 -0.21 0.00	0.95 0.95 1.01	0.00 0.00 -0.05	0.00 0.00 0.77	0.04 0.04 1.24
6	5.20 0.00 0.00	0.30E+06 72.06	1.16 1.16 0.99	-0.20 -0.20 0.00	0.93 0.93 0.99	0.00 0.00 -0.02	0.00 0.00 0.78	0.04 0.04 1.21
7	5.17 0.01 0.00	0.30E+06 69.02	1.18 1.18 1.02	-0.20 -0.20 0.00	0.95 0.95 1.02	0.00 0.00 -0.03	0.00 0.00 0.78	0.05 0.05 1.24
8	5.17 0.01 0.00	0.30E+06 66.00	1.17 1.17 1.01	-0.21 -0.21 0.00	0.96 0.96 1.01	0.00 0.00 -0.05	0.00 0.00 0.77	0.05 0.05 1.24
9	5.40 0.01 0.00	0.40E+06 63.02	1.12 1.12 0.97	-0.20 -0.20 0.00	0.93 0.93 0.97	0.00 0.00 -0.02	0.01 0.01 0.74	0.03 0.03 1.20
10	5.40 0.01 0.00	0.40E+06 60.04	1.13 1.13 0.97	-0.20 -0.20 0.00	0.93 0.93 0.97	0.00 0.00 -0.02	0.01 0.01 0.74	0.03 0.03 1.20
11	5.40 0.01 0.00	0.40E+06 57.07	1.14 1.14 0.98	-0.20 -0.20 0.00	0.92 0.92 0.98	0.00 0.00 -0.01	0.00 0.00 0.74	0.03 0.03 1.18

PROPULSIVE WING FORCE DATA

SUMMARY, RUN 402

PT	Q ALPHA BETA	REY NO HEIGHT	CL1S CSF1S CNUC	CD1S CAF1S CNUN	CPM1S CPN1S CNUT	CNM1S CNN1S CLTR	CYM1S CYN1S CDTR	CSF1S CSF1S CNTR
2	21.04 -0.02 0.00	0.77E+06 57.03	0.18 0.18 0.00	0.05 0.05 0.00	0.14 0.14 0.00	0.00 0.00 -0.14	0.00 0.00 -0.18	0.00 0.00 0.15
3	21.04 -0.02 0.00	0.77E+06 60.04	0.17 0.17 0.00	0.05 0.05 0.00	0.14 0.14 0.00	0.00 0.00 -0.15	0.00 0.00 -0.18	0.00 0.00 0.15
4	21.15 0.03 0.00	0.78E+06 63.10	0.17 0.17 0.00	0.05 0.05 0.00	0.14 0.14 0.00	0.00 0.00 -0.14	0.00 0.00 -0.18	0.00 0.00 0.18
5	21.04 -0.02 0.00	0.77E+06 66.03	0.18 0.18 0.00	0.05 0.05 0.00	0.14 0.14 0.00	0.00 0.00 -0.14	0.00 0.00 -0.18	0.01 0.01 0.15
6	21.15 -0.02 0.00	0.78E+06 69.06	0.17 0.17 0.00	0.05 0.05 0.00	0.14 0.14 0.00	0.00 0.00 -0.14	0.00 0.00 -0.18	0.01 0.01 0.15
7	21.15 -0.02 0.00	0.78E+06 72.10	0.17 0.17 0.00	0.05 0.05 0.00	0.14 0.14 0.00	0.00 0.00 -0.15	0.00 0.00 -0.18	0.01 0.01 0.15
8	21.15 -0.02 0.00	0.78E+06 75.00	0.17 0.17 0.00	0.05 0.05 0.00	0.14 0.14 0.00	0.00 0.00 -0.14	0.00 0.00 -0.18	0.01 0.01 0.15
9	21.15 -0.03 0.00	0.78E+06 78.01	0.17 0.17 0.00	0.05 0.05 0.00	0.14 0.14 0.00	0.00 0.00 -0.14	0.00 0.00 -0.18	0.01 0.01 0.15
10	21.04 0.00 0.00	0.77E+06 81.11	0.17 0.17 0.00	0.05 0.05 0.00	0.14 0.14 0.00	0.00 0.00 -0.15	0.00 0.00 -0.18	0.01 0.01 0.15
11	21.04 0.00 0.00	0.77E+06 84.04	0.17 0.17 0.00	0.05 0.05 0.00	0.14 0.14 0.00	0.00 0.00 -0.15	0.00 0.00 -0.18	0.01 0.01 0.15
12	21.04 0.00 0.00	0.77E+06 87.02	0.17 0.17 0.00	0.05 0.05 0.00	0.14 0.14 0.00	0.00 0.00 -0.15	0.00 0.00 -0.18	0.01 0.01 0.15

PROPULSIVE WING FORCE DATA

SUMMARY, RUN 403

PT	Q ALPHA BETA	REY NO HEIGHT	CLIS CNFIS CNWC	CDIS CAFIS CNWA	CPNIS CPNIS CNWT	CMNIS CMNIS CLTR	CYNIS CYNIS CDTR	CSFIS CSFIS CNTR
1	10.58		0.77	-0.03	0.88	0.00	0.00	0.03
	-0.08	0.55E+06	0.77	-0.03	0.88	0.00	0.00	0.03
	0.00	87.05	0.48	0.00	0.48	-0.06	0.46	0.82
2	10.58		0.81	-0.03	0.88	0.00	0.00	0.02
	0.03	0.55E+06	0.81	-0.03	0.88	0.00	0.00	0.02
	0.00	87.02	0.48	0.00	0.48	-0.06	0.46	0.82
3	10.08		0.80	-0.03	0.88	0.00	0.00	0.03
	-0.10	0.55E+06	0.80	-0.03	0.88	0.00	0.00	0.03
	0.00	84.03	0.48	0.00	0.48	-0.06	0.45	0.81
4	10.58		0.80	-0.03	0.88	0.00	0.00	0.03
	-0.08	0.55E+06	0.80	-0.03	0.88	0.00	0.00	0.03
	0.00	81.13	0.48	0.00	0.48	-0.06	0.46	0.82
5	10.58		0.81	-0.03	0.88	0.00	0.00	0.02
	0.04	0.55E+06	0.81	-0.03	0.88	0.00	0.00	0.02
	0.00	78.12	0.48	0.00	0.48	-0.06	0.46	0.82
6	10.58		0.81	-0.03	0.88	0.00	0.00	0.02
	-0.01	0.55E+06	0.81	-0.03	0.88	0.00	0.00	0.02
	0.00	75.04	0.48	0.00	0.48	-0.06	0.46	0.82
7	10.58		0.80	-0.03	0.88	0.00	0.00	0.02
	-0.08	0.55E+06	0.80	-0.03	0.88	0.00	0.00	0.02
	0.00	72.29	0.50	0.00	0.50	-0.07	0.46	0.82
8	10.58		0.81	-0.03	0.88	0.00	0.00	0.02
	0.02	0.55E+06	0.81	-0.03	0.88	0.00	0.00	0.02
	0.00	68.06	0.48	0.00	0.48	-0.07	0.45	0.83
9	10.58		0.81	-0.03	0.88	0.00	0.00	0.02
	-0.08	0.55E+06	0.81	-0.03	0.88	0.00	0.00	0.02
	0.00	66.22	0.50	0.00	0.50	-0.07	0.46	0.82
10	10.58		0.82	-0.03	0.88	0.00	0.00	0.01
	-0.05	0.55E+06	0.82	-0.03	0.88	0.00	0.00	0.01
	0.00	63.03	0.50	0.00	0.50	-0.06	0.45	0.83
11	10.58		0.82	-0.03	0.88	0.00	0.00	0.01
	-0.08	0.55E+06	0.82	-0.03	0.88	0.00	0.00	0.01
	0.00	60.47	0.50	0.00	0.50	-0.07	0.45	0.82
12	10.58		0.82	-0.03	0.88	0.00	0.00	0.01
	0.08	0.55E+06	0.82	-0.03	0.88	0.00	0.00	0.01
	0.00	57.20	0.50	0.00	0.50	-0.06	0.45	0.83

PROPULSIVE WING FORCE DATA

SUMMARY, RUN 404

PT	Q ALPHA BETA	REY NO HEIGHT	CLIS CNFIS CNWC	CDIS CAFIS CNWA	CPNIS CPNIS CNWT	CMNIS CMNIS CLTR	CYNIS CYNIS CDTR	CSFIS CSFIS CNTR
1	5.29		1.18	-0.21	0.94	0.00	0.01	0.02
	0.00	0.30E+06	1.18	-0.21	0.94	0.00	0.01	0.02
	0.00	57.88	1.00	0.00	1.00	-0.57	0.75	1.22
2	5.29		1.17	-0.20	0.94	0.00	0.00	0.04
	0.02	0.30E+06	1.17	-0.21	0.94	0.00	0.00	0.04
	0.00	60.75	0.98	0.00	0.98	-0.60	0.76	1.22
3	5.29		1.18	-0.21	0.94	0.00	0.01	0.02
	0.02	0.30E+06	1.18	-0.21	0.94	0.00	0.01	0.02
	0.00	63.04	0.98	0.00	0.98	-0.59	0.75	1.22
4	5.29		1.17	-0.21	0.94	0.00	0.00	0.05
	0.02	0.30E+06	1.17	-0.21	0.94	0.00	0.00	0.05
	0.00	66.53	0.98	0.00	0.98	-0.60	0.76	1.22
5	5.29		1.14	-0.21	0.94	0.00	0.00	0.04
	0.06	0.30E+06	1.14	-0.21	0.94	0.00	0.00	0.04
	0.00	68.09	0.98	0.00	0.98	-0.63	0.76	1.22
6	5.40		1.15	-0.21	0.92	0.00	0.00	0.04
	0.07	0.40E+06	1.15	-0.21	0.92	0.00	0.00	0.04
	0.00	72.01	0.98	0.00	0.98	-0.58	0.73	1.19
7	5.29		1.18	-0.21	0.94	0.00	0.00	0.03
	0.07	0.30E+06	1.18	-0.21	0.94	0.00	0.00	0.03
	0.00	75.06	1.00	0.00	1.00	-0.61	0.75	1.22
8	5.29		1.18	-0.22	0.92	0.00	0.01	0.03
	0.08	0.30E+06	1.18	-0.22	0.92	0.00	0.01	0.03
	0.00	78.07	1.00	0.00	1.00	-0.62	0.74	1.20
9	5.17		1.18	-0.21	0.95	0.00	0.00	0.00
	0.00	0.30E+06	1.18	-0.21	0.95	0.00	0.00	0.00
	0.00	81.11	1.02	0.00	1.02	-0.63	0.77	1.24
10	5.29		1.17	-0.22	0.93	0.00	0.00	0.04
	0.00	0.30E+06	1.17	-0.22	0.93	0.00	0.00	0.04
	0.00	84.00	1.00	0.00	1.00	-0.61	0.75	1.21
11	5.29		1.18	-0.22	0.94	0.00	0.00	0.04
	-0.01	0.30E+06	1.18	-0.22	0.94	0.00	0.00	0.04
	0.00	87.01	1.00	0.00	1.00	-0.61	0.74	1.21

PROPULSIVE WING FORCE DATA

SUMMARY, RUN 400

PT	Q ALPHA BETA	REY NO HEIGHT	CL15 CNF10 CNWC	CD15 CAF10 CNWA	CPM15 CPM10 CMWT	CBM15 CBM10 CLTR	CYM15 CYM10 CDTR	CSF15 CSF10 CNTR
1	5.20		0.22	0.06	0.14	0.00	0.00	0.02
	0.05	0.30E+06	0.22	0.06	0.14	0.00	0.00	0.02
	0.00	30.23	0.00	0.00	0.00	-1.00	-0.08	0.10
2	10.50		0.10	0.05	0.15	0.00	0.00	0.01
	0.11	0.50E+06	0.10	0.05	0.15	0.00	0.00	0.01
	0.00	30.23	0.00	0.00	0.00	-0.45	-0.40	0.17
3	21.15		0.10	0.05	0.15	0.00	0.00	0.01
	0.24	0.70E+06	0.10	0.05	0.15	0.00	0.00	0.01
	0.00	30.23	0.00	0.00	0.00	-0.13	-0.18	0.17

PROPULSIVE WING FORCE DATA

SUMMARY, RUN 400

PT	Q ALPHA BETA	REY NO HEIGHT	CL15 CNF10 CNWC	CD15 CAF10 CNWA	CPM15 CPM10 CMWT	CBM15 CBM10 CLTR	CYM15 CYM10 CDTR	CSF15 CSF10 CNTR
2	0.00		0.78	-15.44	10.71	-1.00	25.30	-0.24
	-0.01	0.30E+06	0.78	-15.44	10.71	-1.00	25.30	-0.24
	0.00	57.02	4.05	0.00	4.05	-63.02	-73.53	13.04
3	0.00		2.00	-24.50	21.22	4.20	69.13	-0.42
	-0.01	0.30E+06	2.01	-24.50	21.22	4.21	40.13	-0.42
	0.00	57.02	25.51	0.00	25.51	-60.10	-17.70	26.53
4	0.00		2.02	-35.46	40.54	4.27	02.05	-1.24
	0.00	0.30E+06	2.02	-35.46	40.54	4.27	02.05	-1.24
	0.00	57.02	40.73	0.00	40.73	-70.13	12.26	58.00
5	0.00		3.50	-47.00	00.20	8.41	03.20	-0.02
	0.00	0.30E+06	3.50	-47.00	00.20	8.41	03.20	-0.00
	0.00	57.02	56.00	0.00	56.00	-03.35	10.00	00.41
6	0.00		5.35	-01.03	03.42	11.71	00.00	-1.51
	0.01	0.30E+06	5.54	-01.03	03.42	11.70	00.00	-1.51
	0.00	57.02	74.07	0.00	74.07	-141.00	-6.30	04.44

PROPULSIVE WING FORCE DATA

SUMMARY, RUN 407

PT	Q ALPHA BETA	REY NO HEIGHT	CL15 CNF16 CNUC	CD15 CAF16 CNWW	CPR15 CPR16 CNWT	CBR15 CBR16 CLTR	CYR15 CYR16 CDTR	CSF15 CSF16 CNTR
4	0.00		0.54	-18.05	18.44	-2.00	-0.14	0.38
	0.00	0.30E+06	0.54	-18.05	18.44	-2.00	-0.14	0.38
	0.00	48.05	17.29	0.00	17.29	-75.00	-40.30	23.00
5	0.00		2.00	-28.01	10.14	-1.06	-20.07	1.35
	0.00	0.30E+06	2.00	-28.01	10.14	-1.06	-20.07	1.35
	0.00	48.05	22.10	0.00	22.10	-05.00	-0.05	10.31
6	0.00		2.40	-42.75	40.00	-4.29	-42.10	1.04
	0.01	0.30E+06	2.20	-42.75	40.00	-4.29	-42.10	1.04
	0.00	48.05	50.06	0.00	50.06	-83.52	20.01	95.44
7	0.00		6.23	-56.20	51.42	-1.07	-30.21	0.74
	0.01	0.30E+06	6.22	-56.20	51.42	-1.06	30.21	0.74
	0.00	48.05	67.01	0.00	67.01	-121.70	5.62	70.03
8	0.00		5.14	-71.01	107.30	-3.02	-48.10	1.14
	0.02	0.30E+06	5.11	-71.02	107.30	-3.01	-48.10	1.14
	0.00	48.05	68.77	0.00	68.77	-205.40	-51.79	132.50

PROPULSIVE WING FORCE DATA

SUMMARY, RUN 408

PT	Q ALPHA BETA	REY NO HEIGHT	CL15 CNF16 CNUC	CD15 CAF16 CNWW	CPR15 CPR16 CNWT	CBR15 CBR16 CLTR	CYR15 CYR16 CDTR	CSF15 CSF16 CNTR
2	0.00		0.00	-24.01	35.10	-0.52	-10.01	-0.13
	0.00	0.30E+06	0.00	-24.01	35.10	-0.52	-10.01	-0.13
	0.00	48.05	32.34	0.00	32.34	-00.73	17.02	49.06
3	0.00		0.30	-45.06	38.00	-0.00	-40.00	0.16
	0.01	0.30E+06	0.29	-45.06	38.00	-0.00	-40.00	0.16
	0.00	48.05	50.01	0.00	50.01	-125.00	14.07	50.06
4	0.00		7.43	-53.05	41.50	-0.00	-50.05	0.06
	0.01	0.30E+06	7.41	-53.05	41.50	-0.00	-50.05	0.06
	0.00	48.05	70.43	0.00	70.43	-172.10	-15.16	64.00
5	0.00		7.44	-60.10	00.00	-0.70	-42.41	0.54
	0.02	0.30E+06	7.41	-60.20	00.00	-0.00	-42.41	0.54
	0.00	48.05	00.53	0.00	00.53	-202.30	-104.10	110.30
6	0.00		0.57	-73.00	03.00	-0.10	-47.00	-0.76
	0.02	0.30E+06	0.54	-73.01	03.05	-0.00	-47.00	-0.76
	0.00	48.05	06.31	0.00	06.31	-320.30	-147.50	115.30

PROPULSIVE WING FORCE DATA

SUMMARY, RUN 400

PT	Q ALPHA BETA	REY NO HEIGHT	CL1S CNF1B CNUC	CD1S CAF1B CNUU	CPM1S CPM1B CMUT	CBM1S CBM1B CLTR	CYM1S CYM1B CDTR	CSF1S CSF1B CNTR
2	20.02		0.05	0.01	0.03	0.00	0.00	0.01
	0.05	0.00E+00	0.05	0.01	0.03	0.00	0.00	0.01
	0.00	57.02	0.00	0.00	0.00	-0.27	-0.22	0.05
3	21.15		0.05	0.01	0.03	0.00	0.00	0.01
	0.05	0.00E+00	0.05	0.01	0.03	0.00	0.00	0.01
	0.00	60.01	0.00	0.00	0.00	-0.26	-0.22	0.04
4	21.04		0.05	0.01	0.03	0.00	0.00	0.01
	0.05	0.00E+00	0.05	0.01	0.03	0.00	0.00	0.01
	0.00	63.00	0.00	0.00	0.00	-0.27	-0.22	0.04
5	21.04		0.05	0.01	0.03	0.00	0.00	0.01
	0.02	0.00E+00	0.05	0.01	0.03	0.00	0.00	0.01
	0.00	66.04	0.00	0.00	0.00	-0.27	-0.22	0.04
6	21.15		0.05	0.01	0.03	0.00	0.00	0.01
	-0.01	0.00E+00	0.05	0.01	0.03	0.00	0.00	0.01
	0.00	69.01	0.00	0.00	0.00	-0.26	-0.22	0.04
7	21.04		0.05	0.01	0.03	0.00	0.00	0.01
	-0.01	0.00E+00	0.05	0.01	0.03	0.00	0.00	0.01
	0.00	72.01	0.00	0.00	0.00	-0.27	-0.22	0.04
8	21.04		0.05	0.01	0.03	0.00	0.00	0.01
	-0.01	0.00E+00	0.05	0.01	0.03	0.00	0.00	0.01
	0.00	75.10	0.00	0.00	0.00	-0.26	-0.22	0.04
9	21.04		0.05	0.01	0.03	0.00	0.00	0.01
	-0.02	0.00E+00	0.05	0.01	0.03	0.00	0.00	0.01
	0.00	78.01	0.00	0.00	0.00	-0.27	-0.22	0.04
10	21.04		0.05	0.01	0.03	0.00	0.00	0.01
	-0.02	0.00E+00	0.05	0.01	0.03	0.00	0.00	0.01
	0.00	81.02	0.00	0.00	0.00	-0.27	-0.22	0.04
11	20.02		0.05	0.01	0.03	0.00	0.00	0.02
	-0.02	0.00E+00	0.05	0.01	0.03	0.00	0.00	0.02
	0.00	84.03	0.00	0.00	0.00	-0.27	-0.22	0.04
12	20.02		0.04	0.01	0.03	0.00	0.00	0.01
	-0.03	0.00E+00	0.04	0.01	0.03	0.00	0.00	0.01
	0.00	87.04	0.00	0.00	0.00	-0.28	-0.22	0.04

PROPULSIVE WING FORCE DATA

SUMMARY, RUN 410

PT	Q ALPHA BETA	REY NO HEIGHT	CL1S CNF1B CNUC	CD1S CAF1B CNUU	CPM1S CPM1B CMUT	CBM1S CBM1B CLTR	CYM1S CYM1B CDTR	CSF1S CSF1B CNTR
1	0.00		4.77	-16.15	-3.00	0.70	-13.07	2.06
	-0.05	0.30E+00	4.79	-15.14	-3.00	0.77	-13.07	2.06
	0.00	57.00	16.44	0.00	16.44	-00.00	-20.00	2.74
2	0.00		5.10	-25.30	7.17	0.31	-25.00	2.00
	-0.05	0.30E+00	5.21	-25.30	7.17	0.29	-25.00	2.00
	0.00	57.00	33.00	0.00	33.00	-00.00	20.13	16.30
3	0.00		7.70	-34.00	5.41	1.00	-32.07	2.53
	-0.04	0.30E+00	7.73	-34.07	5.41	1.02	-32.07	2.53
	0.00	57.00	40.04	0.00	40.04	-03.43	20.00	20.77
4	0.00		4.43	-40.57	40.00	-3.50	-40.10	1.00
	-0.04	0.30E+00	4.47	-40.56	40.00	-3.03	-40.10	1.00
	0.00	57.00	00.40	0.00	00.40	-120.50	14.44	00.53

PROPULSIVE WING FORCE DATA

SUMMARY. RUN 411

PT	Q ALPHA BETA	REY NO HEIGHT	CL1S CSF1B CNUC	CD1S CAF1B CNUM	CPM1S CPM1B CNUT	CBM1S CBM1B CLTR	CYM1S CYM1B CDTR	CSF1S CSF1B CNTR
2	10.58		0.15	-0.29	0.00	0.00	0.00	0.00
	0.02	0.57E+06	0.15	-0.29	0.00	0.00	0.00	0.00
	0.00	57.00	0.41	0.00	0.41	0.10	0.02	0.07
3	10.58		0.14	-0.29	0.00	0.00	0.00	0.00
	0.02	0.57E+06	0.13	-0.29	0.00	0.03	0.00	0.00
	0.00	60.38	0.41	0.00	0.41	0.00	0.02	0.07
4	10.58		0.13	-0.29	0.00	0.00	0.00	0.00
	0.01	0.57E+06	0.13	-0.29	0.00	0.00	0.00	0.00
	0.00	63.00	0.41	0.00	0.41	0.00	0.01	0.07
5	10.46		0.13	-0.29	0.00	0.00	0.00	0.01
	0.01	0.57E+06	0.13	-0.29	0.00	0.00	0.00	0.01
	0.00	66.01	0.41	0.00	0.41	0.00	0.02	0.07
6	10.58		0.13	-0.29	0.00	0.00	0.00	0.01
	0.01	0.57E+06	0.13	-0.29	0.00	0.00	0.00	0.01
	0.00	69.05	0.41	0.00	0.41	0.00	0.01	0.07
7	10.58		0.13	-0.29	0.00	0.00	-0.01	0.01
	0.01	0.57E+06	0.13	-0.29	0.00	0.00	-0.01	0.01
	0.00	72.03	0.41	0.00	0.41	0.00	0.02	0.07
8	10.46		0.13	-0.30	0.00	0.00	0.00	0.00
	0.01	0.57E+06	0.13	-0.30	0.00	0.00	0.00	0.00
	0.00	75.02	0.42	0.00	0.42	0.00	0.01	0.07
9	10.58		0.13	-0.29	0.07	0.00	-0.01	0.02
	0.01	0.57E+06	0.13	-0.29	0.07	0.00	-0.01	0.02
	0.00	78.00	0.41	0.00	0.41	0.00	0.02	0.07
10	10.58		0.13	-0.29	0.07	0.00	-0.01	0.01
	0.00	0.57E+06	0.13	-0.29	0.07	0.00	-0.01	0.01
	0.00	81.03	0.41	0.00	0.41	0.00	0.02	0.07
11	10.46		0.14	-0.28	0.07	0.00	0.00	0.01
	0.00	0.57E+06	0.14	-0.28	0.07	0.00	0.00	0.01
	0.00	84.01	0.42	0.00	0.42	0.00	0.02	0.07
2	10.46		0.14	-0.28	0.07	0.00	-0.01	0.02
	0.00	0.57E+06	0.14	-0.29	0.07	0.00	-0.01	0.02
	0.00	87.02	0.42	0.00	0.42	0.00	0.02	0.07

PROPULSIVE WING FORCE DATA

SUMMARY. RUN 412

PT	Q ALPHA BETA	REY NO HEIGHT	CL1S CSF1B CNUC	CD1S CAF1B CNUM	CPM1S CPM1B CNUT	CBM1S CBM1B CLTR	CYM1S CYM1B CDTR	CSF1S CSF1B CNTR
1	5.17		0.18	-0.00	0.10	0.00	-0.01	0.02
	-0.01	0.40E+06	0.18	-0.00	0.10	0.00	-0.01	0.02
	0.00	57.02	0.84	0.00	0.84	0.00	0.03	0.00
2	5.29		0.19	-0.00	0.00	0.00	-0.01	0.00
	-0.01	0.40E+06	0.19	0.00	0.00	0.00	-0.01	0.00
	0.00	60.00	0.83	0.00	0.83	0.00	0.02	0.08
3	5.29		0.20	-0.00	0.10	0.00	-0.01	0.01
	-0.01	0.40E+06	0.20	-0.00	0.10	0.00	-0.01	0.01
	0.00	63.01	0.83	0.00	0.83	0.10	0.02	0.00
4	5.29		0.20	-0.00	0.10	0.00	-0.01	0.00
	-0.01	0.40E+06	0.20	-0.00	0.10	0.00	-0.01	0.00
	0.00	66.02	0.82	0.00	0.82	0.11	0.02	0.00
5	5.17		0.20	-0.01	0.10	0.00	-0.01	0.01
	-0.02	0.40E+06	0.20	-0.01	0.10	0.00	-0.01	0.01
	0.00	69.00	0.84	0.00	0.84	0.11	0.02	0.00
6	5.29		0.18	-0.00	0.00	0.00	-0.01	0.02
	-0.02	0.40E+06	0.18	-0.00	0.00	0.00	-0.01	0.02
	0.00	72.01	0.82	0.00	0.82	0.07	0.02	0.00
7	5.17		0.21	-0.01	0.00	0.00	-0.01	0.01
	-0.02	0.40E+06	0.21	-0.01	0.00	0.00	-0.01	0.01
	0.00	75.03	0.84	0.00	0.84	0.11	0.02	0.00
8	5.29		0.17	-0.00	0.10	0.00	-0.01	0.01
	-0.02	0.40E+06	0.17	-0.00	0.10	0.00	-0.01	0.01
	0.00	78.00	0.82	0.00	0.82	0.00	0.01	0.00
9	5.29		0.19	-0.00	0.00	0.00	-0.01	0.02
	-0.03	0.40E+06	0.19	-0.00	0.00	0.00	-0.01	0.02
	0.00	81.03	0.83	0.00	0.83	0.10	0.02	0.00
10	5.29		0.18	-0.00	0.00	0.00	-0.01	0.02
	-0.03	0.40E+06	0.18	-0.00	0.00	0.00	-0.01	0.02
	0.00	84.14	0.83	0.00	0.83	0.00	0.02	0.07
11	5.17		0.21	-0.02	0.00	0.00	-0.01	0.01
	-0.04	0.40E+06	0.21	-0.02	0.00	0.00	-0.01	0.01
	0.00	87.03	0.84	0.00	0.84	0.11	0.01	0.00

PROPULSIVE WING FORCE DATA

SUMMARY, RUN 413

PT	Q ALPHA BETA	REY NO HEIGHT	CL1S CRF1B CRWC	CD1S CAF1B CRWW	CPM1S CPM1B CRWT	CRM1S CRM1B CLTR	CYN1S CYN1B CDTR	CSF1S CSF1B CNTR
1	5.40		0.04	0.01	0.03	0.00	0.00	0.00
	-0.03	0.41E+06	0.04	0.01	0.03	0.00	0.00	0.00
	0.00	30.39	0.00	0.00	0.00	0.27	0.12	-0.02
2	10.48		0.04	0.01	0.04	0.00	0.00	0.00
	-0.02	0.57E+06	0.04	0.01	0.04	0.00	0.00	0.00
	0.00	30.39	0.00	0.00	0.00	0.16	0.07	0.01
3	20.92		0.04	0.01	0.04	0.00	0.00	0.00
	0.01	0.80E+06	0.04	0.01	0.04	0.00	0.00	0.00
	0.00	30.39	0.00	0.00	0.00	0.10	0.04	0.02

PROPULSIVE WING FORCE DATA

SUMMARY, RUN 414

PT	Q ALPHA BETA	REY NO HEIGHT	CL1S CRF1B CRWC	CD1S CAF1B CRWW	CPM1S CPM1B CRWT	CRM1S CRM1B CLTR	CYN1S CYN1B CDTR	CSF1S CSF1B CNTR
2	5.17		0.01	0.02	0.04	0.00	0.00	-0.01
	0.02	0.40E+06	0.02	0.02	0.04	0.00	0.00	-0.01
	0.00	29.86	0.00	0.00	0.00	0.25	0.14	-0.02
3	10.58		0.04	0.02	0.04	0.00	0.00	-0.01
	0.03	0.58E+06	0.04	0.02	0.04	0.00	0.00	-0.01
	0.00	29.86	0.00	0.00	0.00	0.16	0.07	0.01
4	21.15		0.04	0.01	0.04	0.00	0.00	0.00
	0.00	0.81E+06	0.04	0.01	0.04	0.00	0.00	0.00
	0.00	29.74	0.00	0.00	0.00	0.10	0.04	0.02

PROPULSIVE WING FORCE DATA

SUMMARY, RUN 415

PT	Q ALPHA BETA	REY NO WEIGHT	CL1S CNF1B CNWC	CD1S CAF1B CNWW	CPM1S CPM1B CNWT	CRM1S CRM1B CLTR	CYM1S CYM1B CDTR	CSF1S CSF1B CNTR
2	5.28		-0.02	0.02	0.04	0.00	0.00	-0.02
	-0.04	0.40E+06	-0.02	0.02	0.04	0.00	0.00	-0.02
	0.00	29.94	0.00	0.00	0.00	0.11	0.13	-0.02
3	10.48		0.02	0.02	0.04	0.00	0.00	0.00
	-0.02	0.57E+06	0.02	0.02	0.04	0.00	0.00	0.00
	0.00	29.94	0.00	0.00	0.00	0.13	0.08	0.01
4	21.15		0.03	0.02	0.04	0.00	0.00	0.00
	0.01	0.80E+06	0.03	0.02	0.04	0.00	0.00	0.02
	0.00	29.94	0.00	0.00	0.00	0.00	0.04	0.02

PROPULSIVE WING FORCE DATA

SUMMARY, RUN 416

PT	Q ALPHA BETA	REY NO WEIGHT	CL1S CNF1B CNWC	CD1S CAF1B CNWW	CPM1S CPM1B CNWT	CRM1S CRM1B CLTR	CYM1S CYM1B CDTR	CSF1S CSF1B CNTR
1	20.92		0.03	0.01	0.04	0.00	0.00	0.00
	-0.01	0.80E+06	0.03	0.01	0.04	0.00	0.00	0.00
	0.00	57.00	0.00	0.00	0.00	0.00	0.04	0.02
2	20.92		0.03	0.01	0.04	0.00	0.00	0.00
	-0.01	0.80E+06	0.03	0.01	0.04	0.00	0.00	0.00
	0.00	60.07	0.00	0.00	0.00	0.00	0.04	0.02
3	20.92		0.04	0.01	0.04	0.00	0.00	0.00
	-0.01	0.80E+06	0.04	0.01	0.04	0.00	0.00	0.00
	0.00	63.02	0.00	0.00	0.00	0.00	0.04	0.02
4	20.92		0.03	0.01	0.03	0.00	0.00	0.00
	-0.01	0.80E+06	0.03	0.01	0.03	0.00	0.00	0.00
	0.00	66.00	0.00	0.00	0.00	0.00	0.04	0.02
5	20.92		0.03	0.01	0.03	0.00	0.00	0.00
	-0.01	0.80E+06	0.03	0.01	0.03	0.00	0.00	0.00
	0.00	69.00	0.00	0.00	0.00	0.00	0.04	0.02
6	20.92		0.03	0.01	0.04	0.00	0.00	0.00
	-0.02	0.80E+06	0.03	0.01	0.04	0.00	0.00	0.00
	0.00	72.00	0.00	0.00	0.00	0.00	0.04	0.02
7	21.04		0.04	0.01	0.03	0.00	0.00	0.00
	-0.02	0.80E+06	0.04	0.01	0.03	0.00	0.00	0.00
	0.00	75.00	0.00	0.00	0.00	0.00	0.04	0.02
8	21.04		0.02	0.01	0.03	0.00	0.00	0.00
	-0.02	0.80E+06	0.02	0.01	0.03	0.00	0.00	0.00
	0.00	78.02	0.00	0.00	0.00	0.00	0.04	0.02
9	21.04		0.03	0.01	0.03	0.00	0.00	0.00
	-0.03	0.80E+06	0.03	0.01	0.03	0.00	0.00	0.00
	0.00	81.00	0.00	0.00	0.00	0.00	0.04	0.02
10	20.92		0.02	0.01	0.03	0.00	0.00	0.00
	-0.03	0.78E+06	0.02	0.01	0.03	0.00	0.00	0.00
	0.00	84.02	0.00	0.00	0.00	0.00	0.04	0.02
11	21.04		0.03	0.01	0.03	0.00	0.00	0.01
	-0.03	0.80E+06	0.03	0.01	0.03	0.00	0.00	0.01
	0.00	87.01	0.00	0.00	0.00	0.00	0.04	0.02

PROPULSIVE WING FORCE DATA

SUMMARY, RUN 417

PT	Q ALPHA BETA	REY NO HEIGHT	CL1S CNF1B CNUC	CD1S CAF1B CNUW	CPN1S CPN1B CNUT	CBN1S CBN1B CLTR	CYN1S CYN1B CDTR	CSF1S CSF1B CNTR
1	10.88		0.10	-0.28	0.08	0.00	-0.01	-0.01
	0.01	0.57E+06	0.10	-0.28	0.08	0.00	-0.01	-0.01
	0.00	57.00	0.39	0.00	0.39	0.05	0.02	0.08
2	10.58		0.12	-0.28	0.08	0.00	0.00	-0.01
	0.01	0.57E+06	0.12	-0.28	0.08	0.00	0.00	-0.01
	0.00	60.00	0.40	0.00	0.40	0.07	0.02	0.08
3	10.58		0.11	-0.28	0.08	0.00	0.00	0.00
	0.01	0.57E+06	0.11	-0.28	0.08	0.00	0.00	0.00
	0.00	63.51	0.40	0.00	0.40	0.06	0.02	0.08
4	10.58		0.10	-0.28	0.08	0.00	-0.01	-0.01
	0.00	0.57E+06	0.10	-0.28	0.08	0.00	-0.01	-0.01
	0.00	66.01	0.40	0.00	0.40	0.05	0.01	0.07
5	10.58		0.10	-0.28	0.08	0.00	-0.01	0.00
	0.00	0.57E+06	0.10	-0.28	0.08	0.00	-0.01	0.00
	0.00	69.01	0.40	0.00	0.40	0.05	0.02	0.07
6	10.58		0.10	-0.28	0.08	0.00	-0.02	0.00
	0.00	0.57E+06	0.10	-0.28	0.08	0.00	-0.02	0.00
	0.00	72.00	0.40	0.00	0.40	0.05	0.02	0.08
7	10.58		0.11	-0.28	0.08	0.00	-0.01	0.00
	0.00	0.57E+06	0.11	-0.28	0.08	0.00	-0.01	0.00
	0.00	75.00	0.40	0.00	0.40	0.06	0.02	0.07
8	10.58		0.10	-0.28	0.07	0.00	-0.01	0.00
	0.00	0.56E+06	0.10	-0.28	0.07	0.00	-0.01	0.00
	0.00	78.02	0.40	0.00	0.40	0.05	0.02	0.07
9	10.48		0.11	-0.28	0.07	0.00	-0.01	0.00
	0.00	0.56E+06	0.11	-0.28	0.07	0.00	-0.01	0.00
	0.00	81.00	0.41	0.00	0.41	0.06	0.02	0.07
10	10.48		0.10	-0.28	0.08	0.00	-0.01	0.01
	-0.01	0.56E+06	0.10	-0.28	0.08	0.00	-0.01	0.01
	0.00	84.01	0.41	0.00	0.41	0.05	0.02	0.07
11	10.48		0.11	-0.29	0.08	0.00	-0.01	0.01
	-0.01	0.56E+06	0.11	-0.29	0.08	0.00	-0.01	0.01
	0.00	87.00	0.41	0.00	0.41	0.06	0.02	0.07

PROPULSIVE WING FORCE DATA

SUMMARY, RUN 418

PT	Q ALPHA BETA	REY NO HEIGHT	CL1S CNF1B CNUC	CD1S CAF1B CNUW	CPN1S CPN1B CNUT	CBN1S CBN1B CLTR	CYN1S CYN1B CDTR	CSF1S CSF1B CNTR
1	5.17		0.14	-0.58	0.11	0.00	-0.01	-0.02
	-0.01	0.40E+06	0.14	-0.58	0.11	0.00	-0.01	-0.02
	0.00	57.00	0.82	0.00	0.82	0.03	0.03	0.10
2	5.29		0.13	-0.58	0.11	0.00	-0.01	0.00
	-0.01	0.40E+06	0.13	-0.58	0.11	0.00	-0.01	0.00
	0.00	60.00	0.80	0.00	0.80	0.03	0.03	0.10
3	5.29		0.15	-0.58	0.10	0.00	-0.01	0.00
	-0.02	0.40E+06	0.15	-0.58	0.10	0.00	-0.01	0.00
	0.00	63.00	0.81	0.00	0.81	0.05	0.03	0.09
4	5.29		0.16	-0.58	0.10	0.00	-0.01	-0.01
	-0.02	0.40E+06	0.16	-0.58	0.10	0.00	-0.01	-0.01
	0.00	66.00	0.80	0.00	0.80	0.06	0.02	0.08
5	5.29		0.14	-0.57	0.10	0.00	-0.02	0.01
	-0.02	0.40E+06	0.14	-0.57	0.10	0.00	-0.02	0.01
	0.00	69.01	0.80	0.00	0.80	0.04	0.03	0.09
6	5.29		0.12	-0.58	0.10	0.00	-0.01	-0.01
	-0.02	0.40E+06	0.12	-0.58	0.10	0.00	-0.01	-0.01
	0.00	72.00	0.80	0.00	0.80	0.02	0.02	0.08
7	5.29		0.13	-0.58	0.11	0.00	-0.02	0.00
	-0.03	0.40E+06	0.13	-0.58	0.11	0.00	-0.02	0.00
	0.00	75.02	0.80	0.00	0.80	0.03	0.03	0.10
8	5.29		0.11	-0.58	0.10	0.00	-0.01	0.00
	-0.01	0.40E+06	0.11	-0.58	0.10	0.00	-0.01	0.00
	0.00	78.00	0.80	0.00	0.80	0.01	0.03	0.10
9	5.29		0.12	-0.58	0.11	0.00	-0.02	0.01
	-0.03	0.40E+06	0.12	-0.58	0.11	0.00	-0.02	0.01
	0.00	81.00	0.80	0.00	0.80	0.02	0.02	0.10
10	5.29		0.11	-0.58	0.10	0.00	-0.02	-0.01
	-0.04	0.40E+06	0.11	-0.58	0.10	0.00	-0.02	-0.01
	0.00	84.00	0.80	0.00	0.80	0.02	0.02	0.10
11	5.29		0.12	-0.58	0.10	0.00	-0.01	0.00
	-0.04	0.40E+06	0.12	-0.58	0.10	0.00	-0.01	0.00
	0.00	87.01	0.80	0.00	0.80	0.02	0.02	0.10

PROPULSIVE WING FORCE DATA

SUMMARY, RUN 419

PT	Q ALPHA BETA	REY NO HEIGHT	CLIS CNFIB CNUC	CDIS CAFIB CNUW	CPMIS CPMIB CMUT	CRMIS CRMIB CLTR	CYMIS CYMIB CDTR	CSFIS CSFIB CMTR
2	5.29		0.06	0.01	0.03	0.01	0.02	0.03
	0.01	0.40E+06	0.06	0.01	0.03	0.01	0.02	0.03
	0.00	30.10	0.00	0.00	0.00	0.29	0.13	-0.03
3	10.46		0.05	0.01	0.04	0.01	0.01	0.01
	0.02	0.56E+06	0.05	0.01	0.04	0.01	0.01	0.01
	0.00	30.10	0.00	0.00	0.00	0.17	0.07	0.01
4	20.92		0.05	0.01	0.04	0.00	0.00	0.01
	0.06	0.79E+06	0.05	0.01	0.04	0.00	0.00	0.01
	0.06	30.10	0.00	0.00	0.00	0.10	0.04	0.02

PROPULSIVE WING FORCE DATA

SUMMARY, RUN 420

PT	Q ALPHA BETA	REY NO HEIGHT	CLIS CNFIB CNUC	CDIS CAFIB CNUW	CPMIS CPMIB CMUT	CRMIS CRMIB CLTR	CYMIS CYMIB CDTR	CSFIS CSFIB CMTR
1	21.15		0.04	0.01	0.04	0.00	0.00	0.01
	0.04	0.79E+06	0.04	0.01	0.04	0.00	0.00	0.01
	0.00	57.00	0.00	0.00	0.00	0.10	0.04	0.02
2	21.15		0.04	0.01	0.04	0.00	0.00	0.01
	0.04	0.79E+06	0.04	0.01	0.04	0.00	0.00	0.01
	0.00	60.00	0.00	0.00	0.00	0.10	0.04	0.02
3	21.15		0.04	0.01	0.04	0.00	0.00	0.01
	0.04	0.79E+06	0.04	0.01	0.04	0.00	0.00	0.01
	0.00	63.00	0.00	0.00	0.00	0.10	0.04	0.02
4	21.15		0.05	0.01	0.04	0.00	0.00	0.02
	0.04	0.79E+06	0.05	0.01	0.04	0.00	0.00	0.02
	0.00	66.00	0.00	0.00	0.00	0.10	0.04	0.02
5	21.15		0.05	0.01	0.04	0.00	0.00	0.01
	0.04	0.79E+06	0.05	0.01	0.04	0.00	0.00	0.01
	0.00	69.00	0.00	0.00	0.00	0.11	0.04	0.02
6	21.15		0.04	0.01	0.04	0.00	0.00	0.01
	0.04	0.79E+06	0.04	0.01	0.04	0.00	0.00	0.01
	0.00	72.01	0.00	0.00	0.00	0.10	0.04	0.02
7	21.04		0.04	0.01	0.04	0.00	0.00	0.01
	0.03	0.78E+06	0.04	0.01	0.04	0.00	0.00	0.01
	0.00	75.00	0.00	0.00	0.00	0.10	0.04	0.02
8	21.15		0.04	0.01	0.04	0.00	0.00	0.01
	0.03	0.79E+06	0.04	0.01	0.04	0.00	0.00	0.01
	0.00	78.01	0.00	0.00	0.00	0.10	0.04	0.02
9	21.15		0.04	0.01	0.04	0.00	0.00	0.01
	0.02	0.79E+06	0.04	0.01	0.04	0.00	0.00	0.01
	0.00	81.00	0.00	0.00	0.00	0.10	0.04	0.02
10	21.15		0.04	0.01	0.04	0.00	0.00	0.01
	0.02	0.79E+06	0.04	0.01	0.04	0.00	0.00	0.01
	0.00	84.00	0.00	0.00	0.00	0.10	0.04	0.02
11	21.04		0.03	0.01	0.03	0.00	0.00	0.01
	0.02	0.78E+06	0.03	0.01	0.03	0.00	0.00	0.01
	0.00	87.02	0.00	0.00	0.00	0.09	0.04	0.02

PROPULSIVE WING FORCE DATA

SUMMARY, RUN 421

PT	Q ALPHA BETA	REY NO HEIGHT	CL1S CNF1B CNUC	CD1S CAF1B CNUW	CPM1S CPM1B CMUT	CRM1S CRM1B CLTR	CYM1S CYM1B CDTR	CSF1S CSF1B CRTR
1	10.58		0.15	-0.28	0.08	0.01	0.00	0.01
	0.08	0.58E+06	0.15	-0.28	0.08	0.01	0.00	0.01
	0.00	57.02	0.40	0.00	0.40	0.00	0.02	0.07
2	10.48		0.15	-0.28	0.08	0.01	0.00	0.01
	0.06	0.55E+06	0.15	-0.28	0.08	0.01	0.00	0.01
	0.00	60.01	0.40	0.00	0.40	0.08	0.02	0.08
3	10.35		0.13	-0.28	0.08	0.01	0.00	0.02
	0.08	0.55E+06	0.13	-0.28	0.08	0.01	0.00	0.02
	0.00	63.00	0.40	0.00	0.40	0.08	0.02	0.07
4	10.48		0.14	-0.28	0.08	0.01	0.00	0.01
	0.05	0.55E+06	0.14	-0.28	0.08	0.01	0.00	0.01
	0.00	66.01	0.40	0.00	0.40	0.09	0.02	0.07
5	10.48		0.14	-0.28	0.08	0.01	0.00	0.01
	0.05	0.55E+06	0.14	-0.28	0.08	0.01	0.00	0.01
	0.00	69.01	0.40	0.00	0.40	0.09	0.02	0.08
6	10.48		0.13	-0.28	0.08	0.01	0.00	0.01
	0.05	0.55E+06	0.13	-0.28	0.08	0.01	0.00	0.01
	0.00	72.01	0.40	0.00	0.40	0.08	0.02	0.08
7	10.48		0.13	-0.28	0.08	0.01	0.00	0.02
	0.05	0.55E+06	0.13	-0.28	0.08	0.01	0.00	0.02
	0.00	75.00	0.40	0.00	0.40	0.08	0.02	0.08
8	10.48		0.14	-0.28	0.08	0.01	0.00	0.01
	0.05	0.55E+06	0.13	-0.28	0.08	0.01	0.00	0.01
	0.00	78.01	0.40	0.00	0.40	0.08	0.02	0.08
9	10.48		0.13	-0.28	0.08	0.01	0.00	0.03
	0.05	0.55E+06	0.13	-0.28	0.08	0.01	0.00	0.03
	0.00	81.00	0.40	0.00	0.40	0.08	0.02	0.07
10	10.48		0.13	-0.28	0.09	0.01	0.00	0.02
	0.01	0.55E+06	0.13	-0.28	0.09	0.01	0.00	0.02
	0.00	84.01	0.40	0.00	0.40	0.08	0.02	0.08
11	10.58		0.12	-0.28	0.08	0.01	0.00	0.01
	0.04	0.58E+06	0.12	-0.28	0.08	0.01	0.00	0.01
	0.00	87.00	0.40	0.00	0.40	0.07	0.02	0.08

PROPULSIVE WING FORCE DATA

SUMMARY, RUN 422

PT	Q ALPHA BETA	REY NO HEIGHT	CL1S CNF1B CNUC	CD1S CAF1B CNUW	CPM1S CPM1B CMUT	CRM1S CRM1B CLTR	CYM1S CYM1B CDTR	CSF1S CSF1B CRTR
1	5.29		0.18	-0.57	0.11	0.01	0.01	0.01
	0.03	0.39E+06	0.18	-0.57	0.11	0.01	0.01	0.01
	0.00	57.00	0.80	0.00	0.80	0.08	0.03	0.10
2	5.17		0.19	-0.58	0.10	0.01	0.01	0.01
	0.03	0.39E+06	0.19	-0.58	0.10	0.01	0.01	0.01
	0.00	60.00	0.81	0.00	0.81	0.08	0.02	0.08
3	5.29		0.17	-0.57	0.11	0.01	0.01	0.04
	0.03	0.39E+06	0.17	-0.57	0.11	0.01	0.01	0.04
	0.00	63.00	0.80	0.00	0.80	0.07	0.03	0.10
4	5.29		0.15	-0.58	0.11	0.01	0.01	0.01
	0.03	0.40E+06	0.15	-0.58	0.11	0.01	0.01	0.01
	0.00	66.00	0.80	0.00	0.80	0.05	0.02	0.10
5	5.29		0.14	-0.57	0.11	0.01	0.01	0.01
	0.03	0.39E+06	0.14	-0.57	0.11	0.01	0.01	0.01
	0.00	69.00	0.80	0.00	0.80	0.04	0.03	0.10
6	5.29		0.21	-0.57	0.12	0.01	0.01	0.02
	0.02	0.39E+06	0.21	-0.57	0.12	0.01	0.01	0.02
	0.00	72.00	0.80	0.00	0.80	0.11	0.03	0.11
7	5.29		0.14	-0.58	0.10	0.01	0.01	0.01
	0.02	0.40E+06	0.14	-0.58	0.10	0.01	0.01	0.01
	0.00	75.00	0.80	0.00	0.80	0.05	0.02	0.09
8	5.29		0.18	-0.58	0.11	0.01	0.01	0.01
	0.02	0.39E+06	0.18	-0.58	0.11	0.01	0.01	0.01
	0.00	78.01	0.80	0.00	0.80	0.08	0.02	0.10
9	5.29		0.18	-0.58	0.11	0.01	0.01	0.02
	0.02	0.39E+06	0.18	-0.58	0.11	0.01	0.01	0.02
	0.00	81.00	0.80	0.00	0.80	0.08	0.02	0.10
10	5.17		0.14	-0.80	0.12	0.01	0.02	-0.01
	0.01	0.39E+06	0.14	-0.80	0.12	0.01	0.02	-0.01
	0.00	84.01	0.82	0.00	0.82	0.04	0.02	0.11
11	5.29		0.15	-0.58	0.11	0.01	0.01	0.02
	0.01	0.39E+06	0.15	-0.58	0.11	0.01	0.01	0.02
	0.00	87.00	0.81	0.00	0.81	0.05	0.03	0.10

PROPULSIVE WING FORCE DATA

SUMMARY, RUN 423

PT	Q ALPHA BETA	REY NO HEIGHT	CL1S CNF1B CNUC	CD1S CAF1B CNUW	CPM1S CPM1B CNUT	CRM1S CRM1B CLTR	CYM1S CYM1B CDTR	CSF1S CSF1B CNTR
2	5.2°		0.04	0.01	0.04	0.00	0.00	-0.03
	-0.01	0.39E+06	0.04	0.01	0.04	0.00	0.00	-0.03
	0.00	30.00	0.00	0.00	0.00	0.27	0.12	-0.02
3	10.58		0.03	0.01	0.04	0.00	0.00	-0.01
	0.01	0.55E+06	0.03	0.01	0.04	0.00	0.00	-0.01
	0.00	30.00	0.00	0.00	0.00	0.15	0.07	0.01
4	21.04		0.04	0.01	0.04	0.00	0.00	0.00
	0.04	0.78E+06	0.04	0.01	0.04	0.00	0.00	0.00
	0.00	30.00	0.00	0.00	0.00	0.10	0.04	0.03

PROPULSIVE WING FORCE DATA

SUMMARY, RUN 424

PT	Q ALPHA BETA	REY NO HEIGHT	CL1S CNF1B CNUC	CD1S CAF1B CNUW	CPM1S CPM1B CNUT	CRM1S CRM1B CLTR	CYM1S CYM1B CDTR	CSF1S CSF1B CNTR
1	20.92		0.04	0.01	0.04	0.00	-0.01	0.00
	0.03	0.77E+06	0.04	0.01	0.04	0.00	-0.01	0.00
	0.00	57.01	0.00	0.00	0.00	0.08	0.04	0.02
2	20.92		0.04	0.01	0.04	0.00	-0.01	0.00
	0.03	0.77E+06	0.04	0.01	0.04	0.00	-0.01	0.00
	0.00	58.01	0.00	0.00	0.00	0.10	0.04	0.02
3	20.92		0.03	0.01	0.04	0.00	-0.01	0.00
	0.03	0.77E+06	0.03	0.01	0.04	0.00	-0.01	0.00
	0.00	63.01	0.00	0.00	0.00	0.08	0.04	0.02
4	20.92		0.03	0.01	0.04	0.00	-0.01	0.00
	0.03	0.77E+06	0.03	0.01	0.04	0.00	-0.01	0.00
	0.00	68.00	0.00	0.00	0.00	0.08	0.04	0.02
5	20.92		0.04	0.01	0.04	0.00	-0.01	0.00
	0.03	0.77E+06	0.04	0.01	0.04	0.00	-0.01	0.00
	0.00	69.00	0.00	0.00	0.00	0.08	0.04	0.03
6	20.92		0.03	0.01	0.04	0.00	0.00	0.00
	0.03	0.77E+06	0.03	0.01	0.04	0.00	0.00	0.00
	0.00	72.00	0.00	0.00	0.00	0.08	0.04	0.02
7	20.92		0.03	0.01	0.04	0.00	0.00	0.00
	0.02	0.77E+06	0.03	0.01	0.04	0.00	0.00	0.00
	0.00	74.01	0.00	0.00	0.00	0.08	0.04	0.02
8	20.92		0.04	0.01	0.04	0.00	0.00	0.00
	0.02	0.77E+06	0.04	0.01	0.04	0.00	0.00	0.00
	0.00	78.00	0.00	0.00	0.00	0.10	0.04	0.02
9	21.04		0.03	0.01	0.04	0.00	0.00	0.00
	0.02	0.77E+06	0.03	0.01	0.04	0.00	0.00	0.00
	0.00	81.00	0.00	0.00	0.00	0.08	0.04	0.02
10	21.04		0.03	0.01	0.04	0.00	0.00	0.00
	0.01	0.77E+06	0.03	0.01	0.04	0.00	0.00	0.00
	0.00	84.00	0.00	0.00	0.00	0.08	0.04	0.02
11	21.15		0.03	0.01	0.04	0.00	0.00	0.00
	0.01	0.78E+06	0.03	0.01	0.04	0.00	0.00	0.00
	0.00	87.01	0.00	0.00	0.00	0.08	0.04	0.02

PROPULSIVE WING FORCE DATA

SUMMARY, RUN 425

PT	Q ALPHA BETA	REY NO WEIGHT	CL1S CNF1B CNUC	CD1S CAF1B CNUM	CPM1S CPM1B CNUT	CRM1S CRM1B CLTR	CYM1S CYM1B CDTR	CSF1S CSF1B CNTR
1	10.81		0.11	-0.27	0.08	0.00	-0.01	-0.01
	0.05	0.58E+06	0.11	-0.27	0.08	0.00	-0.01	-0.01
	0.00	57.01	0.39	0.00	0.39	0.06	0.02	0.07
2	10.58		0.11	-0.28	0.08	0.00	-0.01	0.00
	-0.03	0.55E+06	0.11	-0.28	0.08	0.00	-0.01	0.00
	0.00	60.00	0.40	0.00	0.40	0.08	0.02	0.08
3	10.58		0.11	-0.28	0.08	0.00	-0.01	0.00
	-0.03	0.55E+06	0.11	-0.28	0.08	0.00	-0.01	0.00
	0.00	63.00	0.39	0.00	0.39	0.06	0.02	0.08
4	10.58		0.12	-0.28	0.08	0.00	-0.01	0.00
	-0.03	0.55E+06	0.12	-0.28	0.08	0.00	-0.01	0.00
	0.00	66.01	0.40	0.00	0.40	0.07	0.02	0.08
5	10.46		0.13	-0.28	0.08	0.00	-0.01	0.00
	-0.03	0.55E+06	0.13	-0.28	0.08	0.00	-0.01	0.00
	0.00	69.01	0.40	0.00	0.40	0.08	0.02	0.07
6	10.46		0.13	-0.28	0.08	0.00	-0.01	0.00
	-0.03	0.55E+06	0.13	-0.28	0.08	0.00	-0.01	0.00
	0.00	72.01	0.40	0.00	0.40	0.08	0.02	0.08
7	10.46		0.12	-0.28	0.09	0.00	-0.01	-0.01
	-0.04	0.55E+06	0.12	-0.28	0.09	0.00	-0.01	-0.01
	0.00	75.00	0.40	0.00	0.40	0.07	0.02	0.08
8	10.46		0.10	-0.28	0.08	0.00	-0.01	0.00
	-0.04	0.55E+06	0.10	-0.28	0.08	0.00	-0.01	0.00
	0.00	78.00	0.40	0.00	0.40	0.05	0.02	0.08
9	10.46		0.11	-0.29	0.08	0.00	-0.01	0.00
	-0.04	0.55E+06	0.11	-0.29	0.08	0.00	-0.01	0.00
	0.00	81.00	0.40	0.00	0.40	0.06	0.02	0.07
10	10.46		0.11	-0.29	0.08	0.00	-0.01	0.00
	-0.05	0.55E+06	0.11	-0.29	0.08	0.00	-0.01	0.00
	0.00	84.00	0.40	0.00	0.40	0.06	0.02	0.08
11	10.46		0.12	-0.29	0.08	0.00	-0.01	0.00
	-0.05	0.55E+06	0.12	-0.29	0.08	0.00	-0.01	0.00
	0.00	87.00	0.41	0.00	0.41	0.07	0.02	0.07

PROPULSIVE WING FORCE DATA

SUMMARY, RUN 426

PT	Q ALPHA BETA	REY NO WEIGHT	CL1S CNF1B CNUC	CD1S CAF1B CNUM	CPM1S CPM1B CNUT	CRM1S CRM1B CLTR	CYM1S CYM1B CDTR	CSF1S CSF1B CNTR
1	5.17		0.18	-0.58	0.11	0.00	-0.01	-0.01
	-0.05	0.38E+06	0.18	-0.58	0.11	0.00	-0.01	-0.01
	0.00	57.00	0.82	0.00	0.82	0.06	0.02	0.10
2	5.28		0.15	-0.58	0.11	0.00	-0.01	-0.01
	-0.06	0.39E+06	0.15	-0.58	0.11	0.00	-0.01	-0.01
	0.00	60.01	0.80	0.00	0.80	0.05	0.02	0.10
3	5.28		0.14	-0.58	0.11	0.00	-0.01	-0.02
	-0.06	0.39E+06	0.14	-0.58	0.11	0.00	-0.01	-0.02
	0.00	63.01	0.80	0.00	0.80	0.04	0.02	0.10
4	5.28		0.18	-0.58	0.10	0.00	-0.01	-0.01
	-0.06	0.39E+06	0.18	-0.58	0.10	0.00	-0.01	-0.01
	0.00	66.01	0.78	0.00	0.78	0.05	0.02	0.10
5	5.28		0.11	-0.57	0.11	0.00	-0.01	0.00
	-0.06	0.39E+06	0.11	-0.57	0.11	0.00	-0.01	0.00
	0.00	69.00	0.78	0.00	0.78	0.01	0.07	0.10
6	5.28		0.13	-0.58	0.09	0.00	-0.01	-0.01
	-0.07	0.39E+06	0.13	-0.58	0.08	0.00	-0.01	-0.01
	0.00	72.01	0.80	0.00	0.80	0.03	0.02	0.09
7	5.28		0.18	-0.57	0.12	0.00	-0.01	0.00
	-0.07	0.39E+06	0.18	-0.57	0.12	0.00	-0.01	0.00
	0.00	75.06	0.78	0.00	0.78	0.06	0.02	0.11
8	5.29		0.15	-0.58	0.11	0.00	-0.01	0.00
	-0.07	0.39E+06	0.15	-0.58	0.11	0.00	-0.01	0.00
	0.00	78.00	0.78	0.00	0.78	0.05	0.02	0.10
9	5.29		0.15	-0.58	0.10	0.00	-0.01	-0.02
	-0.07	0.39E+06	0.15	-0.58	0.10	0.00	-0.01	-0.02
	0.00	81.00	0.78	0.00	0.78	0.05	0.02	0.10
10	5.29		0.15	-0.58	0.11	0.00	-0.01	0.00
	-0.08	0.39E+06	0.15	-0.58	0.11	0.00	-0.01	0.00
	0.00	84.01	0.80	0.00	0.80	0.05	0.02	0.10
11	5.29		0.12	-0.58	0.11	0.00	-0.01	-0.02
	-0.08	0.39E+06	0.12	-0.58	0.11	0.00	-0.01	-0.02
	0.00	87.00	0.78	0.00	0.78	0.02	0.02	0.10

PROPULSIVE WING FORCE DATA

SUMMARY, RUN 427

PT	Q ALPHA BETA	REY NO HEIGHT	CL1S CNF1B CNUC	CD1S CAF1B CNUW	CPM1S CPM1B CNUT	CRM1S CRM1B CLTR	CYM1S CYM1B CDTR	CSF1S CSF1B CNTR
2	5.29		0.08	0.02	0.03	0.00	-0.01	0.01
	0.03	0.39E+06	0.08	0.02	0.03	0.00	-0.01	0.01
	0.00	30.00	0.00	0.00	0.00	0.31	0.13	-0.03
3	10.56		0.05	0.01	0.04	0.00	-0.01	0.01
	0.00	0.55E+06	0.05	0.01	0.04	0.00	-0.01	0.01
	0.00	30.01	0.00	0.00	0.00	0.17	0.07	0.01
4	21.04		0.06	0.01	0.03	0.00	0.00	0.00
	0.03	0.77E+06	0.06	0.01	0.03	0.00	0.00	0.00
	0.00	30.01	0.00	0.00	0.00	0.11	0.04	0.02

PROPULSIVE WING FORCE DATA

SUMMARY, RUN 428

PT	Q ALPHA BETA	REY NO HEIGHT	CL1S CNF1B CNUC	CD1S CAF1B CNUW	CPM1S CPM1B CNUT	CRM1S CRM1B CLTR	CYM1S CYM1B CDTR	CSF1S CSF1B CNTR
1	21.15		0.05	0.01	0.03	0.00	-0.01	0.01
	-0.02	0.77E+06	0.05	0.01	0.03	0.00	-0.01	0.01
	0.00	56.86	0.00	0.00	0.00	0.10	0.04	0.02
2	21.04		0.05	0.01	0.03	0.00	-0.01	0.01
	-0.02	0.77E+06	0.05	0.01	0.03	0.00	-0.01	0.01
	0.00	60.01	0.00	0.00	0.00	0.11	0.04	0.02
3	21.15		0.05	0.01	0.03	0.00	-0.01	0.02
	-0.02	0.77E+06	0.05	0.01	0.03	0.00	-0.01	0.02
	0.00	63.00	0.00	0.00	0.00	0.11	0.04	0.02
4	21.15		0.05	0.01	0.03	0.00	-0.01	0.01
	-0.02	0.77E+06	0.05	0.01	0.03	0.00	-0.01	0.01
	0.00	66.00	0.00	0.00	0.00	0.11	0.04	0.02
5	21.15		0.05	0.01	0.03	0.00	-0.01	0.01
	-0.02	0.77E+06	0.05	0.01	0.03	0.00	-0.01	0.01
	0.00	69.00	0.00	0.00	0.00	0.11	0.04	0.02
6	21.04		0.05	0.01	0.03	0.00	-0.01	0.01
	-0.02	0.77E+06	0.05	0.01	0.03	0.00	-0.01	0.01
	0.00	72.01	0.00	0.00	0.00	0.11	0.04	0.02
7	21.15		0.05	0.01	0.03	0.00	-0.01	0.01
	-0.02	0.77E+06	0.05	0.01	0.03	0.00	-0.01	0.01
	0.00	75.00	0.00	0.00	0.00	0.11	0.04	0.02
8	21.15		0.05	0.01	0.03	0.00	0.00	0.01
	-0.03	0.77E+06	0.05	0.01	0.03	0.00	0.00	0.01
	0.00	78.01	0.00	0.00	0.00	0.10	0.04	0.02
9	21.04		0.05	0.01	0.03	0.00	0.00	0.01
	-0.03	0.77E+06	0.05	0.01	0.03	0.00	0.00	0.01
	0.00	81.00	0.00	0.00	0.00	0.11	0.04	0.02
10	21.04		0.05	0.01	0.03	0.00	0.00	0.01
	-0.04	0.77E+06	0.05	0.01	0.03	0.00	0.00	0.01
	0.00	84.00	0.00	0.00	0.00	0.11	0.04	0.02
11	21.04		0.04	0.01	0.03	0.00	0.00	0.01
	-0.04	0.77E+06	0.04	0.01	0.03	0.00	0.00	0.01
	0.00	87.01	0.00	0.00	0.00	0.10	0.04	0.02

PROPULSIVE WING FORCE DATA

SUMMARY, RUN 429

PT	Q ALPHA BETA	REY NO HEIGHT	CL1S CNF1B CNUC	CD1S CAF1B CNUM	CPM1S CPM1B CMUT	CRM1S CRM1B CLTR	CYM1S CYM1B CDTR	CSF1S CSF1B CNTR
1	10.68		0.14	-0.28	0.07	0.00	-0.01	0.01
	0.00	0.55E+06	0.14	-0.28	0.07	0.00	-0.01	0.01
	0.00	57.01	0.40	0.00	0.40	0.08	0.01	0.07
2	10.58		0.15	-0.28	0.07	0.00	-0.01	0.02
	0.00	0.55E+06	0.15	-0.28	0.07	0.00	-0.01	0.02
	0.00	60.00	0.40	0.00	0.40	0.10	0.02	0.07
3	10.58		0.15	-0.28	0.07	0.00	-0.01	0.02
	0.00	0.55E+06	0.15	-0.28	0.07	0.00	-0.01	0.02
	0.00	63.02	0.40	0.00	0.40	0.10	0.02	0.07
4	10.48		0.13	-0.29	0.07	0.00	-0.01	0.02
	0.00	0.55E+06	0.13	-0.29	0.07	0.00	-0.01	0.02
	0.00	68.03	0.41	0.00	0.41	0.08	0.02	0.06
5	10.58		0.14	-0.28	0.08	0.00	-0.01	0.02
	0.00	0.55E+06	0.14	-0.28	0.08	0.00	-0.01	0.02
	0.00	69.02	0.40	0.00	0.40	0.09	0.02	0.07
6	10.58		0.15	-0.28	0.07	0.00	-0.01	0.02
	0.00	0.55E+06	0.15	-0.28	0.07	0.00	-0.01	0.02
	0.00	72.03	0.40	0.00	0.40	0.10	0.02	0.07
7	10.58		0.15	-0.28	0.07	0.00	-0.01	0.02
	-0.01	0.55E+06	0.15	-0.28	0.07	0.00	-0.01	0.02
	0.00	75.02	0.40	0.00	0.40	0.10	0.02	0.07
8	10.58		0.14	-0.28	0.07	0.00	-0.01	0.02
	-0.01	0.55E+06	0.14	-0.28	0.07	0.00	-0.01	0.02
	0.00	78.01	0.40	0.00	0.40	0.09	0.02	0.07
9	10.58		0.15	-0.29	0.07	0.00	-0.01	0.01
	-0.01	0.55E+06	0.15	-0.29	0.07	0.00	-0.01	0.01
	0.00	81.06	0.40	0.00	0.40	0.10	0.02	0.07
10	10.48		0.15	-0.29	0.07	0.00	-0.01	0.01
	-0.02	0.55E+06	0.15	-0.29	0.07	0.00	-0.01	0.01
	0.00	84.05	0.41	0.00	0.41	0.10	0.02	0.07
11	10.46		0.15	-0.28	0.07	0.00	-0.01	0.01
	-0.02	0.55E+06	0.15	-0.29	0.07	0.00	-0.01	0.01
	0.00	87.00	0.41	0.00	0.41	0.10	0.02	0.07

PROPULSIVE WING FORCE DATA

SUMMARY, RUN 430

PT	Q ALPHA BETA	REY NO HEIGHT	CL1S CNF1B CNUC	CD1S CAF1B CNUM	CPM1S CPM1B CMUT	CRM1S CRM1B CLTR	CYM1S CYM1B CDTR	CSF1S CSF1B CNTR
1	5.29		0.23	-0.58	0.09	0.00	-0.02	0.03
	-0.02	0.39E+06	0.23	-0.58	0.09	0.00	-0.02	0.03
	0.00	57.07	0.81	0.00	0.81	0.13	0.02	0.06
2	5.29		0.23	-0.58	0.08	0.00	-0.01	0.02
	-0.03	0.39E+06	0.23	-0.58	0.08	0.00	-0.01	0.02
	0.00	60.01	0.81	0.00	0.81	0.13	0.02	0.07
3	5.29		0.22	-0.58	0.10	0.00	-0.01	0.02
	-0.03	0.39E+06	0.23	-0.58	0.10	0.00	-0.01	0.02
	0.00	63.00	0.81	0.00	0.81	0.13	0.02	0.06
4	5.29		0.22	-0.58	0.08	0.00	-0.01	0.01
	-0.03	0.39E+06	0.22	-0.58	0.08	0.00	-0.01	0.01
	0.00	66.01	0.81	0.00	0.81	0.12	0.02	0.06
5	5.29		0.19	-0.58	0.08	0.00	-0.01	0.02
	-0.03	0.39E+06	0.19	-0.58	0.08	0.00	-0.01	0.02
	0.00	69.01	0.81	0.00	0.81	0.10	0.02	0.06
6	5.29		0.21	-0.58	0.10	0.00	-0.01	0.03
	-0.03	0.39E+06	0.21	-0.58	0.10	0.00	-0.01	0.03
	0.00	72.01	0.81	0.00	0.81	0.12	0.02	0.06
7	5.29		0.22	-0.58	0.08	0.00	-0.01	0.02
	-0.03	0.39E+06	0.22	-0.58	0.08	0.00	-0.01	0.02
	0.00	75.22	0.81	0.00	0.81	0.12	0.02	0.06
8	5.29		0.20	-0.60	0.10	0.00	-0.01	0.02
	-0.04	0.39E+06	0.20	-0.60	0.10	0.00	-0.01	0.02
	0.00	78.00	0.81	0.00	0.81	0.10	0.01	0.06
9	5.17		0.20	-0.61	0.08	0.00	-0.01	0.03
	0.01	0.39E+06	0.20	-0.61	0.08	0.00	-0.01	0.03
	0.00	81.02	0.83	0.00	0.83	0.11	0.02	0.07
10	5.29		0.22	-0.60	0.08	0.00	-0.01	0.02
	0.00	0.39E+06	0.22	-0.60	0.08	0.00	-0.01	0.02
	0.00	84.11	0.81	0.00	0.81	0.12	0.01	0.06
11	5.29		0.21	-0.58	0.08	0.00	-0.01	0.04
	0.00	0.39E+06	0.21	-0.58	0.09	0.00	-0.01	0.04
	0.00	87.01	0.81	0.00	0.81	0.12	0.02	0.06

PROPULSIVE WING FORCE DATA

SUMMARY, RUN 431

PT	Q ALPHA BETA	REY NO HEIGHT	CL1S CNF1B CNUC	CD1S CAF1B CNUW	CPN1S CPN1B CNUT	CRM1S CRM1B CLTR	CYN1S CYN1B CDTR	CSF1S CSF1B CNTR
2	5.29		0.02	0.02	0.04	0.00	-0.01	0.01
	0.00	0.39E+06	0.02	0.02	0.04	0.00	-0.01	0.01
	0.00	35.08	0.00	0.00	0.00	0.25	0.13	-0.02
3	10.35		0.03	0.01	0.04	0.00	-0.01	0.00
	0.01	0.55E+06	0.03	0.01	0.04	0.00	-0.01	0.00
	0.00	35.08	0.00	0.00	0.00	0.15	0.07	0.01
4	21.04		0.04	0.01	0.04	0.00	0.00	0.00
	0.04	0.77E+06	0.04	0.01	0.04	0.00	0.00	0.00
	0.00	35.08	0.00	0.00	0.00	0.10	0.04	0.02

PROPULSIVE WING FORCE DATA

SUMMARY, RUN 432

PT	Q ALPHA BETA	REY NO HEIGHT	CL1S CNF1B CNUC	CD1S CAF1B CNUW	CPN1S CPN1B CNUT	CRM1S CRM1B CLTR	CYN1S CYN1B CDTR	CSF1S CSF1B CNTR
1	21.27		0.04	0.01	0.04	0.00	-0.01	0.01
	0.04	0.78E+06	0.04	0.01	0.04	0.00	-0.01	0.01
	0.00	57.05	0.00	0.00	0.00	0.10	0.04	0.02
2	21.04		0.04	0.01	0.04	0.00	-0.01	0.01
	0.01	0.78E+06	0.04	0.01	0.04	0.00	-0.01	0.01
	0.00	60.02	0.00	0.00	0.00	0.10	0.04	0.02
3	21.15		0.04	0.01	0.04	0.00	-0.01	0.01
	0.01	0.78E+06	0.04	0.01	0.04	0.00	-0.01	0.01
	0.00	63.00	0.00	0.00	0.00	0.09	0.04	0.02
4	21.04		0.04	0.01	0.04	0.00	-0.01	0.01
	0.01	0.78E+06	0.04	0.01	0.04	0.00	-0.01	0.01
	0.00	66.01	0.00	0.00	0.00	0.10	0.04	0.02
5	21.04		0.03	0.01	0.04	0.00	-0.01	0.01
	0.01	0.78E+06	0.03	0.01	0.04	0.00	-0.01	0.01
	0.00	69.38	0.00	0.00	0.00	0.09	0.04	0.02
6	21.15		0.04	0.01	0.04	0.00	0.00	0.00
	0.00	0.78E+06	0.04	0.01	0.04	0.00	0.00	0.00
	0.00	72.00	0.00	0.00	0.00	0.10	0.04	0.02
7	21.04		0.03	0.01	0.04	0.00	0.00	0.01
	0.00	0.78E+06	0.03	0.01	0.04	0.00	0.00	0.01
	0.00	75.03	0.00	0.00	0.00	0.09	0.04	0.02
8	21.15		0.04	0.01	0.04	0.00	0.00	0.01
	0.00	0.78E+06	0.04	0.01	0.04	0.00	0.00	0.01
	0.00	78.10	0.00	0.00	0.00	0.10	0.04	0.02
9	20.92		0.04	0.01	0.04	0.00	0.00	0.00
	-0.01	0.77E+06	0.04	0.01	0.04	0.00	0.00	0.00
	0.00	81.02	0.00	0.00	0.00	0.09	0.04	0.02
10	21.04		0.03	0.01	0.03	0.00	0.00	0.00
	-0.01	0.78E+06	0.03	0.01	0.03	0.00	0.00	0.00
	0.00	84.08	0.00	0.00	0.00	0.09	0.04	0.02
11	21.04		0.04	0.01	0.03	0.00	0.00	0.01
	-0.01	0.78E+06	0.04	0.01	0.03	0.00	0.00	0.01
	0.00	87.01	0.00	0.00	0.00	0.10	0.04	0.02

PROPULSIVE WING FORCE DATA

SUMMARY, RUN 433

PT	Q ALPHA BETA	REY NO HEIGHT	CL1S CNF1B CNUC	CD1S CAF1B CNWW	CPM1S CPM1B CNUT	CBM1S CBM1B CLTR	CYM1S CYM1B CDTR	CSF1S CSF1B CNTR
1	10.58		0.13	-0.29	0.08	0.00	-0.01	0.00
	0.02	0.55E+06	0.13	-0.29	0.08	0.00	-0.01	0.00
	0.00	57.04	0.40	0.00	0.40	0.08	0.01	0.07
2	10.58		0.12	-0.29	0.08	0.00	-0.01	0.00
	0.02	0.55E+06	0.12	-0.29	0.08	0.00	-0.01	0.00
	0.00	60.00	0.40	0.00	0.40	0.07	0.01	0.07
3	10.88		0.14	-0.29	0.08	0.00	-0.01	0.00
	0.02	0.58E+06	0.14	-0.29	0.08	0.00	-0.01	0.00
	0.00	63.01	0.40	0.00	0.40	0.08	0.01	0.07
4	10.88		0.13	-0.28	0.08	0.00	-0.01	0.01
	0.03	0.58E+06	0.13	-0.28	0.08	0.00	-0.01	0.01
	0.00	65.01	0.40	0.00	0.40	0.08	0.01	0.07
5	10.88		0.13	-0.28	0.08	0.00	-0.01	0.02
	0.03	0.58E+06	0.13	-0.28	0.08	0.00	-0.01	0.02
	0.00	68.03	0.40	0.00	0.40	0.08	0.01	0.07
6	10.35		0.13	-0.30	0.08	0.00	-0.01	0.00
	0.02	0.55E+06	0.13	-0.30	0.08	0.00	-0.01	0.00
	0.00	72.03	0.41	0.00	0.41	0.08	0.01	0.07
7	10.35		0.13	-0.30	0.08	0.00	-0.01	0.00
	0.02	0.55E+06	0.13	-0.30	0.08	0.00	-0.01	0.00
	0.00	75.00	0.41	0.00	0.41	0.08	0.01	0.07
8	10.35		0.14	-0.30	0.08	0.00	-0.01	0.00
	0.02	0.55E+06	0.14	-0.30	0.08	0.00	-0.01	0.00
	0.00	78.00	0.41	0.00	0.41	0.08	0.01	0.07
9	10.58		0.13	-0.29	0.08	0.00	-0.01	0.00
	0.01	0.55E+06	0.13	-0.29	0.08	0.00	-0.01	0.00
	0.00	81.03	0.40	0.00	0.40	0.08	0.01	0.07
10	10.88		0.12	-0.29	0.08	0.00	-0.01	0.01
	0.01	0.58E+06	0.12	-0.29	0.08	0.00	-0.01	0.01
	0.00	84.08	0.40	0.00	0.40	0.08	0.01	0.07
11	10.58		0.12	-0.29	0.08	0.00	-0.01	0.01
	0.01	0.55E+06	0.12	-0.29	0.08	0.00	-0.01	0.01
	0.00	87.00	0.40	0.00	0.40	0.07	0.01	0.07

PROPULSIVE WING FORCE DATA

SUMMARY, RUN 434

PT	Q ALPHA BETA	REY NO HEIGHT	CL1S CNF1B CNUC	CD1S CAF1B CNWW	CPM1S CPM1B CNUT	CBM1S CBM1B CLTR	CYM1S CYM1B CDTR	CSF1S CSF1B CNTR
1	5.29		0.18	-0.00	0.10	0.00	-0.01	0.00
	0.00	0.39E+06	0.18	-0.00	0.10	0.00	-0.01	0.00
	0.00	57.02	0.81	0.00	0.81	0.08	0.01	0.00
2	5.17		0.16	-0.02	0.10	0.00	-0.01	0.00
	0.00	0.39E+06	0.16	-0.02	0.10	0.00	-0.01	0.00
	0.00	60.01	0.82	0.00	0.82	0.08	0.01	0.00
3	5.40		0.19	-0.58	0.10	0.00	-0.01	0.02
	0.00	0.40E+06	0.19	-0.58	0.10	0.00	-0.01	0.02
	0.00	63.04	0.79	0.00	0.79	0.10	0.01	0.00
4	5.29		0.18	-0.81	0.10	0.00	-0.01	0.02
	0.00	0.39E+06	0.18	-0.81	0.10	0.00	-0.01	0.02
	0.00	66.01	0.81	0.00	0.81	0.08	0.00	0.00
5	5.29		0.18	-0.81	0.10	0.00	-0.01	0.01
	-0.01	0.39E+06	0.18	-0.81	0.10	0.00	-0.01	0.01
	0.00	69.01	0.81	0.00	0.81	0.08	0.00	0.00
6	5.29		0.18	-0.81	0.10	0.00	-0.01	0.02
	-0.01	0.39E+06	0.18	-0.81	0.10	0.00	-0.01	0.02
	0.00	72.01	0.81	0.00	0.81	0.08	0.00	0.00
7	5.29		0.18	-0.81	0.10	0.00	-0.02	0.01
	-0.01	0.39E+06	0.16	-0.81	0.10	0.00	-0.02	0.01
	0.00	75.00	0.81	0.00	0.81	0.08	0.00	0.00
8	5.29		0.19	-0.81	0.00	0.00	-0.01	0.01
	-0.01	0.39E+06	0.19	-0.81	0.00	0.00	-0.01	0.01
	0.00	78.01	0.82	0.00	0.82	0.10	0.00	0.00
9	5.29		0.19	-0.81	0.10	0.00	-0.01	0.00
	-0.02	0.39E+06	0.19	-0.81	0.10	0.00	-0.01	0.00
	0.00	81.04	0.82	0.00	0.82	0.10	0.00	0.00
10	5.29		0.19	-0.81	0.00	0.00	-0.01	0.01
	-0.02	0.39E+06	0.19	-0.81	0.00	0.00	-0.01	0.01
	0.00	84.03	0.82	0.00	0.82	0.10	0.00	0.00
11	5.29		0.18	-0.81	0.00	0.00	-0.01	0.01
	-0.02	0.39E+06	0.18	-0.81	0.00	0.00	-0.01	0.01
	0.00	87.02	0.82	0.00	0.82	0.08	0.00	0.00

PROPULSIVE WING FORCE DATA

SUMMARY, RUN 435

PT	Q ALPHA BETA	REY NO HEIGHT	CL1S CNF1B CNUC	CD1S CAF1B CNUW	CPM1S CPM1B CNUT	CRM1S CRM1B CLTR	CYM1S CYM1B CDTR	CSF1S CSF1B CNTR
2	0.00		-8.76	0.68	461.30	3.50	-6.67	0.64
	0.00	0.30E+08	-8.76	0.68	461.30	3.50	-6.67	0.64
	0.00	40.00	0.00	0.00	0.00	5.57	8.15	457.30
3	0.00		-18.16	0.70	949.20	6.34	-5.04	0.81
	0.04	0.30E+08	-18.16	0.71	949.20	6.34	-5.03	0.81
	0.00	40.00	0.00	0.00	0.00	-2.83	8.18	945.30
4	0.00		-28.90	0.98	1423.00	7.56	-3.56	0.10
	0.07	0.30E+08	-28.89	1.02	1423.00	7.56	-3.55	0.10
	0.00	40.00	0.00	0.00	0.00	-13.58	8.47	1418.00
5	0.00		-37.83	0.94	1917.00	9.22	-0.15	-0.06
	0.11	0.30E+08	-37.83	1.02	1917.00	9.22	-0.13	-0.06
	0.00	40.00	0.00	0.00	0.00	-22.52	8.44	1913.00
6	0.00		-48.76	1.77	2392.00	14.83	-10.04	0.96
	0.16	0.30E+08	-48.76	1.91	2392.00	14.66	-9.98	0.96
	0.00	40.00	0.00	0.00	0.00	-33.45	9.29	2388.00
7	0.00		-27.29	0.93	1422.00	10.17	-14.40	1.61
	0.08	0.30E+08	-27.28	0.97	1422.00	10.19	-14.39	1.61
	0.00	40.00	0.00	0.00	0.00	-11.97	8.42	1418.00
8	0.00		-10.21	0.63	468.00	3.77	-12.51	1.24
	0.00	0.30E+08	-10.21	0.63	468.00	3.77	-12.51	1.24
	0.00	40.00	0.00	0.00	0.00	5.12	8.10	484.00
9	0.00		-0.29	-0.11	-8.10	0.57	-11.33	0.45
	-0.04	0.30E+08	-0.29	-0.11	-8.10	0.56	-11.33	0.45
	0.00	40.00	0.00	0.00	0.00	15.04	7.35	-12.08

PROPULSIVE WING FORCE DATA

SUMMARY, RUN 436

PT	Q ALPHA BETA	REY NO HEIGHT	CL1S CNF1B CNUC	CD1S CAF1B CNUW	CPM1S CPM1B CNUT	CRM1S CRM1B CLTR	CYM1S CYM1B CDTR	CSF1S CSF1B CNTR
2	0.00		-1.14	-0.14	-3.46	0.44	4.37	-0.81
	-0.05	0.30E+08	-1.14	-0.14	-3.46	0.45	4.37	-0.81
	0.00	40.00	0.00	0.00	0.00	14.20	7.32	-7.44
3	0.00		-0.03	-0.41	-1.50	-24.30	493.50	-10.64
	-0.05	0.30E+08	-0.03	-0.41	-1.50	-23.87	493.50	-10.64
	0.00	40.00	0.00	0.00	0.00	15.30	7.04	-5.57
4	0.00		-0.15	3.73	-10.27	-48.11	987.40	-21.10
	-0.05	0.30E+08	-0.15	3.73	-10.27	-47.25	987.40	-21.10
	0.00	40.00	0.00	0.00	0.00	15.19	11.19	-14.28
5	0.00		-0.50	3.93	-1.26	-71.76	1488.00	-31.33
	-0.05	0.30E+08	-0.50	3.93	-1.26	-70.50	1488.00	-31.33
	0.00	40.00	0.00	0.00	0.00	14.84	11.38	-9.24
6	0.00		2.18	4.05	-6.15	-92.26	2003.00	-41.61
	-0.05	0.30E+08	2.17	4.05	-6.15	-90.08	2003.00	-41.61
	0.00	40.00	0.00	0.00	0.00	17.51	11.50	-10.13
7	0.00		-0.29	4.49	14.50	-111.50	2484.00	-51.40
	-0.04	0.30E+08	-0.29	4.49	14.50	-108.80	2484.00	-51.40
	0.00	40.00	0.00	0.00	0.00	15.05	11.84	10.52
8	0.00		-1.50	5.33	7.48	-85.26	1488.90	-31.02
	-0.05	0.30E+08	-1.60	5.33	7.48	-84.07	1488.00	-31.02
	0.00	40.00	0.00	0.00	0.00	13.74	12.79	3.49
9	0.00		-1.24	5.99	-3.79	-18.49	514.30	-11.61
	-0.05	0.30E+08	-1.25	5.99	-3.79	-18.04	514.30	-11.61
	0.00	40.00	0.00	0.00	0.00	14.09	13.45	-7.77
10	0.00		-0.54	7.34	-10.72	7.70	5.61	-0.52
	-0.05	0.30E+08	-0.54	7.34	-10.72	7.70	5.60	-0.52
	0.00	40.00	0.00	0.00	0.00	14.80	14.80	-14.70

APPENDIX B

TABULATED WING PRESSURE DATA

WING PRESSURE COEFFICIENTS

RUN 105 POINT 19 ALPHA -2.02 PSI 0.00 HEIGHT 87.16

X/C, %		BP 2	BP 6	BP 12	BP 16	BP 22
0.0	(UPPER)	0.819	0.375	0.334	0.180	-0.026
2.5		0.733	0.187	0.214	0.248	0.338
5.0		0.083	0.084	0.098	0.134	0.165
10.0		-0.014	-0.008	-0.005	0.008	0.020
15.0		-0.048	-0.059	-0.027	-0.031	0.003
24.0		-0.072	-0.055	-0.046	-0.077	-0.057
33.0		-0.048	-0.062	-0.055	-0.072	-0.067
54.0		-0.074	-0.085	-0.104	0.775	-0.089
65.0		-0.136	-0.139	-0.163	-0.141	-0.053
78.5		0.081	-0.338	-0.338	-0.301	-0.278
79.5		-38.410	-38.268	-39.544	-38.973	-40.082
80.5		-38.133	-38.201	-39.141	-37.126	-37.092
81.5		-34.741	-40.552	-40.619	-37.126	-35.816
82.0		-39.544	-37.126	-38.872	-39.645	-38.268
84.0		-36.857	-39.410	-38.671	-37.598	-37.831
87.0		-36.319	-37.730	-38.436	-39.343	-36.387
89.0		-0.116	-0.157	-0.208	-0.217	-0.140
93.0		-0.051	-0.086	-0.119	-0.148	0.099
96.0		-0.013	-0.044	-0.047	-0.072	-0.115
100.0		0.009	0.014	0.024	0.030	0.020
2.5	(LOWER)	-0.317	-0.397	-0.532	-0.518	-0.917
5.0		-0.249	-0.210	-0.328	-0.374	-0.451
10.0		-0.183	-0.287	-0.259	-0.287	-0.346
24.0		-0.173	-0.191	-0.198	-0.235	-0.209
33.0		-0.142	-0.141	-0.164	-0.181	-0.145
54.0		-0.092	-0.123	-0.107	-0.127	-0.084
73.5		-0.009	0.033	0.079	0.089	0.092
84.0		0.138	0.190	0.179	0.209	0.176
96.0		0.139	0.197	1.133	0.208	0.191

RUN 105 POINT 20 ALPHA 0.00 PSI 0.00 HEIGHT 94.09

X/C, %		BP 2	BP 6	BP 12	BP 16	BP 22
0.0	(UPPER)	0.827	0.504	0.509	0.460	0.413
2.5		0.727	0.092	0.066	0.068	0.141
5.0		0.011	0.005	-0.021	0.000	0.024
10.0		-0.068	-0.059	-0.094	-0.104	-0.105
15.0		-0.094	-0.119	-0.084	-0.123	-0.067
24.0		-0.122	-0.089	-0.086	-0.155	-0.116
33.0		-0.085	-0.097	-0.093	-0.124	-0.120
54.0		-0.079	-0.100	-0.130	0.767	-0.089
65.0		-0.154	-0.151	-0.184	-0.155	-0.069
78.5		0.075	-0.353	-0.354	-0.297	-0.253
79.5		-38.010	-36.906	-37.976	-37.474	-38.411
80.5		-36.738	-36.839	-37.642	-35.701	-35.634
81.5		-33.560	-39.047	-39.013	-35.735	-34.497
82.0		-38.144	-35.735	-37.374	-38.010	-36.772
84.0		-35.500	-37.909	-37.140	-36.002	-36.337
87.0		-34.965	-36.370	-37.039	-37.842	-35.132
89.0		-0.115	-0.158	-0.205	-0.212	-0.131
93.0		-0.054	-0.088	-0.115	-0.144	0.108
96.0		-0.013	-0.042	-0.047	-0.067	-0.121
100.0		0.012	0.024	0.035	0.035	0.004
2.5	(LOWER)	-0.198	-0.226	-0.256	-0.283	-0.347
5.0		-0.170	-0.122	-0.183	-0.206	-0.267
10.0		-0.100	-0.155	-0.164	-0.156	-0.225
24.0		-0.128	-0.132	-0.137	-0.177	-0.144
33.0		-0.092	-0.094	-0.112	-0.120	-0.094
54.0		-0.059	0.103	-0.081	-0.111	-0.067
73.5		-0.003	0.042	0.091	0.109	0.110
84.0		0.154	0.211	0.200	0.233	0.196
96.0		0.158	0.211	1.142	0.224	0.208

WING PRESSURE COEFFICIENTS

RUN 105 POINT 21 ALPHA 2.00 PSI 0.00 HEIGHT 89.00

X/C, %		BP 2	BP 6	BP 12	BP 16	BP 22
0.0	(UPPER)	0.829	0.550	0.518	0.487	0.500
2.5		0.721	-0.030	-0.121	-0.180	-0.119
5.0		-0.067	-0.080	-0.164	-0.181	-0.156
10.0		-0.130	-0.122	-0.194	-0.226	-0.243
15.0		-0.147	-0.185	-0.154	-0.218	-0.144
24.0		-0.177	-0.138	-0.137	-0.234	-0.180
33.0		-0.127	-0.138	-0.132	-0.183	-0.168
54.0		-0.092	-0.123	-0.180	0.768	-0.114
65.0		-0.175	-0.170	-0.207	-0.177	-0.080
78.5		0.087	-0.374	-0.371	-0.296	-0.283
79.5		-37.513	-36.450	-37.446	-37.048	-37.911
80.5		-36.251	-36.351	-37.081	-35.288	-35.155
81.5		-33.097	-38.608	-38.509	-35.288	-34.060
82.0		-37.579	-35.222	-35.849	-37.479	-36.284
84.0		-35.023	-37.313	-36.816	-35.454	-35.952
87.0		-34.558	-35.952	-36.583	-37.313	-34.757
89.0		-0.121	-0.186	-0.204	-0.212	-0.153
93.0		-0.061	-0.094	-0.116	-0.142	0.107
96.0		-0.020	-0.043	-0.049	-0.067	-0.135
100.0		0.016	0.028	0.038	0.032	-0.015
2.5	(LOWER)	-0.085	-0.068	-0.051	-0.048	-0.045
5.0		-0.095	-0.035	-0.032	-0.041	-0.076
10.0		-0.025	-0.038	-0.064	-0.036	-0.112
24.0		-0.089	-0.075	-0.080	-0.128	-0.099
33.0		-0.050	-0.057	-0.073	-0.071	-0.061
54.0		-0.032	-0.087	-0.064	-0.099	-0.063
73.5		-0.001	0.045	0.101	0.114	0.136
84.0		0.165	0.220	0.206	0.241	0.201
96.0		0.169	0.217	1.147	0.229	0.216

RUN 105 POINT 22 ALPHA 4.02 PSI 0.00 HEIGHT 85.06

X/C, %		BP 2	BP 6	BP 12	BP 16	BP 22
0.0	(UPPER)	0.831	0.486	0.330	0.196	0.222
2.5		0.718	-0.167	-0.334	-0.427	-0.443
5.0		-0.152	-0.187	-0.314	-0.338	-0.355
10.0		-0.195	-0.193	-0.298	-0.350	-0.384
15.0		-0.202	-0.256	-0.226	-0.317	-0.236
24.0		-0.225	-0.179	-0.186	-0.315	-0.241
33.0		-0.167	-0.176	-0.152	-0.202	-0.219
54.0		-0.098	-0.145	-0.185	0.768	-0.124
65.0		-0.192	-0.183	-0.227	-0.191	-0.059
78.5		0.057	-0.387	-0.385	-0.291	-0.281
79.5		-38.845	-35.885	-36.579	-36.281	-37.009
80.5		-35.487	-35.586	-36.248	-34.561	-34.382
81.5		-32.444	-37.889	-37.837	-34.495	-33.370
82.0		-36.744	-34.481	-36.016	-36.545	-35.520
84.0		-34.197	-36.413	-35.818	-34.561	-35.189
87.0		-33.888	-35.222	-35.851	-36.545	-34.098
89.0		-0.119	-0.186	-0.202	-0.210	-0.183
93.0		-0.065	-0.092	-0.113	-0.141	0.109
96.0		-0.023	-0.040	-0.048	-0.065	-0.150
100.0		0.016	0.035	0.041	0.030	-0.028
2.5	(LOWER)	0.029	0.081	0.127	0.143	0.187
5.0		-0.008	0.060	0.108	0.107	0.089
10.0		0.056	0.080	0.030	0.081	-0.002
24.0		-0.042	-0.017	-0.024	-0.071	-0.045
33.0		-0.005	-0.012	-0.025	-0.026	-0.024
54.0		0.001	-0.063	-0.037	-0.081	-0.058
73.5		0.010	0.056	0.109	0.122	0.112
84.0		0.180	0.234	0.214	0.251	0.198
96.0		0.185	0.227	1.150	0.233	0.208

WING PRESSURE COEFFICIENTS

RUN 105 POINT 23 ALPHA 5.99 PSI 0.00 HEIGHT 85.37

X/C, %	BP 2	BP 6	BP 12	BP 16	BP 22
0.0 (UPPER)	0.831	0.310	-0.080	-0.367	-0.453
2.5	0.710	-0.340	-0.588	-0.746	-0.861
5.0	-0.255	-0.326	-0.507	-0.550	-0.578
10.0	-0.278	-0.279	-0.404	-0.472	-0.530
15.0	-0.268	-0.341	-0.297	-0.415	-0.324
24.0	-0.289	-0.242	-0.241	-0.390	-0.314
33.0	-0.221	-0.217	-0.206	-0.278	-0.264
54.0	-0.124	-0.180	-0.223	0.768	-0.170
65.0	-0.221	-0.211	-0.258	-0.220	-0.096
78.5	0.041	-0.414	-0.410	-0.298	-0.309
79.5	-36.353	-35.345	-36.051	-35.883	-36.521
80.5	-35.144	-35.245	-35.782	-34.170	-33.934
81.5	-32.194	-37.529	-37.228	-33.968	-32.994
82.0	-36.319	-34.069	-35.614	-36.051	-35.110
84.0	-33.834	-35.883	-35.379	-34.069	-34.808
87.0	-33.565	-34.808	-35.412	-36.118	-33.733
89.0	-0.130	-0.178	-0.212	-0.217	-0.230
93.0	-0.076	-0.102	-0.124	-0.150	0.102
96.0	-0.031	-0.046	-0.060	-0.078	-0.185
100.0	0.005	0.031	0.029	0.014	-0.065
2.5 (LOWER)	0.129	0.203	0.257	0.276	0.348
5.0	0.062	0.133	0.216	0.217	0.217
10.0	0.124	0.179	0.107	0.171	0.082
24.0	-0.007	0.030	0.021	-0.032	-0.007
33.0	0.033	0.019	0.010	0.008	-0.003
54.0	0.021	-0.049	-0.021	-0.076	-0.062
73.5	0.010	0.058	0.113	0.122	0.104
84.0	0.186	0.237	0.217	0.250	0.185
96.0	0.188	0.226	1.156	0.226	0.183

RUN 105 POINT 24 ALPHA 8.02 PSI 0.00 HEIGHT 85.49

X/C, %	BP 2	BP 6	BP 12	BP 16	BP 22
0.0 (UPPER)	0.837	-0.019	-0.710	-1.228	-1.510
2.5	0.708	-0.525	-1.044	-0.951	-1.111
5.0	-0.352	-0.456	-0.836	-0.723	-0.810
10.0	-0.352	-0.352	-0.525	-0.821	-0.690
15.0	-0.330	-0.405	-0.381	-0.518	-0.427
24.0	-0.344	-0.286	-0.297	-0.466	-0.386
33.0	-0.265	-0.267	-0.244	-0.327	-0.321
54.0	-0.139	-0.200	-0.250	0.770	-0.208
65.0	-0.240	-0.226	-0.276	-0.239	-0.130
78.5	0.039	-0.424	-0.423	-0.303	-0.338
79.5	-35.077	-34.035	-34.506	-34.438	-34.942
80.5	-33.800	-33.901	-34.304	-32.792	-32.467
81.5	-31.062	-36.118	-35.648	-32.359	-31.654
82.0	-34.909	-32.758	-34.136	-34.405	-33.632
84.0	-32.587	-34.270	-33.934	-32.547	-33.363
87.0	-32.336	-33.431	-33.968	-34.606	-32.369
89.0	-0.129	-0.178	-0.212	-0.221	-0.273
93.0	-0.077	-0.100	-0.123	-0.155	0.107
96.0	-0.032	-0.042	-0.059	-0.082	-0.215
100.0	0.015	0.034	0.028	0.007	-0.097
2.5 (LOWER)	0.236	0.322	0.366	0.375	0.476
5.0	0.145	0.215	0.319	0.320	0.325
10.0	0.202	0.279	0.190	0.264	0.166
24.0	0.043	0.090	0.076	0.020	0.041
33.0	0.082	0.067	0.057	0.055	0.027
54.0	0.054	-0.022	0.008	-0.053	-0.057
73.5	0.025	0.068	0.120	0.132	0.103
84.0	0.201	0.248	0.218	0.253	0.178
96.0	0.199	0.231	1.159	0.225	0.170

WING PRESSURE COEFFICIENTS

RUN 105 POINT 25 ALPHA 10.00 PSI 0.00 HEIGHT 85.47

X/C, %	BP 2	BP 6	BP 12	BP 16	BP 22
0.0 (UPPER)	0.841	-0.489	-1.550	-2.317	-2.960
2.5	0.707	-0.751	-1.045	-1.362	-1.738
5.0	-0.480	-0.576	-0.825	-0.954	-1.084
10.0	-0.417	-0.450	-0.645	-0.784	-0.873
15.0	-0.390	-0.483	-0.466	-0.626	-0.542
24.0	-0.404	-0.340	-0.354	-0.543	-0.483
33.0	-0.310	-0.307	-0.288	-0.379	-0.384
54.0	-0.157	-0.226	-0.278	0.774	-0.256
65.0	-0.260	-0.244	-0.299	-0.284	-0.174
78.5	0.034	-0.435	-0.441	-0.311	-0.374
79.5	-33.500	-32.533	-32.733	-32.767	-33.133
80.5	-32.250	-32.333	-32.600	-31.217	-30.803
81.5	-29.697	-34.433	-33.833	-30.537	-30.183
82.0	-33.300	-31.187	-32.433	-32.600	-31.983
84.0	-31.110	-32.367	-32.303	-30.857	-31.743
87.0	-30.827	-31.770	-32.287	-32.900	-30.833
89.0	-0.133	-0.176	-0.218	-0.233	-0.320
93.0	-0.081	-0.098	-0.130	-0.187	0.109
96.0	-0.037	-0.038	-0.066	-0.094	-0.251
100.0	0.010	0.036	0.025	-0.005	-0.137
2.5 (LOWER)	0.323	0.411	0.436	0.429	0.536
5.0	0.221	0.286	0.401	0.395	0.403
10.0	0.270	0.365	0.281	0.343	0.236
24.0	0.092	0.141	0.125	0.069	0.081
33.0	0.125	0.110	0.101	0.097	0.055
54.0	0.087	0.006	0.034	-0.034	-0.054
73.5	0.036	0.083	0.131	0.136	0.083
84.0	0.213	0.259	0.224	0.255	0.168
96.0	0.208	0.238	1.161	0.224	0.153

RUN 105 POINT 26 ALPHA 11.99 PSI 0.00 HEIGHT 85.34

X/C, %	BP 2	BP 6	BP 12	BP 16	BP 22
0.0 (UPPER)	0.842	-1.099	-2.859	-3.236	-1.578
2.5	0.706	-0.870	-1.407	-2.243	-1.242
5.0	-0.542	-0.712	-1.027	-1.292	-1.113
10.0	-0.497	-0.538	-0.770	-0.906	-1.206
15.0	-0.455	-0.560	-0.558	-0.735	-0.967
24.0	-0.458	-0.393	-0.418	-0.825	-0.881
33.0	-0.350	-0.352	-0.339	-0.440	-0.680
54.0	-0.175	-0.250	-0.310	0.778	-0.373
65.0	-0.283	-0.262	-0.320	-0.288	-0.243
78.5	0.034	-0.447	-0.452	-0.311	-0.408
79.5	-32.088	-31.112	-31.068	-31.311	-31.384
80.5	-30.856	-30.912	-31.032	-29.770	-29.248
81.5	-28.465	-32.931	-32.267	-29.100	-28.814
82.0	-31.805	-29.790	-30.892	-30.895	-30.444
84.0	-29.767	-30.670	-30.770	-29.355	-30.238
87.0	-29.468	-30.285	-30.770	-31.327	-29.359
89.0	-0.136	-0.177	-0.221	-0.234	-0.387
93.0	-0.085	-0.099	-0.132	-0.187	0.112
96.0	-0.041	-0.037	-0.067	-0.098	-0.326
100.0	0.010	0.036	0.025	-0.016	-0.218
2.5 (LOWER)	0.409	0.486	0.488	0.450	0.559
5.0	0.294	0.364	0.474	0.486	0.440
10.0	0.343	0.444	0.334	0.423	0.276
24.0	0.143	0.201	0.184	0.173	0.114
33.0	0.178	0.159	0.149	0.143	0.081
54.0	0.124	0.040	0.066	-0.009	-0.036
73.5	0.057	0.101	0.147	0.149	0.085
84.0	0.231	0.276	0.234	0.265	0.167
96.0	0.220	0.248	1.162	0.226	0.135

WING PRESSURE COEFFICIENTS

RUN 105 POINT 27 ALPHA 14.01 PSI 0.00 HEIGHT 88.17

X/C, %		BP 2	BP 6	BP 12	BP 16	BP 22
0.0	(UPPER)	0.840	-2.008	-4.236	-3.292	-1.349
2.5		0.696	-1.152	-1.827	-2.717	-1.110
5.0		-0.687	-0.897	-1.294	-2.781	-0.993
10.0		-0.596	-0.652	-0.951	-1.917	-1.127
15.0		-0.539	-0.653	-0.691	-0.758	-0.912
24.0		-0.526	-0.461	-0.515	-0.646	-0.980
33.0		-0.406	-0.404	-0.417	-0.459	-0.954
54.0		-0.209	-0.285	-0.357	0.774	-0.725
65.0		-0.319	-0.293	-0.351	-0.297	-0.531
78.5		0.023	-0.482	-0.480	-0.332	-0.596
79.5		-31.362	-30.419	-30.097	-30.542	-30.429
80.5		-30.137	-30.201	-30.114	-29.033	-28.334
81.5		-27.889	-32.182	-31.462	-28.214	-28.170
82.0		-31.061	-29.047	-30.094	-30.131	-29.682
84.0		-29.067	-29.726	-29.974	-28.354	-29.482
87.0		-28.772	-29.475	-30.044	-30.559	-28.629
89.0		-0.154	-0.197	-0.238	-0.234	-0.612
93.0		-0.099	-0.114	-0.147	-0.165	0.104
96.0		-0.053	-0.050	-0.081	-0.095	-0.511
100.0		0.004	0.030	0.016	0.020	-0.380
2.5	(LOWER)	0.482	0.542	0.501	0.477	0.561
5.0		0.365	0.436	0.538	0.519	0.468
10.0		0.416	0.518	0.403	0.486	0.311
24.0		0.192	0.258	0.240	0.168	0.145
33.0		0.227	0.206	0.194	0.180	0.106
54.0		0.159	0.067	0.095	0.009	-0.027
73.5		0.073	0.111	0.161	0.160	0.081
84.0		0.249	0.288	0.241	0.270	0.152
96.0		0.231	0.254	1.160	0.229	0.083

RUN 105 POINT 28 ALPHA 15.99 PSI 0.00 HEIGHT 85.90

X/C, %		BP 2	BP 6	BP 12	BP 16	BP 22
0.0	(UPPER)	0.840	-3.170	5.610	-2.880	-1.396
2.5		0.692	-1.465	-2.192	-2.650	-1.293
5.0		-0.835	-1.109	-1.695	-2.710	-1.175
10.0		-0.701	-0.789	-1.181	-2.757	-1.322
15.0		-0.627	-0.769	-0.870	-1.949	-1.101
24.0		-0.592	-0.537	-0.641	-0.756	-1.196
33.0		-0.462	-0.470	-0.515	-0.479	-1.242
54.0		-0.236	-0.319	-0.411	0.770	-1.176
65.0		-0.341	-0.319	-0.385	-0.308	-0.762
78.5		0.017	-0.511	-0.503	-0.342	-0.662
79.5		-30.373	-29.410	-28.973	-29.567	-29.273
80.5		-29.187	-29.253	-28.953	-28.060	-27.150
81.5		-27.017	-31.193	-30.300	-27.080	-27.257
82.0		-29.970	-28.043	-29.007	-29.003	-28.630
84.0		-28.127	-28.493	-28.960	-27.120	-28.507
87.0		-27.877	-28.547	-29.017	-29.480	-27.623
89.0		-0.165	-0.209	-0.253	-0.249	-0.650
93.0		-0.107	-0.122	-0.163	-0.182	0.103
96.0		-0.057	-0.054	-0.095	-0.115	-0.552
100.0		0.002	0.030	0.005	-0.040	-0.381
2.5	(LOWER)	0.549	0.574	0.475	0.459	0.559
5.0		0.440	0.507	0.583	0.552	0.506
10.0		0.488	0.584	0.466	0.543	0.368
24.0		0.245	0.318	0.296	0.218	0.204
33.0		0.281	0.257	0.246	0.226	0.153
54.0		0.198	0.103	0.128	0.043	0.000
73.5		0.094	0.131	0.178	0.173	0.088
84.0		0.271	0.304	0.252	0.280	0.152
96.0		0.244	0.264	1.159	0.227	0.084

WING PRESSURE COEFFICIENTS

RUN 105 POINT 29 ALPHA 17.99 PSI 0.00 HEIGHT 86.26

X/C, %		BP 2	BP 6	BP 12	BP 16	BP 22
0.0	(UPPER)	0.840	-4.553	-4.800	-2.150	-1.158
2.5		0.890	-2.003	-2.353	-1.921	-1.074
5.0		-1.015	-1.288	-2.011	-1.871	-0.958
10.0		-0.821	-0.837	-1.851	-1.955	-1.127
15.0		-0.718	-0.907	-1.434	-1.850	-0.919
24.0		-0.860	-0.844	-1.041	-1.548	-1.003
33.0		-0.508	-0.535	-0.842	-1.146	-0.986
54.0		-0.258	-0.355	-0.410	0.770	-0.846
65.0		-0.364	-0.349	-0.399	-0.479	-0.671
78.5		0.008	-0.542	-0.549	-0.411	-0.895
79.5		-28.803	-27.683	-27.533	-27.960	-27.637
80.5		-27.857	-27.687	-27.393	-26.490	-25.697
81.5		-25.683	-29.583	-28.753	-25.727	-25.807
82.0		-28.320	-28.487	-27.187	-27.283	-28.983
84.0		-26.593	-26.887	-27.287	-25.603	-28.890
87.0		-26.483	-27.027	-27.230	-27.833	-26.157
89.0		-0.170	-0.224	-0.279	-0.348	-0.723
93.0		-0.113	-0.138	-0.178	-0.293	0.098
96.0		-0.067	-0.069	-0.109	-0.214	-0.658
100.0		-0.014	0.014	-0.005	-0.088	-0.607
2.5	(LOWER)	0.606	0.587	0.475	0.455	0.553
5.0		0.513	0.575	0.618	0.568	0.514
10.0		0.566	0.644	0.511	0.574	0.388
24.0		0.296	0.375	0.338	0.250	0.229
33.0		0.330	0.301	0.279	0.255	0.174
54.0		0.228	0.131	0.149	0.057	0.004
73.5		0.110	0.148	0.184	0.168	0.089
84.0		0.288	0.314	0.253	0.287	0.120
96.0		0.255	0.267	1.160	0.205	-0.007

RUN 105 POINT 30 ALPHA 20.01 PSI 0.00 HEIGHT 88.23

X/C, %		BP 2	BP 6	BP 12	BP 16	BP 22
0.0	(UPPER)	0.846	-4.916	-2.159	-1.688	-1.106
2.5		0.891	-4.574	-2.083	-1.475	-1.040
5.0		-1.212	-1.426	-2.152	-1.447	-0.924
10.0		-0.947	-0.940	-2.199	-1.515	-1.106
15.0		-0.813	-0.928	-2.042	-1.534	-0.880
24.0		-0.727	-0.683	-1.571	-1.651	-0.993
33.0		-0.556	-0.514	-0.996	-1.474	-0.979
54.0		-0.281	-0.399	-0.484	0.775	-0.880
65.0		-0.379	-0.377	-0.420	-0.694	-0.748
78.5		0.003	-0.558	-0.571	-0.482	-0.838
79.5		-28.940	-27.924	-27.828	-28.363	-27.918
80.5		-27.944	-28.037	-27.795	-28.875	-26.005
81.5		-25.909	-29.933	-29.209	-26.493	-26.205
82.0		-28.575	-28.812	-27.526	-27.692	-27.350
84.0		-26.795	-26.865	-27.649	-25.936	-27.293
87.0		-26.749	-27.177	-27.569	-28.230	-26.600
89.0		-0.167	-0.231	-0.278	-0.395	-0.885
93.0		-0.110	-0.146	-0.184	-0.340	0.097
96.0		-0.065	-0.077	-0.113	-0.254	-0.813
100.0		-0.015	0.005	-0.002	-0.124	-0.780
2.5	(LOWER)	0.650	0.589	0.516	0.440	0.536
5.0		0.585	0.646	0.651	0.573	0.522
10.0		0.645	0.697	0.547	0.604	0.415
24.0		0.350	0.429	0.380	0.288	0.265
33.0		0.380	0.348	0.319	0.280	0.208
54.0		0.266	0.167	0.181	0.081	0.021
73.5		0.130	0.167	0.201	0.182	0.054
84.0		0.307	0.332	0.266	0.274	0.109
96.0		0.270	0.274	1.168	0.201	-0.058

WING PRESSURE COEFFICIENTS

RUN 105 POINT 31 ALPHA 21.97 PSI 0.00 HEIGHT 95.75

X/C, %		BP 2	BP 6	BP 12	BP 16	BP 22
0.0	(UPPER)	0.851	-4.336	-1.985	-1.684	-1.131
2.5		0.591	-4.564	-1.918	-1.469	-1.068
5.0		-1.418	-3.925	-1.996	-1.437	-0.550
10.0		-1.085	-1.084	-2.004	-1.507	-1.143
15.0		-0.929	-1.017	-1.970	-1.525	-0.925
24.0		-0.819	-0.775	-1.765	-1.670	-1.036
33.0		-0.628	-0.681	-1.379	-1.541	-1.019
54.0		-0.319	-0.452	-0.647	0.779	-0.908
65.0		-0.407	-0.416	-0.483	-0.877	-0.771
78.5		-0.008	-0.587	-0.611	-0.592	-0.882
79.5		-28.826	-27.812	-27.344	-28.328	-27.916
80.5		-27.913	-28.020	-27.702	-26.869	-25.955
81.5		-25.858	-29.950	-29.234	-26.544	-26.230
82.0		-28.508	-26.768	-27.531	-27.692	-27.307
84.0		-26.705	-26.819	-27.615	-25.925	-27.290
87.0		-26.742	-27.267	-27.585	-28.284	-26.578
89.0		-0.177	-0.248	-0.312	-0.498	-0.921
93.0		-0.123	-0.163	-0.217	-0.425	0.088
96.0		-0.077	-0.094	-0.141	-0.330	-0.863
100.0		-0.025	-0.012	-0.018	-0.184	-0.845
2.5	(LOWER)	0.660	0.583	0.491	0.411	0.511
5.0		0.635	0.687	0.660	0.577	0.525
10.0		0.699	0.728	0.574	0.631	0.434
24.0		0.390	0.472	0.416	0.317	0.291
33.0		0.420	0.381	0.350	0.303	0.230
54.0		0.293	0.194	0.206	0.100	0.032
73.5		0.145	0.183	0.211	0.188	0.036
84.0		0.325	0.345	0.269	0.271	0.103
96.0		0.279	0.277	1.174	0.180	-0.077

RUN 106 POINT 1 ALPHA -1.98 PSI 0.00 HEIGHT 81.98

X/C, %		BP 2	BP 6	BP 12	BP 16	BP 22
0.0	(UPPER)	0.730	0.117	0.155	0.006	0.096
2.5		0.503	0.466	0.405	0.324	0.249
5.0		0.215	0.276	0.156	0.245	0.252
10.0		0.150	0.265	0.069	-0.028	-0.172
15.0		0.086	-0.020	0.125	-0.104	0.104
24.0		-0.159	0.015	0.021	-0.317	-0.158
33.0		-0.115	-0.082	-0.026	-0.196	-0.215
54.0		0.000	-0.142	-0.277	0.597	-0.123
65.0		-0.384	-0.312	-0.428	-0.330	0.010
78.5		-0.051	-1.009	-1.043	-0.685	-0.543
79.5		-43.634	-42.688	-44.835	-50.064	-43.492
80.5		-42.272	-42.007	-42.674	-39.955	-40.210
81.5		-38.504	-45.846	-43.572	-38.248	-38.749
82.0		-43.799	-41.147	-42.995	-47.227	-41.931
84.0		-40.820	-42.981	-42.149	-42.499	-41.180
87.0		-40.092	-41.383	-41.538	-42.835	-39.785
89.0		-0.252	-0.244	-1.852	-1.177	1.063
93.0		-0.108	-0.146	0.267	-0.709	0.104
96.0		-0.049	-0.308	0.724	0.232	-0.685
100.0		-0.987	-0.948	-0.826	-0.824	-0.637
2.5	(LOWER)	-0.416	-0.399	-0.510	-0.721	-0.447
5.0		-0.366	-0.098	-0.294	-0.369	-0.388
10.0		-0.065	-0.200	-0.281	-0.168	-0.361
24.0		-0.204	-0.112	-0.196	-0.343	-0.174
33.0		-0.047	-0.114	-0.157	-0.199	-0.078
54.0		0.000	-0.171	-0.124	-0.241	-0.138
73.5		-0.218	-0.059	0.017	0.040	0.004
84.0		0.132	0.186	0.416	0.208	0.176
96.0		0.145	0.139	1.021	0.151	0.139

WING PRESSURE COEFFICIENTS

RUN 106 POINT 2 ALPHA 0.00 PSI 0.00 HEIGHT 88.88

X/C, %		BP 2	BP 6	BP 12	BP 16	BP 22
0.0	(UPPER)	0.762	0.324	0.415	0.259	0.403
2.5		0.472	0.364	0.233	0.120	0.013
5.0		0.140	0.178	0.001	0.081	0.074
10.0		0.076	0.172	-0.060	-0.180	-0.315
15.0		0.013	-0.112	0.025	-0.214	0.005
24.0		-0.226	-0.054	-0.058	-0.405	-0.232
33.0		-0.174	-0.139	-0.100	-0.264	-0.279
54.0		-0.019	-0.178	-0.337	0.571	-0.167
65.0		-0.406	-0.342	-0.479	-0.364	-0.019
78.5		-0.059	-1.033	-1.072	-0.892	-0.580
79.5		-43.092	-42.170	-44.143	-49.285	-42.774
80.5		-41.818	-41.500	-42.042	-39.456	-39.585
81.5		-38.026	-43.282	-42.926	-37.802	-38.202
82.0		-43.320	-40.606	-42.384	-46.348	-41.291
84.0		-40.293	-42.303	-41.438	-41.681	-40.597
87.0		-39.632	-40.934	-41.010	-42.279	-39.276
89.0		-0.257	-0.250	-1.887	-1.203	1.083
93.0		-0.111	-0.158	0.256	-0.700	0.098
96.0		-0.056	-0.321	0.702	0.220	-0.710
100.0		-1.002	-0.956	-0.850	-0.885	-0.697
2.5	(LOWER)	-0.363	-0.307	-0.355	-0.375	-0.159
5.0		-0.301	-0.033	-0.163	-0.223	-0.213
10.0		-0.011	-0.097	-0.199	-0.063	-0.255
24.0		-0.174	-0.075	-0.149	-0.292	-0.129
33.0		-0.019	-0.087	-0.119	-0.157	-0.049
54.0		0.018	-0.180	-0.106	-0.232	-0.130
73.5		-0.223	-0.054	0.031	0.047	0.025
84.0		0.141	0.195	0.451	0.225	0.183
96.0		0.157	0.145	0.589	0.163	0.148

RUN 106 POINT 3 ALPHA 1.99 PSI 0.00 HEIGHT 87.14

X/C, %		BP 2	BP 6	BP 12	BP 16	BP 22
0.0	(UPPER)	0.773	0.478	0.487	0.238	0.348
2.5		0.534	0.251	0.037	-0.117	-0.284
5.0		0.064	0.076	-0.143	-0.086	-0.130
10.0		0.005	0.085	-0.174	-0.284	-0.451
15.0		-0.053	-0.195	-0.066	-0.316	-0.091
24.0		-0.288	-0.121	-0.121	-0.482	-0.299
33.0		-0.229	-0.196	-0.154	-0.326	-0.332
54.0		-0.025	-0.210	-0.375	0.708	-0.190
65.0		-0.414	-0.412	-0.505	-0.387	-0.047
78.5		-0.060	-1.057	-1.088	-0.704	-0.617
79.5		-35.307	-34.485	-35.692	-40.131	-34.086
80.5		-34.019	-33.596	-33.620	-31.491	-31.510
81.5		-31.048	-34.741	-34.185	-29.979	-30.502
82.0		-35.369	-32.935	-34.152	-37.137	-33.102
84.0		-32.745	-33.900	-32.888	-33.173	-32.384
87.0		-32.322	-33.135	-32.845	-33.872	-31.571
89.0		-0.246	-0.229	-2.250	-1.408	1.098
93.0		-0.104	-0.151	0.149	-0.860	0.115
96.0		-0.052	-0.319	0.615	0.152	-0.746
100.0		-1.025	-0.981	-0.877	-0.893	-0.740
2.5	(LOWER)	-0.245	-0.139	-0.141	-0.141	0.100
5.0		-0.235	0.044	-0.015	-0.058	-0.021
10.0		0.051	0.002	-0.098	0.060	-0.134
24.0		-0.135	-0.020	-0.089	-0.230	-0.074
33.0		0.026	-0.044	-0.068	-0.106	-0.016
54.0		0.054	-0.135	-0.079	-0.211	-0.133
73.5		-0.281	-0.038	0.044	0.060	0.033
84.0		0.165	0.218	0.530	0.238	0.184
96.0		0.182	0.164	1.227	0.171	0.148

WING PRESSURE COEFFICIENTS

RUN 106 POINT 4 ALPHA 4.03 PSI 0.00 HEIGHT 85.21

X/C. %		BP 2	BP 6	BP 12	BP 16	BP 22
0.0	(UPPER)	0.843	0.537	0.352	-0.082	-0.132
2.5		0.594	0.102	-0.199	-0.419	-0.677
5.0		-0.019	-0.048	-0.313	-0.301	-0.382
10.0		-0.291	-0.022	-0.300	-0.424	-0.602
15.0		-0.139	-0.293	-0.169	-0.428	-0.205
24.0		-0.360	-0.196	-0.196	-0.544	-0.369
33.0		-0.298	-0.263	-0.203	-0.367	-0.377
54.0		-0.065	-0.259	-0.412	0.793	-0.246
65.0		-0.435	-0.454	-0.534	-0.421	-0.108
78.5		-0.061	-1.082	-1.097	-0.733	-0.678
79.5		-29.598	-28.852	-29.457	-33.441	-27.671
80.5		-28.331	-27.800	-27.399	-25.611	-25.558
81.5		-26.003	-28.503	-27.791	-24.201	-24.884
82.0		-29.435	-27.255	-27.939	-30.372	-26.949
84.0		-27.169	-27.767	-26.677	-26.921	-26.371
87.0		-26.992	-27.351	-26.859	-27.638	-25.812
89.0		-0.252	-0.241	-2.356	-1.464	1.066
93.0		-0.106	-0.162	0.112	-0.665	0.114
96.0		-0.058	-0.335	0.581	0.121	-0.804
100.0		-1.041	-0.987	-0.885	-0.908	-0.771
2.5	(LOWER)	-0.134	0.004	0.040	0.048	0.304
5.0		-0.158	0.116	0.115	0.085	0.130
10.0		0.109	0.097	0.008	0.181	-0.027
24.0		-0.092	0.030	-0.039	-0.171	-0.030
33.0		0.061	-0.003	-0.032	-0.064	0.007
54.0		0.074	-0.113	-0.058	-0.191	-0.131
73.5		-0.279	-0.025	0.056	0.072	0.022
84.0		0.186	0.234	0.543	0.246	0.175
96.0		0.196	0.177	1.356	0.176	0.135

RUN 106 POINT 5 ALPHA 6.00 PSI 0.00 HEIGHT 85.73

X/C. %		BP 2	BP 6	BP 12	BP 16	BP 22
0.0	(UPPER)	0.904	0.484	-0.013	-0.703	-1.012
2.5		0.651	-0.061	-0.457	-0.801	-1.191
5.0		-0.115	-0.175	-0.497	-0.473	-0.620
10.0		-0.170	-0.137	-0.421	-0.557	-0.751
15.0		-0.225	-0.378	-0.261	-0.522	-0.323
24.0		-0.432	-0.267	-0.262	-0.520	-0.448
33.0		-0.363	-0.318	-0.257	-0.431	-0.445
54.0		-0.107	-0.301	-0.448	0.869	-0.300
65.0		-0.456	-0.488	-0.556	-0.452	-0.175
78.5		0.059	-1.097	-1.097	-0.760	-0.741
79.5		-24.158	-23.503	-23.694	-27.074	-21.753
80.5		-22.896	-22.327	-21.691	-20.181	-20.071
81.5		-21.194	-22.638	-21.863	-18.814	-19.669
82.0		-23.790	-21.916	-22.117	-24.053	-21.309
84.0		-21.954	-21.973	-20.979	-21.161	-20.812
87.0		-21.839	-21.830	-21.208	-21.825	-20.477
89.0		-0.258	-0.251	-2.407	-1.502	1.012
93.0		0.112	-0.174	0.085	-0.674	0.110
96.0		-0.064	-0.348	0.548	0.889	-0.868
100.0		-1.043	-0.978	-0.875	-0.913	-0.803
2.5	(LOWER)	-0.032	0.130	0.179	0.186	0.440
5.0		0.080	0.186	0.219	0.196	0.250
10.0		0.164	0.187	0.075	0.246	0.055
24.0		-0.047	0.070	0.010	-0.115	0.010
33.0		0.085	0.036	0.010	-0.022	0.027
54.0		0.099	-0.082	0.032	0.166	-0.126
73.5		0.261	-0.008	0.067	0.086	0.019
84.0		0.203	0.244	0.549	0.250	0.161
96.0		0.203	0.186	1.454	0.182	0.121

WING PRESSURE COEFFICIENTS

RUN 106 POINT 6 ALPHA 7.98 PSI 0.00 HEIGHT 86.04

X/C. %		BP 2	BP 6	BP 12	BP 16	BP 22
0.0	(UPPER)	1.059	0.307	-0.504	-1.590	-2.219
2.5		0.802	-0.248	-0.841	-1.022	-1.362
5.0		-0.212	-0.318	-0.833	-0.732	-0.900
10.0		-0.260	-0.251	-0.542	-0.707	-0.903
15.0		-0.309	-0.469	-0.371	-0.833	-0.460
24.0		-0.495	-0.338	-0.337	-0.677	-0.524
33.0		-0.424	-0.368	-0.314	-0.486	-0.503
54.0		-0.158	-0.347	-0.476	1.038	-0.365
65.0		-0.473	-0.531	-0.569	-0.482	-0.262
78.5		-0.044	-1.099	-1.087	-0.794	-0.831
79.5		-15.583	-14.993	-14.566	-17.151	-12.631
80.5		-14.404	-13.746	-12.783	-11.747	-11.814
81.5		-13.520	-13.553	-12.721	-10.545	-11.552
82.0		-14.989	-13.529	-13.183	-14.361	-12.489
84.0		-13.810	-13.087	-12.199	-12.413	-12.208
87.0		-13.715	-13.311	-12.417	-12.702	-12.156
89.0		-0.258	-0.256	-2.471	-1.554	0.936
93.0		-0.111	-0.181	0.047	-0.675	0.110
96.0		-0.064	-0.360	0.511	0.056	-0.946
100.0		-1.031	-0.967	-0.861	-0.904	-0.829
2.5	(LOWER)	0.077	0.249	0.294	0.289	0.515
5.0		0.006	0.247	0.312	0.296	0.346
10.0		0.223	0.276	0.157	0.322	0.151
24.0		0.002	0.119	0.065	-0.045	0.051
33.0		0.125	0.077	0.058	0.029	0.018
54.0		0.120	-0.048	0.001	-0.132	-0.118
73.5		-0.235	0.019	0.087	0.097	0.005
84.0		0.224	0.259	0.554	0.259	0.151
96.0		0.210	0.199	1.655	0.191	0.115

RUN 106 POINT 7 ALPHA 10.00 PSI 0.00 HEIGHT 85.44

X/C. %		BP 2	BP 6	BP 12	BP 16	BP 22
0.0	(UPPER)	0.554	-0.011	-1.394	-2.681	-3.017
2.5		0.288	-0.462	-0.935	-1.450	-2.549
5.0		-0.303	-0.467	-0.837	-1.014	-1.883
10.0		-0.347	-0.367	-0.679	-0.865	-1.091
15.0		-0.393	-0.543	-0.481	-0.749	-0.577
24.0		-0.559	-0.413	-0.421	-0.727	-0.572
33.0		-0.490	-0.425	-0.384	-0.545	-0.529
54.0		-0.231	-0.392	-0.510	-0.726	-0.423
65.0		-0.495	-0.563	-0.585	-0.517	-0.378
78.5		-0.019	-1.091	-1.078	-0.837	-0.880
79.5		-4.561	-4.209	-3.395	-4.703	-1.965
80.5		-3.708	-3.166	-2.207	-1.734	-1.622
81.5		-3.726	-2.625	-1.968	-1.912	-1.828
82.0		-3.952	-3.137	-2.404	-2.746	-2.020
84.0		-3.529	-2.425	-1.798	-1.995	-1.915
87.0		-3.515	-2.842	-1.958	-1.938	-2.106
89.0		-0.260	-0.262	-2.535	-1.611	0.845
93.0		-0.106	-0.187	0.008	-0.678	0.106
96.0		-0.058	-0.380	0.476	0.022	-1.029
100.0		-1.020	-0.958	-0.850	-0.915	-0.857
2.5	(LOWER)	0.182	0.338	0.367	0.361	0.547
5.0		0.096	0.298	0.381	0.377	0.418
10.0		0.269	0.343	0.228	0.377	0.232
24.0		0.051	0.155	0.116	0.037	0.084
33.0		0.156	0.114	0.098	0.078	0.062
54.0		0.130	-0.012	0.034	-0.090	-0.102
73.5		-0.194	0.055	0.118	0.116	0.011
84.0		0.247	0.277	0.555	0.266	0.140
96.0		0.207	0.208	1.080	0.202	0.108

WING PRESSURE COEFFICIENTS

RUN 100 POINT 8 ALPHA 11.99 PSI 0.00 HEIGHT 80.00

X/C, %		BP 2	BP 6	BP 12	BP 16	BP 22
0.0	(UPPER)	0.520	-0.482	-2.487	-3.873	-1.860
2.5		0.385	-0.895	-1.335	-2.773	-1.443
5.0		-0.294	-0.996	-1.050	-1.547	-1.270
10.0		-0.434	-0.487	-0.832	-0.943	-1.438
15.0		-0.484	-0.626	-0.812	-0.826	-1.147
24.0		-0.642	-0.488	-0.513	-0.787	-1.193
33.0		-0.500	-0.422	-0.486	-0.800	-1.058
54.0		-0.287	-0.438	-0.563	0.795	-0.874
65.0		-0.528	-0.801	-0.813	-0.550	-0.534
78.5		-0.611	-1.007	-1.067	-0.870	-0.904
79.5		-4.860	-4.319	-3.053	-4.726	-1.845
80.5		-3.766	-3.278	-2.311	-1.886	-1.710
81.5		-3.809	-2.728	-2.119	-1.168	-1.900
82.0		-4.045	-3.237	-2.501	-2.879	-2.174
84.0		-3.818	-2.447	-1.930	-2.110	-2.067
87.0		-3.800	-2.917	-2.008	-2.009	-2.233
88.0		-0.282	-0.278	-2.545	-1.021	0.701
93.0		-0.109	-0.203	-0.029	-0.074	0.195
96.0		-0.061	-0.490	0.458	0.013	-0.042
100.0		-0.986	-0.937	-0.853	-0.808	-0.012
2.5	(LOWER)	0.275	0.420	0.412	0.302	0.538
5.0		0.175	0.381	0.446	0.444	0.437
10.0		0.333	0.417	0.301	0.444	0.279
24.0		0.104	0.205	0.172	0.101	0.115
33.0		0.200	0.184	0.168	0.123	0.079
54.0		0.104	0.027	0.073	-0.050	-0.080
73.5		-0.182	0.082	0.138	0.138	0.073
84.0		0.270	0.294	0.564	0.278	0.130
96.0		0.210	0.224	1.184	0.213	0.104

RUN 100 POINT 9 ALPHA 14.00 PSI 0.00 HEIGHT 87.50

X/C, %		BP 2	BP 6	BP 12	BP 16	BP 22
0.0	(UPPER)	0.079	-1.151	-3.910	-3.943	-1.737
2.5		0.400	-0.880	-1.741	-3.408	-1.661
5.0		-0.513	-0.788	-1.336	-3.735	-1.523
10.0		-0.552	-0.838	-1.031	-0.775	-1.795
15.0		-0.599	-0.747	-0.760	-0.791	-1.488
24.0		-0.735	-0.501	-0.829	-0.820	-1.737
33.0		-0.642	-0.570	-0.558	-0.854	-1.717
54.0		-0.352	-0.490	-0.804	0.832	-0.770
65.0		-0.560	-0.850	-0.856	-0.592	-0.265
78.5		-0.812	-1.121	-1.123	-0.822	-0.880
79.5		-3.886	-3.943	-2.818	-3.798	-1.140
80.5		-3.900	-2.540	-1.578	-1.213	-1.034
81.5		-3.109	-2.020	-1.433	-0.528	-1.250
82.0		-3.258	-2.513	-1.752	-1.077	-1.055
84.0		-2.880	-1.880	-1.242	-1.278	-1.308
87.0		-2.897	-2.200	-1.202	-1.251	-1.095
88.0		-0.274	-0.303	-2.577	-1.712	0.633
93.0		-0.118	-0.220	-0.044	-0.741	0.100
96.0		-0.073	-0.431	0.437	-0.040	-1.13
100.0		-0.992	-0.833	-0.875	-0.800	-0.913
2.5	(LOWER)	0.346	0.480	0.421	0.303	0.525
5.0		0.247	0.410	0.494	0.481	0.473
10.0		0.304	0.481	0.330	0.490	0.330
24.0		0.153	0.258	0.278	0.160	0.187
33.0		0.244	0.208	0.192	0.172	0.120
54.0		0.183	0.004	0.102	-0.010	-0.057
73.5		-0.141	0.104	0.150	0.154	0.020
84.0		0.288	0.310	0.578	0.291	0.140
96.0		0.231	0.234	1.270	0.224	0.100

WING PRESSURE COEFFICIENTS

RUN 100 POINT 10 ALPHA 16.00 PSI 0.00 HEIGHT 87.27

X/C, %		BP 2	BP 6	BP 12	BP 16	BP 22
0.0	(UPPER)	0.726	-1.985	-5.463	-3.772	-1.878
2.5		0.436	-1.150	-2.107	-3.729	-1.794
5.0		-0.636	-0.976	-1.000	-4.400	-1.895
10.0		-0.602	-0.701	-1.229	-2.108	-1.888
15.0		-0.863	-0.851	-0.914	-0.729	-1.804
24.0		-0.804	-0.650	-0.735	-0.857	-2.034
33.0		-0.807	-0.633	-0.635	-0.879	-2.190
54.0		-0.268	-0.537	-0.843	0.881	-0.889
65.0		-0.502	-0.879	-0.877	-0.814	-0.487
78.5		-0.890	-1.129	-1.130	-0.871	-0.942
79.5		-3.315	-2.954	-2.050	-2.982	-0.585
80.5		-2.456	-2.014	-1.638	-0.745	-0.535
81.5		-2.580	-1.513	-0.975	-0.116	-0.904
82.0		-2.881	-1.873	-1.186	-1.287	-0.947
84.0		-2.338	-1.117	-0.788	-0.818	-0.895
87.0		-2.385	-1.879	-0.863	-0.834	-1.010
88.0		-0.278	-0.328	-2.463	-1.707	0.420
93.0		-0.128	-0.250	-0.074	-0.792	0.100
96.0		-0.085	-0.440	0.373	-0.113	-1.227
100.0		-0.948	-0.888	-0.847	-0.880	-0.832
2.5	(LOWER)	0.418	0.521	0.398	0.357	0.494
5.0		0.318	0.474	0.530	0.508	0.494
10.0		0.453	0.536	0.415	0.543	0.373
24.0		0.203	0.300	0.278	0.213	0.208
33.0		0.280	0.251	0.237	0.212	0.152
54.0		0.229	0.102	0.133	0.014	-0.034
73.5		-0.108	0.134	0.184	0.175	0.020
84.0		0.309	0.329	0.573	0.303	0.151
96.0		0.248	0.249	1.345	0.237	0.108

RUN 100 POINT 11 ALPHA 18.03 PSI 0.00 HEIGHT 87.32

X/C, %		BP 2	BP 6	BP 12	BP 16	BP 22
0.0	(UPPER)	0.700	-2.986	-0.530	-3.000	-1.980
2.5		0.487	-1.444	-2.502	-3.087	-1.933
5.0		-0.700	-1.177	-2.095	-4.004	-1.878
10.0		-0.705	-0.904	-1.471	-3.295	-2.061
15.0		-0.709	-0.963	-1.122	-1.082	-1.890
24.0		-0.873	-0.747	-0.885	-0.880	-2.224
33.0		-0.750	-0.805	-0.728	-0.700	-2.471
54.0		-0.434	-0.574	-0.871	0.822	-1.305
65.0		-0.800	-0.707	-0.885	-0.881	-0.754
78.5		-0.901	-1.122	-1.122	-0.878	-1.140
79.5		-2.779	-2.607	-1.582	-2.254	-0.110
80.5		-1.943	-1.530	-0.568	-0.345	-0.114
81.5		-2.107	-1.051	-0.500	0.253	-0.513
82.0		-2.150	-1.482	-0.700	-0.741	-0.520
84.0		-1.837	-0.810	-0.334	-0.318	-0.690
87.0		-1.900	-1.211	-0.694	-0.418	-0.817
88.0		-0.274	-0.340	-2.434	-1.713	0.204
93.0		-0.125	-0.260	-0.085	-0.807	0.103
96.0		-0.087	-0.488	0.347	-0.141	-1.275
100.0		-0.817	-0.881	-0.798	-0.841	-0.834
2.5	(LOWER)	0.479	0.534	0.344	0.308	0.451
5.0		0.388	0.528	0.545	0.517	0.499
10.0		0.510	0.564	0.484	0.580	0.405
24.0		0.255	0.302	0.331	0.288	0.247
33.0		0.335	0.297	0.269	0.254	0.182
54.0		0.200	0.142	0.178	0.058	-0.010
73.5		-0.085	0.184	0.208	0.198	0.058
84.0		0.337	0.351	0.582	0.318	0.154
96.0		0.260	0.267	1.008	0.252	0.104

C-3

WING PRESSURE COEFFICIENTS

RUN 106 POINT 12 ALPHA 10.00 PSI 0.00 HEIGHT 00.00

X/C %		BP 2	BP 6	BP 12	BP 16	BP 22
0.0	(UPPER)	0.057	-4.173		-3.611	-1.000
2.5		0.552	-1.047	[illegible]	-3.357	-1.020
5.0		-0.007	-1.430	-3.032	-3.543	-1.747
10.0		-0.002	-1.081	-2.304	-3.761	-1.012
15.0		-0.013	-1.113	-1.560	-2.000	-1.000
20.0		-0.071	-0.000	-0.057	-1.002	-1.045
30.0		-0.032	-0.783	-0.670	-0.003	-2.001
50.0		-0.470	-0.031	-0.000	0.000	-2.010
65.0		-0.033	-0.782	-0.730	-0.041	-1.511
70.5		-0.004	-1.174	-1.107	-0.972	-1.500
75.5		-2.230	-1.040	-1.073	-1.614	0.370
80.5		-1.440	-1.006	-0.000	0.110	0.370
81.5		-1.021	-0.956	-0.030	0.010	-0.003
82.0		-1.014	-0.004	-0.104	-0.173	-0.043
84.0		-1.330	-0.110	0.120	0.701	-0.014
87.0		-1.000	-0.750	-0.070	0.000	-0.140
88.0		-0.797	-0.200	-2.500	-1.734	-0.005
93.0		-0.145	-0.281	-0.130	-0.015	0.002
96.0		-0.105	-0.483	0.310	-0.151	-1.372
100.0		-0.011	-0.001	-0.763	-0.000	-0.001
2.5	(LOWER)	0.525	0.531	0.320	0.271	0.000
5.0		0.404	0.570	0.504	0.517	0.400
10.0		0.550	0.010	0.501	0.500	0.433
20.0		0.302	0.400	0.274	0.340	0.271
30.0		0.374	0.350	0.324	0.305	0.100
50.0		0.200	0.174	0.305	0.004	0.003
70.5		0.035	0.100	0.22[illegible]	0.310	0.050
80.0		0.350	0.300	0.503	0.320	0.143
90.0		0.203	0.200	1.000	0.753	0.070

RUN 106 POINT 13 ALPHA 21.00 PSI 0.00 HEIGHT 00.00

X/C %		BP 2	BP 6	BP 12	BP 16	BP 22
0.0	(UPPER)	0.021	-5.329	-4.530	-3.035	-1.070
2.5		0.021	-2.000	-4.004	-3.037	-1.022
5.0		-1.050	-1.501	-4.079	-3.005	-1.757
10.0		-1.032	-1.210	-3.900	-3.413	-1.030
15.0		-1.070	-1.220	-1.000	-3.041	-1.707
20.0		-1.050	-0.954	-0.707	-2.700	-1.020
30.0		-0.002	-0.050	0.721	-1.510	-1.053
50.0		-0.504	-0.005	-0.740	1.035	-2.177
65.0		-0.040	-0.075	-0.771	-0.001	-1.700
70.5		-0.007	-1.100	-1.220	-1.000	-1.050
75.5		-1.053	-1.574	-0.052	-1.321	0.007
80.5		-1.104	-0.027	0.120	0.207	0.550
81.5		-1.302	-0.302	0.100	0.715	0.104
82.0		-1.302	-0.730	0.000	0.120	0.140
84.0		-1.003	0.122	0.330	0.572	0.170
87.0		-1.100	-0.517	0.210	0.700	0.075
88.0		-0.313	-0.277	-2.505	-1.000	-0.100
93.0		-0.150	-0.200	-0.104	-0.001	0.004
96.0		-0.110	-0.512	0.201	-0.212	-1.473
100.0		-0.002	-0.040	-0.774	-0.053	-0.071
2.5	(LOWER)	0.504	0.503	0.200	0.235	0.357
5.0		0.400	0.033	0.577	0.515	0.405
10.0		0.015	0.043	0.534	0.021	0.440
20.0		0.353	0.455	0.414	0.353	0.305
30.0		0.421	0.304	0.350	0.320	0.270
50.0		0.222	0.214	0.230	0.113	0.020
70.5		0.000	0.217	0.251	0.220	0.050
80.0		0.302	0.300	0.005	0.330	0.105
90.0		0.300	0.200	1.500	0.207	0.070

WING PRESSURE COEFFICIENTS

RUN 107 POINT 3 ALPHA -0.01 PSI 0.00 HEIGHT 00.23

X/C %		BP 2	BP 6	BP 12	BP 16	BP 22
0.0	(UPPER)	0.357	-0.040	0.104	0.071	0.502
2.5		0.121	0.207	-0.035	-0.214	-0.077
5.0		0.007	0.106	-0.025	-0.320	-0.450
10.0		0.274	-0.042	-0.150	-0.201	-0.075
15.0		0.170	0.130	-0.252	-0.183	-0.402
20.0		0.250	-0.007	-0.330	0.020	-0.243
30.0		0.111	-0.050	-0.304	-0.210	-0.212
50.0		-0.303	-0.300	-0.290	0.003	-0.006
65.0		-0.300	-0.075	-0.477	-0.550	-0.700
70.5		0.200	-1.250	-1.200	-1.425	-1.371
75.5		4.321	3.004	3.503	2.723	3.500
80.5		4.204	4.001	3.005	3.503	3.003
81.5		3.005	4.232	4.030	3.700	3.505
82.0		4.204	3.000	3.724	3.311	3.043
84.0		3.055	3.973	3.732	3.424	3.700
87.0		3.010	3.007	3.705	3.700	3.750
88.0		-0.425	-0.234	-4.004	-2.701	2.150
93.0		-0.130	-0.117	0.100	-0.050	-0.003
96.0		-0.099	-0.237	1.052	0.192	-1.440
100.0		-2.000	-2.000	-1.829	-1.019	-1.490
2.5	(LOWER)	-0.332	-0.503	-0.400	-0.122	-0.422
5.0		-0.203	-0.425	-0.400	-0.211	-0.250
10.0		-0.412	-0.402	-0.244	-0.355	-0.152
20.0		-0.105	-0.312	-0.190	-0.032	-0.230
30.0		-0.233	-0.220	-0.203	-0.130	-0.270
50.0		-0.203	-0.190	-0.110	-0.007	-0.000
70.5		-0.130	0.004	0.004	0.004	0.142
80.0		0.041	0.054	0.030	0.000	0.027
90.0		-0.174	-0.004	0.705	0.020	-0.022

RUN 107 POINT 4 ALPHA 4.02 PSI 0.00 HEIGHT 07.43

X/C %		BP 2	BP 6	BP 12	BP 16	BP 22
0.0	(UPPER)	0.315	0.223	0.205	0.200	-0.040
2.5		0.100	-0.073	-0.004	-0.775	-0.704
5.0		0.242	-0.001	-0.200	-0.740	-0.540
10.0		0.000	-0.201	-0.410	-0.474	-0.370
15.0		-0.057	-0.102	-0.577	-0.303	-0.725
20.0		0.003	-0.270	-0.510	-0.105	-0.342
30.0		0.001	-0.191	-0.510	-0.310	-0.300
50.0		-0.423	-0.303	-0.007	0.720	-0.497
65.0		-0.204	-0.742	-0.505	-0.012	-0.000
70.5		0.217	-1.254	-1.230	-1.003	-1.504
75.5		4.330	3.901	3.022	2.750	3.504
80.5		4.310	4.077	3.002	3.001	3.034
81.5		3.023	4.250	4.050	3.724	3.005
82.0		4.270	3.711	3.745	3.340	3.005
84.0		3.004	4.010	3.772	3.400	3.010
87.0		3.075	3.711	3.705	3.702	3.700
88.0		-0.000	-0.221	-0.071	-2.712	2.074
93.0		-0.100	-0.131	0.110	-0.020	-0.000
96.0		-0.000	-0.770	1.003	0.220	-1.500
100.0		-2.033	-2.031	-1.003	-1.007	-1.534
2.5	(LOWER)	-0.000	-0.255	0.014	0.310	0.044
5.0		-0.040	-0.290	-0.141	0.000	0.007
10.0		-0.310	-0.307	-0.050	-0.140	0.004
20.0		-0.002	-0.220	-0.071	0.112	-0.141
30.0		-0.200	-0.151	-0.104	-0.032	-0.228
50.0		-0.222	-0.035	-0.055	-0.017	-0.000
70.5		-0.100	0.130	0.105	0.130	0.115
80.0		0.000	0.003	0.000	0.[illegible]0	0.017
90.0		-0.102	0.054	0.753	0.052	-0.032

WING PRESSURE COEFFICIENTS

RUN 107 POINT 5 ALPHA 8.00 PSI 0.00 HEIGHT 05.34

X/C, %		SP 2	SP 6	SP 12	SP 16	SP 22
0.0	UPPER	0.220	0.240	-0.587	-1.100	-2.120
2.5		0.240	-0.420	-1.070	-1.331	-1.860
5.0		0.045	-0.240	-0.870	-1.174	-1.450
10.0		-0.114	-0.544	-0.880	-0.700	-0.882
15.0		-0.251	-0.215	-0.793	-0.813	-0.840
20.0		-0.251	-0.402	-0.853	-0.243	-0.511
30.0		-0.185	-0.330	-0.871	-0.638	-0.422
50.0		-0.083	-0.480	-0.668	-0.734	-0.820
65.0		-0.046	-0.810	-0.580	-0.875	-1.022
78.5		0.230	-1.200	-1.194	-1.082	-1.860
79.5		4.830	4.211	3.867	3.104	3.940
80.5		4.867	4.302	4.212	3.818	3.954
81.5		4.221	4.545	4.300	4.035	3.990
82.0		4.582	4.630	4.000	3.730	4.040
84.0		4.297	4.330	4.008	3.843	4.130
87.0		4.110	4.070	4.012	4.029	4.074
89.0		-0.402	-0.325	-0.500	-2.753	3.864
93.0		-0.185	-0.107	0.133	-0.045	-0.080
96.0		-0.080	-0.080	1.058	0.240	-1.730
100.0		.037	-2.015	-1.040	-1.973	-1.882
2.5	LOWER	0.120	-0.007	0.270	0.584	0.750
5.0		0.134	-0.183	0.064	0.319	0.305
10.0		-0.242	-0.113	0.121	0.015	0.285
20.0		-0.086	-0.124	0.037	0.240	-0.054
30.0		-0.180	-0.074	-0.021	0.081	-0.181
50.0		-0.181	0.035	0.045	0.047	-0.054
73.5		-0.050	0.150	0.168	0.151	0.143
84.0		0.130	0.123	0.084	0.100	-0.015
96.0		-0.128	-0.070	0.780	0.079	-0.054

WING PRESSURE COEFFICIENTS

RUN 107 POINT 13 ALPHA 21.00 PSI 0.00 HEIGHT 57.13

X/C, %		SP 2	SP 6	SP 12	SP 16	SP 22
0.0	UPPER	0.250	-4.723	-4.041	-2.970	-1.000
2.5		0.195	-2.001	-5.183	-3.800	-2.185
5.0		-0.050	-1.587	-5.250	-4.039	-2.000
10.0		-1.010	-1.002	-3.843	-4.008	-2.052
15.0		-1.105	-1.181	-1.200	-4.108	-2.582
20.0		-0.013	-1.108	-1.184	-1.943	-2.335
30.0		-0.072	-0.875	-1.140	-0.949	-2.453
50.0		-0.060	-0.941	-0.780	0.748	-2.058
65.0		-0.709	-1.251	-0.874	-0.878	-2.475
78.5		0.223	-1.440	-1.307	-1.756	-2.563
79.5		4.578	4.130	3.867	3.150	3.981
80.5		4.957	4.311	4.174	3.833	3.921
81.5		4.147	4.480	4.290	3.931	3.782
82.0		4.531	3.960	4.030	3.730	3.957
84.0		4.243	4.337	4.043	3.879	4.050
87.0		4.054	3.950	3.811	3.944	3.990
89.0		-0.583	-0.378	-4.000	-3.141	0.886
93.0		-0.370	-0.333	-0.000	-1.247	-0.100
96.0		-0.180	-1.011	0.070	-0.083	-2.182
100.0		-1.005	-1.020	-1.770	-1.971	-1.812
2.5	LOWER	0.034	0.200	0.200	0.440	0.070
5.0		0.071	0.207	0.274	0.587	0.412
10.0		0.181	0.252	0.498	0.314	0.530
20.0		0.202	0.304	0.385	0.012	0.104
30.0		0.087	0.333	0.295	0.274	-0.040
50.0		0.023	0.200	0.252	0.318	0.080
73.5		0.200	0.414	0.237	0.318	0.198
84.0		0.200	0.250	0.781	0.183	-0.020
96.0		-0.023	0.074	1.024	0.140	-0.081

RUN 107 POINT 8 ALPHA 11.00 PSI 0.00 HEIGHT 06.14

X/C, %		SP 2	SP 6	SP 12	SP 16	SP 22
0.0	UPPER	0.350	-0.253	-2.302	-2.050	-1.720
2.5		0.213	-0.842	-1.540	-2.310	-1.982
5.0		-0.170	-0.844	-1.101	-2.040	-1.810
10.0		-0.220	-0.792	-0.881	-0.910	-1.225
15.0		-0.476	-0.500	-1.030	-0.791	-1.074
20.0		-0.300	-0.870	-0.872	-0.271	-1.250
30.0		-0.280	-0.482	-0.763	-0.563	-1.007
50.0		-0.027	-0.027	-0.542	0.720	-0.005
65.0		-0.474	-0.826	-0.040	-0.750	-1.232
78.5		0.237	-1.395	-1.180	-1.510	-1.630
79.5		4.707	4.291	4.043	3.291	4.001
80.5		4.870	4.457	4.297	3.997	4.041
81.5		4.204	4.612	4.438	4.112	3.981
82.0		4.050	4.115	4.157	3.835	4.100
84.0		4.271	4.436	4.188	3.937	4.213
87.0		4.203	4.130	4.000	4.105	4.150
89.0		-0.490	-0.247	-4.530	-2.785	1.750
93.0		-0.123	-0.176	0.100	-0.950	-0.540
96.0		-0.066	-0.835	1.031	0.100	-1.837
100.0		-1.880	-1.972	-1.836	-1.830	-1.880
2.5	LOWER	0.221	0.105	0.413	0.646	0.760
5.0		0.280	-0.033	0.213	0.454	0.203
10.0		-0.078	0.034	0.200	0.154	0.272
20.0		0.101	-0.070	0.153	0.250	0.013
30.0		-0.117	0.072	0.078	0.155	-0.104
50.0		-0.116	0.102	0.071	0.124	-0.075
73.5		0.005	0.257	0.211	0.212	0.140
84.0		0.164	0.106	0.721	0.130	-0.027
96.0		-0.160	-0.007	0.785	0.090	-0.054

RUN 100 POINT 3 ALPHA 0.03 PSI 0.00 HEIGHT 00.08

X/C, %		SP 2	SP 6	SP 12	SP 16	SP 22
0.0	UPPER	-0.223	-0.047	-0.511	1.007	0.000
2.5		-0.375	0.188	-0.170	-0.507	-0.181
5.0		0.786	0.027	0.123	-0.811	-1.095
10.0		1.027	0.173	-0.148	-0.290	0.191
15.0		0.993	.705	-0.745	-0.188	-1.012
20.0		1.043	-0.050	0.034	0.457	-0.177
30.0		0.546	0.050	-0.731	-0.180	-0.110
50.0		-0.066	-0.510	-0.281	0.687	-0.726
65.0		-0.483	-1.220	-0.507	-0.051	-1.581
78.5		0.451	-1.054	-1.000	-2.050	-2.453
79.5		7.863	8.031	8.253	4.500	8.024
80.5		7.500	7.672	8.003	8.119	8.150
81.5		6.773	7.468	8.005	8.282	8.170
82.0		7.520	8.300	8.472	5.047	8.181
84.0		8.000	8.011	8.440	5.021	8.550
87.0		8.500	8.374	8.302	8.260	8.500
89.0		-0.741	-0.663	-0.271	-5.484	4.754
93.0		0.604	0.043	0.500	-1.852	-0.287
96.0		0.615	-1.478	2.500	0.879	-2.766
100.0		-3.900	-4.030	-3.790	-4.042	-3.058
2.5	LOWER	-0.314	-0.019	-0.568	0.124	-0.784
5.0		-0.138	-0.030	-0.778	-0.215	-0.333
10.0		-0.012	-0.090	-0.241	-0.712	-0.081
20.0		-0.226	-0.053	-0.200	0.238	-0.390
30.0		-0.703	-0.456	-0.232	-0.118	-0.060
50.0		-0.000	-0.051	-0.150	0.007	-0.030
73.5		0.015	0.250	0.141	0.108	0.202
84.0		-0.005	-0.138	1.027	-0.187	-0.290
96.0		-0.758	-0.405	0.880	-0.197	-0.283

WING PRESSURE COEFFICIENTS

RUN 100 POINT 4 ALPHA 3.99 PSI 0.00 HEIGHT 85.03

X/C %		SP 2	SP 8	SP 12	SP 16	SP 22
0.0	UPPER	-0.142	-0.195	0.950	0.930	0.070
2.5		-0.250	-0.168	-0.785	-1.130	-0.010
5.0		0.540	0.004	-0.411	-1.100	-1.005
10.0		0.519	-0.308	-0.587	-0.943	-0.131
15.0		0.522	0.207	-1.105	-0.279	-1.900
20.0		0.910	-0.237	-0.918	0.247	-0.339
30.0		0.464	-0.037	-0.948	-0.286	-0.313
50.0		-0.887	-0.571	-0.281	0.730	-0.821
65.0		-0.475	-1.373	-0.641	-0.915	-1.003
78.5		0.479	-1.000	-1.037	-2.533	-2.570
79.5		7.877	8.049	8.301	4.714	5.100
80.5		7.563	7.000	8.734	8.157	5.200
81.5		8.000	7.410	7.034	6.304	6.300
82.0		7.530	6.414	6.958	5.745	6.239
84.0		6.877	6.363	6.994	5.941	6.500
87.0		6.613	5.395	5.300	5.301	6.500
90.0		-0.700	-0.040	-5.449	-5.287	4.553
93.0		0.013	0.010	0.532	-1.562	-0.204
96.0		0.030	-1.504	2.472	0.056	-2.054
100.0		-3.830	-3.530	-3.681	-4.000	-3.030
2.5	LOWER	-0.104	-0.834	-0.110	0.550	-0.201
5.0		0.075	-0.795	-0.068	0.005	0.017
10.0		-0.017	-0.700	-0.147	-0.567	0.101
20.0		-0.140	-0.544	-0.104	0.272	-0.201
30.0		-0.700	-0.373	-0.247	-0.030	-0.547
50.0		-0.005	0.001	-0.007	0.190	-0.010
73.5		0.050	0.300	0.101	0.180	0.335
84.0		-0.010	-0.107	1.010	-0.170	-0.105
96.0		-0.732	-0.436	0.070	-0.195	-0.270

RUN 100 POINT 8 ALPHA 11.99 PSI 0.00 HEIGHT 85.31

X/C %		SP 2	SP 8	SP 12	SP 16	SP 22
0.0	UPPER	-0.110	-0.131	-2.014	-2.453	-1.700
2.5		-0.312	-0.525	-1.042	-3.673	-1.795
5.0		0.102	-0.638	-1.160	-2.001	-2.907
10.0		-0.357	-1.100	-1.130	-1.042	-1.005
15.0		-0.360	-0.305	-1.508	-0.700	-2.384
20.0		0.330	-0.787	-1.305	0.074	-1.342
30.0		0.102	-0.007	-1.241	-0.527	-0.004
50.0		-1.101	-0.704	-0.575	0.700	-1.207
65.0		-0.523	-1.053	-0.702	-1.050	-1.002
78.5		0.510	-1.003	-1.075	-2.401	-2.021
79.5		5.107	7.341	8.011	5.270	5.705
80.5		6.050	7.500	7.230	8.050	6.732
81.5		7.375	7.005	7.520	6.077	6.073
82.0		6.033	6.075	6.983	6.314	6.700
84.0		7.452	7.540	7.023	6.545	7.605
87.0		7.600	6.513	5.004	6.002	5.001
90.0		-0.750	-0.007	-5.700	-5.055	4.250
93.0		-0.010	-0.004	0.587	-1.447	-0.200
96.0		0.004	-1.503	2.374	0.072	-2.504
100.0		-3.750	-3.072	-3.050	-3.001	-3.170
2.5	LOWER	0.324	-0.147	0.348	0.830	-0.040
5.0		0.370	-0.541	-0.100	0.450	0.340
10.0		-0.000	-0.054	0.105	-0.211	0.470
20.0		0.050	-0.305	0.071	0.052	-0.122
30.0		-0.500	-0.104	-0.040	0.100	-0.475
50.0		-0.564	0.170	0.051	0.344	0.043
73.5		0.222	0.472	0.301	0.270	0.204
84.0		0.001	-0.022	1.070	-0.066	-0.240
96.0		-0.660	-0.207	0.005	-0.090	-0.715

RUN 100 POINT 5 ALPHA 7.99 PSI 0.00 HEIGHT 85.20

X/C %		SP 2	SP 8	SP 12	SP 16	SP 22
0.0	UPPER	-0.100	0.100	-0.510	-0.605	-2.040
2.5		-0.204	-0.520	-1.340	-1.044	-2.307
5.0		0.343	-0.300	-0.700	-1.037	-2.004
10.0		0.100	-0.787	-0.520	-0.834	-0.437
15.0		0.061	-0.070	-1.317	-0.500	-1.501
20.0		0.005	-0.522	-1.060	0.214	-0.512
30.0		0.202	-0.220	-1.110	-0.300	-0.352
50.0		-1.075	-0.001	-0.007	0.740	-0.972
65.0		-0.467	-1.347	-0.702	-0.070	-1.033
78.5		0.500	-1.000	-1.707	-2.420	-2.700
79.5		7.957	7.107	6.000	5.120	5.097
80.5		7.090	7.430	7.000	6.512	6.575
81.5		7.175	7.740	7.375	6.730	6.502
82.0		7.005	6.700	6.825	6.151	6.010
84.0		7.278	7.310	6.000	6.352	6.951
87.0		6.027	6.730	6.715	6.710	6.055
90.0		-0.712	-0.057	-0.934	-5.009	4.300
93.0		0.023	-0.040	0.560	-1.477	-0.273
96.0		0.040	-1.545	2.300	0.000	-2.037
100.0		-3.041	-3.020	-3.029	-4.050	-3.041
2.5	LOWER	0.123	-0.257	0.104	0.075	-0.053
5.0		0.194	-0.072	-0.175	0.311	0.242
10.0		-0.713	-0.156	0.020	-0.320	0.350
20.0		-0.040	-0.467	0.050	0.510	-0.104
30.0		-0.637	-0.305	[illegible]	0.070	-0.505
50.0		-0.006	0.092	-0.010	0.243	0.017
73.5		0.170	0.201	0.241	0.203	0.224
84.0		0.013	-0.006	1.040	-0.090	-0.230
96.0		-0.710	-0.402	0.037	-0.170	-0.202

RUN 110 POINT 3 ALPHA -0.02 PSI 0.00 HEIGHT 87.08

X/C %		SP 2	SP 8	SP 12	SP 16	SP 22
0.0	UPPER	0.520	0.571	0.587	0.500	0.434
2.5		0.414	-0.040	0.002	0.035	0.143
5.0		-0.050	-0.070	-0.002	-0.070	0.017
10.0		-0.108	-0.110	-0.174	-0.113	-0.007
15.0		-0.120	-0.130	-0.110	-0.135	-0.074
20.0		-0.130	-0.110	-0.109	-0.140	-0.111
30.0		-0.102	-0.115	-0.103	-0.117	-0.114
50.0		-0.080	-0.107	-0.175	0.057	-0.005
65.0		-0.140	-0.140	-0.183	-0.140	-0.080
78.5		0.071	-0.230	-0.237	-0.290	-0.250
79.5		-102.047	-83.770	-81.904	-73.373	-82.941
80.5		-93.781	-83.010	-81.275	-80.075	-80.421
81.5		-71.533	-101.343	-80.002	-80.910	-84.373
82.0		-90.070	-74.300	-78.334	-78.491	-75.004
84.0		-80.004	-87.050	-78.210	-79.001	-75.447
87.0		-74.577	-74.300	-13.075	-82.295	-80.900
89.0		-0.004	-0.145	-0.187	-0.205	-0.133
93.0		-0.055	-0.070	-0.100	-0.154	0.104
96.0		-0.013	-0.017	-0.050	-0.071	0.003
100.0		0.010	0.040	0.040	0.035	0.000
2.5	LOWER	-0.001	-0.120	-0.173	-0.233	-0.317
5.0		-0.087	-0.080	-0.130	-0.174	-0.255
10.0		-0.080	-0.095	-0.130	-0.170	-0.211
20.0		-0.105	-0.115	-0.100	-0.155	-0.125
30.0		-0.070	-0.071	-0.100	-0.102	-0.047
50.0		-0.044	-0.066	-0.072	-0.090	-0.050
73.5		-0.002	0.047	0.100	0.110	0.124
84.0		0.155	0.215	0.187	0.230	0.202
96.0		0.100	0.210	0.006	0.223	0.211

WING PRESSURE COEFFICIENTS

RUN 110 POINT 8 ALPHA 3.99 PSI 0.00 HEIGHT 80.00

X/C, %		BP 2	BP 6	BP 12	BP 16	BP 22
0.0	(UPPER)	0.735	0.239	0.138	-0.022	0.170
2.5		0.537	-0.366	-0.487	-0.482	-0.482
5.0		-0.385	-0.388	-0.456	-0.340	-0.290
10.0		-0.346	-0.295	-0.377	-0.411	-0.472
15.0		-0.315	-0.387	-0.237	-0.386	-0.184
24.0		-0.360	-0.212	-0.160	-0.453	-0.281
33.0		-0.271	-0.235	-0.135	-0.271	-0.290
54.0		-0.015	-0.153	-0.246	0.060	-0.107
65.0		-0.228	-0.173	-0.289	-0.190	0.025
78.5		-0.036	-0.445	[illegible]	-0.244	-0.304
79.5		-85.210	-70.300	[illegible]	-81.879	-66.580
80.5		-77.092	-68.037	-67.274	-56.080	-57.159
81.5		-50.789	-63.929	-72.477	-55.743	-54.260
82.0		-62.505	-61.980	-65.723	-64.947	-60.229
84.0		-66.903	-72.300	-63.599	-58.036	-63.295
87.0		-62.187	-63.048	-61.374	-66.020	-59.783
89.0		-0.021	-0.143	-0.144	-0.183	-0.140
93.0		-0.004	-0.063	-0.080	-0.245	0.129
96.0		-0.046	0.061	-0.067	-0.008	-0.037
100.0		0.042	0.080	0.082	0.071	-0.030
2.5	(LOWER)	0.195	0.294	0.219	0.137	0.264
5.0		0.080	0.211	0.224	0.129	0.100
10.0		0.207	0.200	0.070	0.184	-0.020
24.0		-0.021	0.063	0.006	-0.136	-0.037
33.0		0.003	0.032	-0.006	-0.045	0.010
54.0		0.002	-0.007	-0.048	-0.161	-0.104
73.5		-0.050	-0.016	0.000	0.080	0.051
84.0		0.180	0.252	0.239	0.271	0.215
96.0		0.308	0.260	1.313	0.213	0.210

WING PRESSURE COEFFICIENTS

RUN 110 POINT 12 ALPHA 11.99 PSI 0.00 HEIGHT 87.33

X/C, %		BP 2	BP 6	BP 12	BP 16	BP 22
0.0	(UPPER)	0.776	-3.300	-4.493	-3.383	-1.274
2.5		0.560	-1.550	-1.980	-3.550	-1.052
5.0		-1.011	-1.183	-1.636	-2.447	-0.874
10.0		-0.760	-0.754	-1.067	-1.057	-1.107
15.0		-0.843	-0.755	-0.682	-0.833	-0.855
24.0		-0.801	-0.477	-0.488	0.737	-0.932
33.0		-0.441	-0.425	-0.367	-0.477	-0.815
54.0		-0.070	-0.243	-0.380	0.044	-0.394
65.0		-0.275	-0.229	-0.255	-0.250	-0.180
78.5		-0.045	-0.480	-0.480	-0.261	-0.208
79.5		-85.600	-54.532	-49.900	-46.390	-51.367
80.5		-50.107	-53.867	-50.587	-43.600	-43.287
81.5		-46.233	-64.433	-55.887	-41.067	-42.233
82.0		-67.533	-47.587	-48.733	-46.533	-50.367
84.0		-51.433	-51.587	-47.933	-42.067	-46.433
87.0		-47.060	-46.080	-47.733	-52.567	-45.567
89.0		-0.021	-0.141	-0.120	-0.188	-0.223
93.0		-0.071	-0.087	-0.062	-0.231	0.119
96.0		-0.040	0.071	-0.105	-0.090	-0.195
100.0		0.045	0.080	0.090	0.031	-0.262
2.5	(LOWER)	0.501	0.855	0.556	0.482	0.817
5.0		0.457	0.549	0.614	0.526	0.453
10.0		0.530	0.947	0.616	0.524	0.268
24.0		0.203	0.216	0.248	0.106	0.145
33.0		0.295	0.234	0.197	0.149	0.127
54.0		0.239	0.044	0.070	-0.060	-0.071
73.5		0.015	0.055	0.116	0.130	0.032
84.0		0.240	0.304	0.264	0.290	0.181
96.0		0.300	0.295	1.372	0.207	0.118

RUN 110 POINT 10 ALPHA 8.02 PSI 0.00 HEIGHT 80.91

X/C, %		BP 2	BP 6	BP 12	BP 16	BP 22
0.0	(UPPER)	0.750	-1.083	-1.543	-1.870	-1.750
2.5		0.548	-0.982	-1.058	-1.199	-1.299
5.0		-0.677	-0.743	-0.882	-0.823	-0.882
10.0		-0.550	-0.503	-0.688	-0.730	-0.798
15.0		-0.470	-0.550	-0.431	-0.821	-0.381
24.0		-0.484	-0.249	-0.231	-0.613	-0.438
33.0		-0.300	-0.233	-0.243	-0.602	-0.402
54.0		-0.048	-0.193	-0.300	0.018	-0.200
65.0		-0.253	-0.150	-0.317	-0.250	-0.070
78.5		-0.038	-0.452	-0.480	-0.258	-0.283
79.5		-74.077	-81.984	-58.418	-54.738	-50.750
80.5		-67.752	-81.362	-58.518	-49.351	-49.887
81.5		-52.496	-73.473	-63.972	-47.845	-47.812
82.0		-72.168	-54.370	-57.314	-56.243	-57.910
84.0		-58.619	-61.887	-55.240	-50.221	-55.607
87.0		-54.603	-54.035	-53.001	-60.256	-52.195
89.0		-0.019	-0.138	-0.142	-0.180	-0.230
93.0		-0.065	-0.078	-0.097	-0.216	0.122
96.0		-0.044	0.072	-0.101	-0.083	-0.113
100.0		0.043	0.087	0.073	0.046	-0.100
2.5	(LOWER)	0.434	0.530	0.473	0.382	0.550
5.0		0.290	0.391	0.456	0.360	0.356
10.0		0.381	0.488	0.250	0.268	0.187
24.0		0.094	0.184	0.126	-0.005	0.072
33.0		0.187	0.130	0.093	0.056	0.078
54.0		0.147	-0.038	0.010	-0.116	-0.099
73.5		-0.029	0.015	0.088	0.110	0.056
84.0		0.187	0.274	0.249	0.281	0.201
96.0		0.335	0.273	1.339	0.200	0.174

RUN 110 POINT 17 ALPHA 21.99 PSI 0.00 HEIGHT 97.99

X/C, %		BP 2	BP 6	BP 12	BP 16	BP 22
0.0	(UPPER)	0.821	-1.197	-0.955	-1.118	-0.812
2.5		0.867	-1.090	-0.852	-0.795	-0.727
5.0		-1.423	-1.195	-0.983	-0.781	-0.950
10.0		-1.359	-1.663	-0.950	-0.885	-0.853
15.0		-1.298	-1.747	-0.837	-0.918	-0.952
24.0		-1.354	-1.060	-0.863	-1.070	-0.782
33.0		-1.068	-1.073	-0.850	-0.933	-0.821
54.0		-0.661	-0.804	-0.874	0.986	-0.679
65.0		-0.605	-0.785	-0.925	-0.816	-0.500
78.5		-0.170	-0.783	-0.924	-0.700	-0.581
79.5		-50.839	-63.172	-62.332	-60.980	-63.604
80.5		-47.875	-66.563	-61.324	-38.253	-35.693
81.5		-37.839	-52.464	-48.090	-38.252	-38.167
82.0		-50.135	-38.809	-60.485	-40.250	-41.190
84.0		-40.014	-41.291	-39.208	-35.648	-40.115
87.0		-38.845	-41.482	-40.418	-44.751	-38.704
89.0		-0.230	-0.490	-0.563	-0.879	-0.849
93.0		-0.376	-0.441	-0.863	-0.757	0.055
96.0		-0.218	-0.278	-0.952	-0.889	-0.550
100.0		-0.625	-0.292	-0.499	-0.614	-0.095
2.5	(LOWER)	0.751	0.717	0.588	0.442	0.581
5.0		0.663	0.730	0.899	0.564	0.500
10.0		0.772	0.790	0.545	0.832	0.287
24.0		0.363	0.477	0.361	0.219	0.230
33.0		0.443	0.370	0.300	0.242	0.183
54.0		0.300	0.116	0.117	-0.044	-0.083
73.5		0.091	0.040	0.074	0.084	-0.045
84.0		0.236	0.273	0.182	0.171	0.058
96.0		0.343	0.175	1.425	-0.072	-0.103

WING PRESSURE COEFFICIENTS

RUN 120 POINT 2 ALPHA -0.01 PSI 0.00 HEIGHT 90.95

X/C, %		BP 2	BP 6	BP 12	BP 16	BP 22
0.0	UPPER	0.010	0.020	0.010	0.274	0.003
2.5		0.567	0.075	0.067	0.005	0.017
5.0		-0.183	-0.004	-0.135	0.072	0.140
10.0		-0.198	-0.006	-0.150	-0.105	-0.244
15.0		-0.202	-0.200	0.000	-0.257	0.056
24.0		-0.391	-0.141	-0.053	-0.083	-0.230
33.0		-0.284	-0.223	-0.000	-0.283	-0.310
54.0		0.035	-0.183	-0.338	1.023	-0.135
65.0		-0.368	-0.270	-0.436	-0.310	0.020
78.5		-0.098	-0.071	-0.053	-0.077	-0.086
79.5		-100.365	-90.202	-90.073	-90.475	-90.005
80.5		-101.047	-91.023	-88.544	-72.527	-75.093
81.5		-77.227	-100.221	-88.330	-86.077	-76.283
82.0		-100.743	-81.387	-63.120	-88.101	-87.503
84.0		-88.730	-94.732	-82.035	-81.052	-83.793
87.0		-81.272	-83.080	-75.750	88.004	-75.047
88.0		0.187	-0.076	1.200	-1.103	1.282
93.0		0.120	0.147	0.023	-0.701	0.354
96.0		0.048	-0.070	0.704	0.250	-0.401
100.0		-1.075	-0.950	-0.072	-0.795	-0.701
2.5	LOWER	-0.133	-0.005	-0.100	-0.332	-0.110
5.0		-0.180	0.115	0.013	-0.170	-0.305
10.0		0.117	0.004	-0.134	0.014	-0.283
24.0		-0.142	0.000	-0.105	-0.312	-0.105
33.0		0.066	-0.020	-0.002	-0.183	-0.008
54.0		0.101	-0.183	-0.106	-0.280	-0.160
73.5		-0.304	-0.100	-0.004	0.034	-0.015
84.0		0.125	0.229	0.540	0.280	0.221
96.0		0.223	0.108	1.564	0.145	0.183

RUN 120 POINT 4 ALPHA 3.00 PSI 0.00 HEIGHT 88.89

X/C, %		BP 2	BP 6	BP 12	BP 16	BP 22
0.0	UPPER	0.010	0.132	-0.040	-0.277	-0.105
2.5		0.514	-0.429	-0.534	-0.580	-0.083
5.0		-0.485	-0.458	-0.579	-0.602	-0.340
10.0		-0.428	-0.287	-0.438	-0.500	-0.040
15.0		-0.200	-0.460	-0.217	-0.005	-0.183
24.0		-0.517	-0.279	-0.208	-0.050	-0.090
33.0		-0.297	-0.337	-0.185	-0.420	-0.020
54.0		-0.030	-0.258	-0.021	1.021	-0.271
65.0		-0.421	-0.335	-0.511	-0.300	-0.050
78.5		-0.101	-0.023	-1.023	-0.051	-0.017
79.5		-119.260	-98.572	-99.013	-100.000	-87.005
80.5		-111.524	-100.577	-96.706	-72.033	-71.035
81.5		-84.235	-119.315	-105.031	-75.343	-77.303
82.0		-118.500	-88.010	-84.124	-103.020	-95.045
84.0		-95.073	-103.150	-81.256	-88.300	-80.778
87.0		-88.579	-88.201	-87.300	-88.420	-84.004
88.0		0.179	-0.090	-1.329	-1.183	1.103
93.0		0.120	0.137	0.300	-0.752	0.150
96.0		0.030	-0.007	0.705	0.201	-0.505
100.0		-1.030	-0.057	-0.830	-0.007	-0.763
2.5	LOWER	0.183	0.353	0.237	0.105	0.179
5.0		0.055	0.307	0.288	0.142	0.130
10.0		0.282	0.261	0.075	0.248	-0.038
24.0		-0.030	0.110	0.013	-0.101	-0.000
33.0		0.151	0.000	0.002	-0.007	0.049
54.0		0.152	-0.114	-0.002	-0.351	-0.181
73.5		-0.284	-0.000	0.010	0.055	-0.037
84.0		0.153	0.253	0.573	0.270	0.210
96.0		0.240	0.210	1.551	0.150	0.145

WING PRESSURE COEFFICIENTS

RUN 120 POINT 5 ALPHA 6.03 PSI 0.00 HEIGHT 87.34

X/C, %		BP 2	BP 6	BP 12	BP 16	BP 22
0.0	UPPER	0.027	-1.363	-1.995	-2.561	-2.592
2.5		0.537	-0.977	-1.267	-1.271	-1.451
5.0		-0.790	-0.841	-1.029	-0.022	-0.900
10.0		-0.844	-0.520	-0.770	-0.072	-1.030
15.0		-0.595	-0.681	-0.600	-0.773	-0.448
24.0		-0.545	-0.418	-0.278	-0.045	-0.507
33.0		-0.483	-0.430	-0.307	-0.500	-0.500
54.0		-0.077	-0.315	-0.503	1.040	-0.355
65.0		-0.450	-0.304	-0.573	-0.480	-0.101
78.5		-0.111	-0.080	-1.000	-0.730	-0.705
79.5		-105.630	-87.707	-80.563	-84.041	-85.141
80.5		-88.713	-88.344	-84.090	-70.041	-72.500
81.5		-75.195	-105.044	-83.742	-85.587	-88.805
82.0		-104.704	-79.010	-83.130	-81.250	-84.000
84.0		-84.375	-88.535	-81.314	-77.273	-80.453
87.0		-78.605	-75.087	-77.107	87.193	-75.073
88.0		0.103	-0.100	-1.405	-1.242	1.080
93.0		0.130	0.111	0.338	-0.736	0.147
96.0		0.041	-0.105	0.700	0.230	-0.704
100.0		-1.010	-0.831	-0.704	-0.816	-0.830
2.5	LOWER	0.417	0.500	0.450	0.320	0.810
5.0		0.253	0.481	0.500	0.367	0.370
10.0		0.457	0.500	0.200	0.430	0.152
24.0		0.077	0.235	0.125	-0.068	0.060
33.0		0.350	0.154	0.103	0.034	0.103
54.0		0.214	-0.053	-0.001	-0.202	-0.154
73.5		-0.261	-0.047	0.045	0.075	-0.044
84.0		0.100	0.201	0.510	0.290	0.105
96.0		0.398	0.244	1.570	0.105	0.110

RUN 120 POINT 8 ALPHA 11.00 PSI 0.00 HEIGHT 85.70

X/C, %		BP 2	BP 6	BP 12	BP 16	BP 22
0.0	UPPER	0.075	-3.033	-5.301	-3.424	-1.660
2.5		0.561	-1.701	-2.227	-2.443	-1.274
5.0		-1.183	-1.314	-1.082	-2.330	-0.900
10.0		-0.884	-0.875	-1.190	-2.413	-1.422
15.0		-0.756	-0.917	-0.785	-1.733	-0.954
24.0		-0.700	-0.582	-0.540	-1.040	-1.185
33.0		-0.600	-0.500	-0.474	-0.824	-1.183
54.0		-0.120	-0.391	-0.003	1.102	-0.750
65.0		-0.005	-0.950	-0.047	-0.482	-0.480
78.5		-0.123	-0.983	-1.177	-0.700	-0.021
79.5		-88.300	-72.040	-74.040	-77.447	-98.933
80.5		-80.023	-72.002	-60.210	-58.225	-58.790
81.5		-81.924	-85.377	-75.012	-52.072	-55.000
82.0		-85.185	-84.031	-87.000	-73.474	-65.933
84.0		-88.033	-76.702	-80.352	-81.524	-85.826
87.0		-84.387	-84.344	-83.000	-71.180	-81.050
88.0		0.173	-0.115	-1.458	-1.280	0.071
93.0		0.110	0.040	0.307	-0.781	0.129
96.0		0.020	-0.123	0.004	0.100	-0.041
100.0		-0.906	-0.099	-0.787	-0.800	-0.932
2.5	LOWER	0.505	0.675	0.513	0.381	0.040
5.0		0.430	0.630	0.054	0.504	0.454
10.0		0.610	0.710	0.410	0.505	0.230
24.0		0.100	0.397	0.253	0.045	0.140
33.0		0.350	0.257	0.205	0.130	0.142
54.0		0.390	0.020	0.002	-0.141	-0.140
73.5		-0.222	-0.001	0.000	0.104	-0.050
84.0		0.230	0.221	0.670	0.312	0.165
96.0		0.513	0.281	1.673	0.177	0.095

WING PRESSURE COEFFICIENTS

RUN 120 POINT 13 ALPHA 23.00 PSI 0.00 HEIGHT 98.10

X/C, %		BP 2	BP 6	BP 12	BP 16	BP 22
0.0	(UPPER)	1.022	-4.100	-2.453	-2.271	-1.587
2.5		0.895	-3.000	-2.390	-1.792	-1.487
5.0		-2.673	-4.134	-2.478	-1.752	-1.301
10.0		-1.605	-3.004	-2.481	-1.838	-1.645
15.0		-1.006	-3.347	-2.324	-1.973	-1.180
20.0		-1.342	-1.234	-2.504	-2.230	-1.405
30.0		-0.863	-0.882	-2.337	-2.144	-1.503
50.0		-0.300	-0.530	-1.482	1.277	-1.392
65.0		-0.863	-0.581	-0.884	-1.750	-1.055
70.5		-0.131	-1.048	-0.984	-1.344	-1.500
78.5		-80.377	-50.530	-53.446	-52.293	-46.261
80.5		-55.405	-51.008	-45.160	-40.745	-39.948
81.5		-43.803	-50.036	-52.155	-36.250	-40.271
82.0		-58.848	-44.823	-46.476	-40.287	-47.700
84.0		-47.184	-45.525	-44.531	-40.501	-45.017
87.0		-48.045	-46.232	-44.731	-40.526	-43.436
89.0		0.290	-0.173	-1.551	-1.804	-0.379
93.0		0.290	0.027	0.284	-1.220	0.126
98.0		0.087	-0.181	0.627	-0.200	-1.683
100.0		-0.901	-0.875	-0.763	-0.838	-1.313
2.5	(LOWER)	0.624	0.563	0.415	0.253	0.524
5.0		0.710	0.887	0.741	0.559	0.518
10.0		0.820	0.875	0.860	0.755	0.604
20.0		0.425	0.613	0.481	0.290	0.339
30.0		0.578	0.406	0.411	0.315	0.295
50.0		0.483	0.202	-0.226	-0.003	-0.045
70.5		-0.083	0.175	0.176	0.161	-0.041
80.0		0.337	0.417	0.757	0.250	0.132
98.0		0.527	0.266	2.140	0.176	-0.022

RUN 121 POINT 4 ALPHA 3.00 PSI 0.00 HEIGHT 98.17

X/C, %		BP 2	BP 6	BP 12	BP 16	BP 22
0.0	(UPPER)	1.510	0.117	-0.112	-0.783	-0.387
2.5		0.842	-0.333	-0.433	0.520	-0.828
5.0		-0.841	-0.500	-0.870	-0.200	-0.197
10.0		-0.517	-0.153	-0.470	-0.585	-0.927
15.0		-0.487	-0.831	-0.686	-0.824	-0.030
20.0		-0.801	-0.305	-0.152	-1.015	-0.537
30.0		-0.587	-0.440	-0.140	-0.995	-0.845
50.0		0.101	-0.339	-0.831	2.121	-0.287
65.0		-0.871	-0.517	-0.743	-0.527	0.088
78.5		-0.304	-1.453	-1.013	-0.871	-0.788
79.5		-81.958	-68.700	-60.030	-65.570	-57.783
80.5		-77.410	-70.881	-66.575	-56.188	-57.638
81.5		-80.843	-75.130	-71.380	-56.729	-54.130
82.0		-81.415	-82.057	-65.377	-75.976	-67.135
84.0		-86.990	-80.773	-82.111	-84.063	-82.881
87.0		-83.300	-84.953	-80.095	-86.063	-90.847
89.0		0.549	0.135	-3.202	-2.374	2.778
93.0		0.337	0.630	0.047	-1.013	0.704
98.0		0.095	-0.075	1.298	0.540	-0.047
100.0		-2.666	-1.904	-1.676	-1.706	-1.549
2.5	(LOWER)	0.682	0.422	0.158	-0.090	0.473
5.0		-0.690	0.486	0.263	0.083	0.120
10.0		0.440	0.512	0.030	0.363	-0.138
20.0		-0.130	0.183	-0.600	-0.304	-0.001
30.0		0.271	0.071	-0.020	-0.176	0.300
50.0		0.277	-0.240	-0.147	-0.521	-0.307
70.5		-0.557	-0.280	-0.138	-0.102	-0.268
80.0		0.001	0.236	1.082	0.275	0.198
98.0		0.480	0.175	3.070	0.034	0.056

RUN 121 POINT 2 ALPHA -0.01 PSI 0.00 HEIGHT 99.50

X/C, %		BP 2	BP 6	BP 12	BP 16	BP 22
0.0	(UPPER)	1.354	0.867	0.820	-0.020	0.200
2.5		0.890	0.192	0.212	0.187	-0.040
5.0		-0.337	-0.127	-0.218	0.212	0.320
10.0		-0.291	-0.122	-0.168	-0.257	0.583
15.0		-0.305	-0.434	0.137	-0.300	0.237
20.0		-0.678	-0.182	0.020	-0.039	-0.300
30.0		-0.481	-0.332	-0.014	-0.481	-0.527
50.0		0.182	-0.244	-0.542	1.047	-0.185
65.0		-0.568	-0.441	-0.863	-0.437	0.184
78.5		-0.305	-1.380	-1.526	-0.700	-0.044
79.5		-104.258	-87.748	-87.901	-104.736	-86.369
80.5		-99.695	-90.787	-88.438	-71.897	-74.101
81.5		-77.066	-102.155	-92.052	-88.199	-88.018
82.0		-105.214	-80.405	-84.545	-88.236	-88.983
84.0		-85.444	-90.086	-78.803	-81.878	-81.055
87.0		-80.060	-81.973	-77.830	-85.788	-75.018
89.0		.588	0.156	-3.071	-2.230	2.834
93.0		.355	0.448	0.729	-1.022	0.198
98.0		0.110	-0.040	1.350	0.611	-0.731
100.0		-1.208	-1.888	-1.846	-1.834	-1.480
2.5	(LOWER)	-0.232	0.086	-0.230	-0.520	0.004
5.0		-0.328	0.268	0.463	-0.248	0.272
10.0		0.273	0.256	-0.192	0.137	-0.368
20.0		-0.225	0.078	-0.131	-0.524	-0.098
30.0		0.180	-0.005	-0.127	-0.265	0.054
50.0		0.228	-0.283	-0.168	-0.557	-0.313
70.5		-0.350	-0.315	-0.163	-0.094	-0.194
80.0		0.054	0.210	1.082	0.250	0.213
98.0		0.457	0.152	3.723	0.017	0.074

RUN 121 POINT 6 ALPHA 7.00 PSI 0.00 HEIGHT 84.37

X/C, %		BP 2	BP 6	BP 12	BP 16	BP 22
0.0	(UPPER)	0.337	-1.500	-2.292	-2.054	-2.525
2.5		-0.002	-1.224	-1.480	-1.053	-2.113
5.0		-0.784	-0.978	-1.148	-1.288	-1.294
10.0		-0.681	-0.825	-0.839	-0.883	-0.955
15.0		-0.605	-0.887	-0.788	-0.824	-0.714
20.0		-0.483	-0.567	-0.831	-0.848	-0.050
30.0		-0.442	-0.468	-0.580	-0.594	-0.584
50.0		-0.437	-0.487	-0.526	1.221	-0.595
65.0		-0.498	-0.876	-0.829	-0.883	-0.785
78.5		0.023	-1.122	-1.338	-1.297	-1.474
79.5		-8.090	-8.090	-7.148	-8.839	-8.582
80.5		-8.277	-8.776	-8.792	-8.718	-8.289
81.5		-8.578	-8.043	-8.783	-8.218	-8.183
82.0		-8.431	-8.058	-8.722	-7.484	-8.180
84.0		-8.637	-8.730	-8.027	-7.078	-8.081
87.0		-8.720	-8.831	-8.764	-8.488	-8.031
89.0		0.248	0.082	-3.726	-2.007	2.371
93.0		0.341	0.388	0.413	-1.015	0.029
98.0		0.198	-0.414	1.253	0.343	-1.428
100.0		-2.068	-2.022	-1.830	-1.938	-1.850
2.5	(LOWER)	0.475	0.438	0.486	0.488	0.428
5.0		0.317	0.219	0.330	0.386	0.323
10.0		0.178	0.320	0.257	0.228	0.198
20.0		0.086	0.057	0.095	0.085	-0.010
30.0		0.095	0.07[illegible]	0.037	0.047	-0.084
50.0		-0.013	-0.028	-0.038	-0.083	-0.117
70.5		-0.198	0.083	0.086	0.058	0.031
80.0		0.141	0.185	0.952	0.172	0.038
98.0		0.081	0.050	2.397	0.060	-0.039

WING PRESSURE COEFFICIENTS

RUN 121 POINT 8 ALPHA 12.00 PSI 0.00 HEIGHT 81.72

X/C. %		BP 2	BP 6	BP 12	BP 16	BP 22
0.0	(UPPER)	0.487	-3.000	-2.017	-3.256	-1.715
2.5		0.053	-2.310	-1.987	-2.871	-1.456
5.0		-1.177	-1.646	-1.831	-2.880	-1.447
10.0		0.040	-1.136	-1.567	-2.630	-1.355
15.0		-0.827	-0.833	-1.238	-1.662	-1.345
24.0		-0.835	-0.747	-0.919	-0.720	-1.330
33.0		-0.558	-0.040	-0.774	-0.020	-1.193
54.0		-0.487	-0.560	-0.041	1.330	-1.074
65.0		-0.523	-0.781	-3.095	-0.005	-1.182
78.5		0.010	-1.114	-1.181	-1.793	-1.663
79.5		-6.264	-6.680	-6.987	-6.394	-6.340
80.5		-6.150	-6.571	-6.523	-6.524	-6.040
81.5		-6.390	-6.420	-6.557	-6.640	-5.668
82.0		-6.390	-6.834	-6.483	-7.187	-5.930
84.0		-6.410	-6.425	-6.733	-6.004	-5.051
87.0		-6.511	-6.574	-6.953	-6.753	-5.817
90.0		0.175	0.006	-3.367	-3.401	1.433
93.0		0.202	0.246	0.350	-1.017	0.007
96.0		0.117	-0.462	1.051	0.340	-1.560
100.0		-1.005	-1.663	-1.795	-1.004	-1.066
2.5	(LOWER)	0.561	0.536	0.500	0.515	0.451
5.0		0.454	0.366	0.441	0.400	0.386
10.0		0.332	0.463	0.305	0.381	0.284
24.0		0.172	0.168	0.214	0.187	0.044
33.0		0.007	0.149	0.127	0.130	-0.030
54.0		0.055	0.047	0.035	-0.020	-0.090
73.5		-0.155	0.117	0.160	0.103	0.013
84.0		0.196	0.212	0.005	0.205	0.010
96.0		0.133	0.160	2.730	0.001	-0.049

RUN 121 POINT 13 ALPHA 21.00 PSI 0.00 HEIGHT 98.11

X/C. %		BP 2	BP 6	BP 12	BP 16	BP 22
0.0	(UPPER)	0.756	-5.351	-3.004	-3.338	-1.070
2.5		0.288	-5.471	-3.174	-3.403	-1.760
5.0		-2.471	-5.980	-3.390	-3.566	-1.745
10.0		-1.005	-4.030	-3.303	-3.107	-1.605
15.0		-1.001	-3.120	-3.501	-2.675	-1.744
24.0		-1.143	-1.043	-3.474	-2.003	-1.002
33.0		-0.006	-0.021	-2.740	-2.005	-1.047
54.0		-0.072	-0.001	-0.707	1.531	-1.001
65.0		-0.036	-0.034	0.520	-1.056	-1.047
78.5		0.003	-1.175	-1.026	-1.350	-2.004
79.5		-5.015	-8.324	-8.024	-7.775	-5.751
80.5		-5.014	-8.354	-8.113	-8.219	-5.855
81.5		-8.060	-8.114	-8.232	-5.054	-5.734
82.0		-5.020	-8.290	-8.120	-8.041	-5.582
84.0		-8.035	-5.061	-8.300	-8.110	-5.561
87.0		-8.320	-8.291	-8.751	-8.001	-5.510
90.0		0.323	-0.060	-3.314	-2.420	-0.775
93.0		0.431	0.176	0.303	-0.938	-0.034
96.0		0.247	-0.547	1.000	0.230	-2.072
100.0		-1.771	-1.767	-1.633	-1.834	-1.004
2.5	(LOWER)	0.505	0.204	0.300	0.348	0.377
5.0		0.777	0.503	0.535	0.532	0.442
10.0		0.621	0.500	0.001	0.526	0.445
24.0		0.410	0.418	0.454	0.420	0.370
33.0		0.310	0.375	0.350	0.347	0.114
54.0		0.219	0.237	0.204	0.132	-0.003
73.5		0.020	0.200	0.230	0.200	0.002
84.0		0.290	0.300	0.070	0.235	-0.000
96.0		0.212	0.103	3.383	0.123	-0.133

WING PRESSURE COEFFICIENTS

RUN 122 POINT 3 ALPHA -0.01 PSI 0.00 HEIGHT 81.28

X/C. %		BP 2	BP 6	BP 12	BP 16	BP 22
0.0	(UPPER)	0.000	0.001	0.300	0.575	0.481
2.5		0.003	-0.307	-0.601	-0.436	-0.247
5.0		-0.102	-0.490	-0.421	-0.495	-0.508
10.0		-0.294	-0.544	-0.680	-0.430	-0.313
15.0		-0.337	-0.398	-0.585	-0.423	-0.530
24.0		-0.202	-0.451	-0.495	-0.300	-0.414
33.0		-0.377	-0.363	-0.521	-0.448	-0.307
54.0		-0.575	-0.553	-0.510	2.630	-0.593
65.0		-0.570	-0.823	-0.057	-0.755	-0.086
78.5		0.011	-1.449	-1.537	-1.757	-1.017
79.5		-13.833	-14.070	-15.087	-16.010	-14.540
80.5		-13.000	-14.630	-14.782	-14.492	-13.680
81.5		-14.104	-14.323	-14.050	-13.715	-13.133
82.0		-13.002	-14.736	-14.504	-15.024	-13.703
84.0		-14.200	-14.003	-14.709	-15.124	-13.237
87.0		-14.500	-14.001	-14.070	-13.000	-12.010
90.0		0.017	0.454	-0.107	-4.304	4.005
93.0		0.795	0.070	1.104	-1.304	-0.110
96.0		0.360	-0.700	3.470	0.930	-2.137
100.0		-3.783	-3.000	-3.475	-3.946	-2.040
2.5	(LOWER)	-0.311	-0.272	-0.213	-0.100	-0.427
5.0		-0.172	-0.320	-0.340	-0.202	-0.340
10.0		-0.304	-0.331	-0.323	-0.347	-0.272
24.0		-0.271	-0.300	-0.221	-0.105	-0.324
33.0		-0.415	-0.255	-0.203	-0.229	-0.241
54.0		-0.300	-0.231	-0.270	-0.304	-0.215
73.5		-0.372	-0.070	-0.050	-0.034	-0.005
84.0		-0.034	-0.035	1.504	-0.040	-0.040
97.0		-0.245	-0.231	5.516	-0.100	-0.290

RUN 122 POINT 4 ALPHA 3.00 PSI 0.00 HEIGHT 87.98

X/C. %		BP 2	BP 6	BP 12	BP 16	BP 22
0.0	(UPPER)	1.042	-0.100	-0.491	-0.202	-0.227
2.5		0.187	-0.980	-1.142	-1.290	-1.060
5.0		-0.500	-0.817	-0.815	-1.041	-1.078
10.0		-0.544	-0.850	-0.829	-0.700	-0.002
15.0		-0.500	-0.011	-0.050	-0.079	-0.829
24.0		-0.377	-0.001	-0.605	-0.402	-0.007
33.0		-0.007	-0.400	-0.002	-0.500	-0.510
54.0		-0.007	-0.300	-0.504	2.777	-0.724
65.0		-0.020	-0.030	-0.745	-0.000	-1.101
78.5		0.025	-1.533	-1.050	-1.000	-2.009
79.5		-13.300	-14.221	-14.710	-17.014	-14.011
80.5		-13.390	-14.235	-14.310	-14.101	-13.253
81.5		-13.779	-13.005	-14.314	-13.311	-12.701
82.0		-13.433	-14.314	-14.127	-15.304	-13.210
84.0		-13.701	-14.231	-14.302	-14.701	-12.700
87.0		-14.000	-14.333	-14.210	-13.525	-12.540
90.0		0.502	0.415	-0.200	-4.003	4.043
93.0		0.748	0.040	1.021	-1.450	-0.120
96.0		0.350	-0.703	2.305	0.021	-2.275
100.0		-3.775	-3.004	-3.504	-3.007	-2.002
2.5	(LOWER)	0.110	0.075	0.100	0.245	0.055
5.0		0.071	-0.104	-0.077	0.000	0.040
10.0		-0.330	-0.005	-0.040	-0.120	-0.044
24.0		-0.150	-0.250	-0.113	-0.030	-0.227
33.0		-0.327	-0.170	-0.201	-0.124	-0.300
54.0		-0.304	-0.160	-0.225	-0.231	-0.211
73.5		-0.773	-0.030	-0.000	-0.040	-0.007
84.0		-0.003	-0.014	1.510	-0.010	-0.000
96.0		-0.234	-0.240	5.450	-0.152	-0.230

WING PRESSURE COEFFICIENTS

RUN 122 POINT 8 ALPHA 7.00 PSI 0.00 HEIGHT 83.07

X/C. X		BP 2	BP 6	BP 12	BP 16	BP 22
0.0	(UPPER)	1.237	-1.776	-3.540	2.904	-2.000
2.5		0.425	-1.422	-1.730	-1.858	-2.083
5.0		-0.056	-1.187	-1.351	-1.556	-1.583
10.0		-0.741	-1.107	-1.124	-1.124	-0.862
15.0		-0.712	-0.777	-1.112	-0.835	-1.103
24.0		-0.475	-0.722	-0.852	-0.810	-0.775
33.0		-0.507	-0.575	-0.753	-0.707	-0.052
54.0		-0.741	-0.700	-0.856	2.000	-0.056
65.0		-0.834	-0.958	-0.780	-0.940	-1.254
78.5		0.958	-1.515	-1.866	-1.950	-2.230
79.5		-10.042	-11.714	-12.140	-14.900	-15.310
80.5		-10.072	-11.600	-11.748	-11.595	-10.724
81.5		-11.300	-11.322	-11.615	-10.781	-10.337
82.0		-10.007	-11.700	-11.574	-12.000	-10.556
84.0		-11.390	-11.664	-11.680	-12.071	-10.373
87.0		-11.583	-11.831	-11.005	-11.016	-10.660
89.0		0.537	0.300	-6.198	-4.370	4.035
93.0		0.780	0.814	0.962	-1.456	-0.115
96.0		0.350	-0.779	2.310	0.700	-2.370
100.0		-3.635	-3.873	-3.353	-3.484	-2.975
2.5	(LOWER)	0.271	0.290	0.435	0.400	0.200
5.0		0.317	0.018	0.160	0.318	0.254
10.0		-0.056	0.134	0.260	0.072	0.173
24.0		-0.010	-0.110	0.042	0.134	-0.108
33.0		-0.220	-0.054	-0.070	0.004	-0.220
54.0		-0.201	-0.080	-0.123	-0.120	-0.182
73.5		-0.184	0.047	-0.023	0.039	-0.060
84.0		0.066	0.040	1.500	-0.004	-0.080
96.0		-0.202	-0.157	5.470	-0.114	-0.222

RUN 122 POINT 8 ALPHA 12.00 PSI 0.00 HEIGHT 84.07

X/C. X		BP 2	BP 6	BP 12	BP 16	BP 22
0.0	(UPPER)	1.445	-3.083	-3.188	-3.208	-1.005
2.5		0.828	-3.383	-2.878	-2.302	-1.520
5.0		-1.258	-1.053	-2.050	-2.300	-1.005
10.0		-1.040	-1.202	-2.429	-2.105	-1.313
15.0		-0.042	-0.878	-2.054	-2.047	-1.501
24.0		-0.820	-0.887	-1.110	-1.570	-1.320
33.0		-0.000	-0.083	-0.867	-1.322	-1.201
54.0		-0.823	-0.760	-0.861	2.050	-1.345
65.0		-0.052	-1.014	-0.760	-0.867	-1.712
78.5		0.000	-1.520	-1.000	-1.755	-2.514
79.5		-10.133	-10.000	-11.525	-14.360	-10.402
80.5		-10.167	-10.007	-11.020	-10.048	-10.004
81.5		-10.020	-10.030	-10.020	-10.127	-9.723
82.0		-10.170	-11.007	-10.072	-12.012	-9.047
84.0		-10.590	-10.042	-11.100	-11.300	-9.550
87.0		-10.010	-11.000	-10.000	-10.320	-9.410
89.0		0.550	0.204	-6.152	-4.217	3.752
93.0		0.007	0.755	1.000	-1.320	-0.113
96.0		0.300	-0.010	2.303	0.050	-2.002
100.0		-3.500	-3.646	-3.230	-3.403	-3.040
2.5	(LOWER)	0.570	0.392	0.507	0.552	0.287
5.0		0.500	0.147	0.270	0.430	0.310
10.0		0.000	0.255	0.363	0.187	0.205
24.0		0.095	-0.013	0.183	0.250	-0.04[illegible]
33.0		-0.135	0.020	0.020	0.097	-0.1[illegible]
54.0		-0.130	-0.004	-0.054	-0.085	-0.143
73.5		-0.005	0.117	0.050	0.063	0.000
84.0		0.120	0.002	1.530	-0.040	-0.110
96.0		-0.104	-0.115	5.705	-0.000	-0.202

WING PRESSURE COEFFICIENTS

RUN 122 POINT 13 ALPHA 21.00 PSI 0.00 HEIGHT 88.00

X/C. X		BP 2	BP 6	BP 12	BP 16	BP 22
0.0	(UPPER)	1.870	-6.343	-3.783	-2.040	-1.000
2.5		1.011	-7.083	-4.105	-3.210	-2.101
5.0		-2.041	-7.000	-4.054	-3.345	-2.360
10.0		-2.030	-4.610	-4.500	-3.181	-1.975
15.0		-1.770	-1.487	-5.110	-3.270	-2.304
24.0		-1.117	-1.342	-4.317	-3.040	-2.131
33.0		-0.052	-0.941	-2.405	-3.024	-2.010
54.0		-1.050	-0.954	-0.533	3.405	-2.456
65.0		-0.787	-1.192	-0.630	-1.188	-2.227
78.5		0.042	-1.000	-1.570	-1.905	-4.210
79.5		-10.370	-11.281	-11.770	-14.545	-10.300
80.5		-10.370	-11.287	-11.210	-11.190	-10.133
81.5		-10.021	-10.080	-11.232	-10.440	-10.046
82.0		-10.401	-11.340	-11.070	-12.171	-9.939
84.0		-10.787	-10.973	-11.350	-11.292	-9.720
87.0		-11.204	-11.350	-11.230	-10.845	-9.052
89.0		0.050	0.300	-6.531	-4.335	1.220
93.0		1.005	0.730	1.062	-1.301	-0.101
96.0		0.020	-0.060	2.510	0.500	-3.034
100.0		-3.500	-3.003	-3.374	-3.053	-3.554
2.5	(LOWER)	0.512	0.135	0.347	0.320	0.050
5.0		0.777	0.333	0.303	0.471	0.325
10.0		0.334	0.322	0.542	0.357	0.420
24.0		0.335	0.295	0.382	0.500	0.110
33.0		0.043	0.247	0.225	0.301	-0.060
54.0		-0.003	0.192	0.060	0.103	-0.070
73.5		0.030	0.253	0.182	0.181	-0.041
84.0		0.215	0.104	1.000	0.027	-0.175
96.0		-0.130	-0.040	0.070	-0.047	-0.350

RUN 230 POINT 15 ALPHA 0.00 PSI 0.01 HEIGHT 86.03

X/C. X		BP 2	BP 6	BP 12	BP 16	BP 22
0.0	(UPPER)	-0.120	-0.202	0.350	0.440	0.435
2.5		0.201	0.293	-0.025	-0.214	-0.202
5.0		0.210	0.301	-0.070	-0.220	-0.303
10.0		0.114	0.087	-0.140	-0.241	-0.200
15.0		0.071	0.002	-0.170	-0.237	-0.207
24.0		-0.012	-0.021	-0.105	-0.220	-0.244
33.0		-0.071	-0.122	-0.221	-0.217	-0.230
54.0		-0.073	-0.257	-0.290	-0.007	-0.230
65.0		0.014	-0.205	-0.370	-0.300	-0.344
78.5		0.04[illegible]	-0.053	-0.074	-0.040	-0.000
79.5		-0.035	-0.074	-0.051	-0.030	-0.002
80.5		-0.025	-0.012	-0.011	-0.040	0.012
81.5		-0.020	-0.203	-0.022	-0.025	-0.030
82.0		-0.020	-0.095	-0.024	-0.243	-0.391
84.0		-0.570	-0.500	-0.501	-0.011	-0.[illegible]
87.0		-0.543	-0.545	-0.500	0.017	-0.07[illegible]
89.0		-0.500	0.325	-0.541	-0.500	-0.042
93.0		-0.5[illegible]3	-0.510	-0.544	-0.571	0.041
96.0		-0.502	-0.500	-0.530	-0.573	-0.229
100.0		-0.337	-0.387	-0.410	-0.4[illegible]	-0.042
2.5	(LOWER)	-0.300	-0.442	-0.177	0.012	0.002
5.0		-0.237	-0.170	0.124	-0.005	0.017
10.0		-0.151	-0.201	-0.072	-0.010	-0.012
24.0		-0.073	-0.000	-0.023	-0.010	-0.010
33.0		-0.053	-0.011	0.027	0.037	0.047
54.0		0.000	0.100	0.144	0.027	0.191
73.5		0.215	0.300	0.404	0.143	0.400
84.0		0.301	0.494	0.040	0.500	0.535
96.0		0.104	0.230	0.275	0.271	0.200

WING PRESSURE COEFFICIENTS

RUN 230 POINT 16 ALPHA 4.05 PSI 0.01 WEIGHT 87.75

X/C, %		BP 2	BP 8	BP 12	BP 16	BP 22
0.0	(UPPER)	0.105	0.114	0.157	-0.217	-0.700
2.5		0.172	0.058	-0.414	-0.756	-1.637
5.0		0.103	-0.002	-0.390	-0.549	-0.722
10.0		0.002	-0.151	-0.347	-0.460	-0.548
15.0		-0.041	-0.140	-0.318	-0.402	-0.451
24.0		-0.114	-0.109	-0.292	-0.330	-0.300
33.0		-0.163	-0.225	-0.288	-0.286	-0.312
54.0		-0.007	-0.24[illegible]	-0.330	0.000	-0.350
65.0		0.063	-0.309	-0.414	-0.389	0.201
78.5		0.051	-0.672	-0.001	-0.071	-0.773
79.5		-0.043	-0.800	-0.806	-0.057	-0.821
80.5		-0.020	-0.636	-0.067	-0.067	0.024
81.5		-0.038	-0.284	-0.002	-0.057	-0.750
82.0		-0.023	-0.565	-0.027	-0.086	-0.047
84.0		-0.001	-0.814	-0.030	-0.048	-0.040
87.0		-0.550	-0.588	-0.034	-0.072	-0.063
89.0		-0.537	-0.554	-0.567	-0.037	-0.022
93.0		-0.545	-0.561	-0.001	-0.048	0.053
96.0		-0.545	-0.551	-0.590	-0.056	-0.087
100.0		-0.373	-0.002	-0.444	-0.590	-0.777
2.5	(LOWER)	-0.172	-0.137	0.185	0.314	0.383
5.0		-0.104	-0.027	0.127	0.232	0.272
10.0		-0.042	-0.060	0.101	0.187	0.170
24.0		0.010	0.011	0.075	0.087	0.083
33.0		0.012	0.063	0.000	0.131	0.050
54.0		0.143	0.153	0.153	0.056	0.195
73.5		0.229	0.438	0.190	0.130	0.000
84.0		0.423	0.543	0.050	0.500	0.544
96.0		0.226	0.261	0.268	0.200	0.140

RUN 230 POINT 17 ALPHA 8.07 PSI 0.01 WEIGHT 87.15

X/C, %		BP 2	BP 8	BP 12	BP 16	BP 22
0.0	(UPPER)	0.384	0.130	-1.132	-2.202	-2.172
2.5		-0.000	-0.308	-0.895	-1.481	-1.795
5.0		-0.109	-0.242	-0.707	-1.000	-1.710
10.0		-0.188	-0.329	-0.604	-0.803	-1.545
15.0		-0.213	-0.334	-0.525	-0.676	-1.004
24.0		-0.300	-0.200	-0.440	-0.540	-0.607
33.0		-0.296	-0.371	-0.428	-0.488	-0.463
54.0		-0.061	-0.270	-0.457	-0.013	-0.406
65.0		0.030	-0.503	-0.575	-0.571	-0.622
78.5		0.037	-1.054	1.071	-1.079	-1.360
79.5		-1.200	1.206	-1.170	-1.181	-1.834
80.5		-1.170	-1.079	-1.005	-1.088	0.[illegible]
81.5		-1.120	-0.287	-1.071	-1.055	-1.013
82.0		-1.000	-0.068	-0.082	-1.012	-1.630
84.0		0.010	-0.607	0.054	-0.030	-1.001
87.0		-0.649	-0.779	-0.740	-0.055	-1.423
89.0		-0.600	-0.634	0.638	-0.730	-1.280
93.0		-0.510	-0.527	-0.558	-0.642	0.045
96.0		-0.452	-0.456	-0.503	-0.572	-0.047
100.0		-0.310	-0.318	-0.348	-0.421	-0.535
2.5	(LOWER)	0.075	0.182	0.282	0.485	0.502
5.0		0.081	0.153	0.330	0.411	0.430
10.0		0.100	0.160	0.260	0.331	0.311
24.0		0.117	0.129	0.195	0.205	0.140
33.0		0.100	0.183	0.186	0.214	0.045
54.0		0.212	0.278	0.253	0.072	0.177
73.5		0.234	0.510	0.541	0.117	0.427
84.0		0.523	0.632	0.645	0.598	0.458
96.0		0.268	0.345	0.347	0.319	0.187

WING PRESSURE COEFFICIENTS

RUN 230 POINT 18 ALPHA 12.06 PSI 0.01 WEIGHT 87.74

X/C, %		BP 2	BP 8	BP 12	BP 16	BP 22
0.0	(UPPER)	0.291	-0.740	-3.270	-3.447	-1.630
2.5		-0.[illegible]	-0.743	-1.500	-3.170	-1.677
5.0		-0.345	-0.605	-1.152	-3.410	-1.564
10.0		-0.307	-0.595	-0.806	-0.797	-1.549
15.0		-0.380	-0.511	-0.738	-0.660	-1.536
24.0		-0.405	-0.470	-0.703	-0.625	-1.381
33.0		-0.407	-0.476	-0.530	-0.530	-1.454
54.0		-0.400	-0.418	-0.543	-0.020	-0.741
67.0		0.027	-0.545	-0.588	-0.584	-0.507
78.5		0.020	-0.906	-1.010	-1.004	-1.062
79.5		-1.056	-1.067	-1.082	-1.061	-1.251
80.5		-1.033	-0.974	-0.083	-1.030	-0.933
81.5		-1.013	-0.303	-0.050	-0.973	-1.242
82.0		-0.976	-0.914	-0.838	-0.905	-1.278
84.0		-0.830	-0.856	-0.842	-0.811	-1.308
87.0		-0.710	-0.748	-0.790	-0.800	-1.210
89.0		-0.034	-0.083	-0.704	-0.790	-1.173
93.0		-0.583	-0.500	-0.050	-0.745	0.031
96.0		-0.523	-0.533	-0.614	-0.005	-1.054
100.0		-0.356	-0.388	-0.430	-0.515	-0.670
2.5	(LOWER)	0.230	0.401	0.450	0.478	0.485
5.0		0.233	0.275	0.440	0.503	0.461
10.0		0.238	0.348	0.300	0.430	0.390
24.0		0.204	0.234	0.287	0.280	0.207
33.0		0.180	0.238	0.270	0.278	0.030
54.0		0.253	0.268	0.287	0.061	0.150
73.5		0.240	0.522	0.556	0.600	0.410
84.0		0.551	0.634	0.634	0.601	0.453
96.0		0.320	0.331	0.335	0.295	0.120

RUN 230 POINT 19 ALPHA 22.02 PSI 0.01 WEIGHT 94.57

X/C, %		BP 2	BP 8	BP 12	BP 16	BP 22
0.0	(UPPER)	-4.322	-4.730	-2.523	-1.881	-1.251
2.5		-1.012	-3.547	-2.075	-1.935	-1.287
5.0		-1.338	-3.467	-2.710	-1.982	-1.304
10.0		-1.054	-1.151	-2.004	-1.995	-1.334
15.0		-0.905	-1.021	-2.735	2.035	-1.317
24.0		-0.758	-0.826	-1.900	-2.055	-1.275
33.0		-0.804	-0.[illegible]	-1.306	-1.887	-1.250
54.0		-0.113	-0.633	-0.834	-0.037	-1.200
65.0		0.014	-0.701	-0.806	-1.004	-1.255
78.5		0.013	-1.290	-1.290	-1.248	-1.330
79.5		-1.457	-1.487	-1.380	-1.411	-1.387
80.5		-1.417	-1.303	-1.234	-1.336	-0.037
81.5		-1.257	-0.309	-1.181	-1.258	-1.263
82.0		-1.186	-1.227	-1.100	-1.231	-1.287
84.0		-0.887	-1.004	-0.987	-1.129	-1.247
87.0		-0.760	-0.893	-0.993	-1.026	-1.173
89.0		-0.681	-0.756	-0.781	-0.900	-1.121
93.0		-0.578	-0.617	-0.718	-0.836	0.012
96.0		-0.519	-0.530	-0.672	-0.793	-1.028
100.0		-0.353	-0.373	-0.503	-0.048	-0.956
2.5	(LOWER)	0.056	0.452	0.389	0.372	0.345
5.0		0.095	0.507	0.504	0.503	0.485
10.0		0.630	0.610	0.530	0.503	0.480
24.0		0.468	0.461	0.501	0.473	0.338
33.0		0.427	0.451	0.452	0.443	0.018
54.0		0.388	0.407	0.404	0.154	0.149
73.5		0.253	0.610	0.803	0.684	0.398
84.0		0.662	0.730	0.018	0.620	0.460
96.0		0.415	0.401	0.348	0.285	0.102

WING PRESSURE COEFFICIENTS

RUN 231 POINT 2 ALPHA -0.01 PSI 0.01 HEIGHT 87.80

X/C. %		BP 2	BP 6	BP 12	BP 16	BP 22
0.0	(UPPER)	-0.328	-0.410	-0.837	-0.507	-0.111
2.5		0.750	0.609	-0.635	-0.456	-0.070
5.0		0.669	0.634	-0.871	-0.458	-0.745
10.0		0.502	0.453	-0.854	-0.492	-0.854
15.0		0.304	0.278	-0.508	-0.522	-0.573
24.0		0.143	0.073	-0.510	-0.508	-0.560
33.0		-0.018	-0.002	-0.474	-0.488	-0.543
54.0		-0.505	-0.453	-0.583	-0.330	-0.848
66.0		-0.015	-0.673	-0.748	-1.004	-0.817
78.5		-0.018	-2.305	-2.354	-2.438	-2.862
79.5		-42.566	-38.053	-37.981	-36.275	-18.015
80.5		-3.701	-3.623	-3.832	-6.480	0.112
81.5		-2.122	-0.988	-2.114	-2.700	-3.948
82.0		-0.335	-1.710	0.481	-1.995	-2.254
84.0		-2.580	-2.327	-2.500	-1.836	-1.563
87.0		-0.562	-2.087	-0.882	-1.300	-0.810
89.0		-0.630	-0.887	2.423	-1.391	-0.871
93.0		-0.354	-0.746	-0.415	-1.421	-0.008
98.0		-0.401	-0.854	0.605	-0.360	-1.306
100.0		-0.262	-0.120	-0.344	-0.563	-0.268
2.5	(LOWER)	-0.463	-0.378	-0.505	-0.536	0.018
5.0		-0.401	-0.408	-0.488	-0.514	-0.110
10.0		-0.374	-0.381	-0.482	-0.309	-0.234
24.0		-0.471	-0.481	-0.507	-0.548	-0.336
33.0		-0.481	-0.504	-0.525	-0.527	0.002
54.0		-0.309	-0.475	-0.482	-0.475	-0.371
73.5		-0.252	-0.247	-0.300	-0.188	0.351
84.0		-0.050	-0.105	-0.004	0.048	0.570
98.0		0.013	-0.022	-0.010	0.088	0.387

RUN 231 POINT 4 ALPHA 4.08 PSI 0.01 HEIGHT 87.18

X/C. %		BP 2	BP 6	BP 12	BP 16	BP 22
0.0	(UPPER)	-0.888	-0.513	-0.754	-0.883	-1.126
2.5		0.758	0.537	-0.817	-0.783	-1.149
5.0		0.637	0.582	-0.595	-0.722	-0.894
10.0		0.450	0.388	-1.126	-0.706	-0.726
15.0		0.328	0.187	-1.078	-0.713	-0.600
24.0		0.101	0.010	-0.806	-0.790	-0.555
33.0		-0.053	-0.128	-0.755	-0.539	-0.547
54.0		-0.835	-0.484	-0.880	-0.328	-0.835
66.0		-0.618	-0.675	-0.774	-1.324	-0.886
78.5		-0.623	-2.487	-2.539	-2.344	-2.053
79.5		-43.213	-40.333	-38.284	-30.480	-18.784
80.5		-3.831	-4.125	-4.083	-6.522	-0.122
81.5		-2.266	-1.011	-2.454	-2.889	-3.946
82.0		-0.454	-1.857	0.207	-1.881	-2.217
84.0		-2.716	-2.525	-2.735	-2.017	-1.505
87.0		-0.671	-2.258	-1.143	-1.524	-0.882
89.0		-0.753	-1.152	-2.728	-1.566	-0.773
93.0		-0.472	-0.886	-0.848	-1.747	-0.007
98.0		-0.524	-0.777	-0.178	-0.681	-1.505
100.0		-0.341	-0.141	-0.135	-0.232	-0.301
2.5	(LOWER)	-0.530	-0.457	-0.612	-0.575	0.102
5.0		0.514	-0.471	-0.571	-0.523	0.074
10.0		-.482	-0.451	-0.588	-0.468	-0.037
24.0		-0.500	[illegible]	-0.503	-0.383	-0.147
33.0		-0.494	-0.507	-0.432	-0.299	0.008
54.0		-0.195	-0.278	-0.209	-0.313	-0.430
73.5		-0.200	-0.023	-0.010	-0.132	0.272
84.0		0.122	0.104	-0.003	0.240	0.443
98.0		.255	0.188	0.200	0.254	0.348

WING PRESSURE COEFFICIENTS

RUN 231 POINT 6 ALPHA 8.17 PSI 0.01 HEIGHT 88.51

X/C. %		BP 2	BP 6	BP 12	BP 16	BP 22
0.0	(UPPER)	-0.948	-0.895	-0.431	-0.578	-4.804
2.5		0.674	0.332	-0.541	-0.852	-2.455
5.0		0.518	0.238	-0.886	-0.780	-1.085
10.0		0.310	0.088	-0.845	-0.747	-1.144
15.0		0.175	-0.087	-0.819	-0.788	-0.870
24.0		-0.041	-0.195	-1.007	-0.822	-0.730
33.0		-0.185	-0.340	-1.081	-0.853	-0.805
54.0		-0.857	-0.489	-1.101	-0.257	-0.816
66.0		-0.831	-0.749	-1.213	-1.347	-1.119
78.5		-0.630	-2.561	-3.008	-3.098	-3.433
79.5		-43.891	-41.056	-46.825	-32.912	-20.578
80.5		-4.062	-4.300	-4.238	-7.413	-0.132
81.5		-2.443	-1.031	-3.827	-3.354	-4.003
82.0		-0.811	-2.044	-0.077	-2.585	-3.183
84.0		-2.867	-2.771	-2.994	-2.521	-2.268
87.0		-0.758	-2.482	-1.419	-1.533	-1.527
89.0		-0.887	-1.230	-2.004	-1.850	-1.423
93.0		-0.804	-1.004	-1.020	-1.982	-0.022
98.0		-0.647	-0.824	-0.551	-0.778	-1.342
100.0		-0.368	-0.210	-0.114	-0.150	-0.305
2.5	(LOWER)	-0.811	-0.529	-0.537	-0.096	0.378
5.0		-0.774	-0.512	-0.485	-0.004	0.358
10.0		-0.850	-0.506	-0.434	-0.077	0.248
24.0		-0.481	-0.391	-0.211	-0.073	0.683
33.0		-0.274	-0.271	-0.102	0.005	0.000
54.0		0.000	0.010	0.077	-0.190	-0.486
73.5		-0.200	0.184	0.184	0.406	0.278
84.0		0.285	0.207	-0.017	0.366	0.423
98.0		0.383	0.315	0.350	0.385	0.344

RUN 231 POINT 8 ALPHA 12.02 PSI 0.01 HEIGHT 87.92

X/C. %		BP 2	BP 6	BP 12	BP 16	BP 22
0.0	(UPPER)	-2.077	-0.782	-0.260	-2.779	-4.808
2.5		0.595	0.129	-0.719	-1.518	-4.147
5.0		0.450	-0.005	-0.832	-1.306	-3.886
10.0		0.181	-0.163	-0.853	-1.070	-2.887
15.0		0.053	-0.232	-1.013	-1.010	-1.838
24.0		-0.175	-0.309	-1.006	-0.990	-0.908
33.0		-0.281	-0.583	-1.177	-1.003	-0.806
54.0		-0.856	-0.815	-1.431	-0.261	-1.110
66.0		-0.681	-0.914	1.017	-1.534	-1.503
78.5		-0.068	-2.843	-3.487	-3.526	-4.380
79.5		-44.584	-41.942	-42.080	-34.375	-22.527
80.5		-4.936	-4.779	-4.304	-7.080	-0.190
81.5		-2.753	-1.039	-3.215	-3.810	-6.187
82.0		-0.381	-2.313	-0.378	-2.868	-4.200
84.0		-3.147	-3.083	-3.252	-2.963	-3.225
87.0		-1.075	-2.887	-1.718	-2.238	-2.198
89.0		-1.142	-1.952	-3.438	-2.110	-2.903
93.0		-0.810	-1.236	-1.307	-2.163	-0.058
98.0		-0.823	-1.063	-0.757	-0.850	-2.189
100.0		-0.453	-0.288	-0.216	-0.188	-0.327
2.5	(LOWER)	-1.025	-0.865	-0.222	0.190	0.238
5.0		-1.220	-0.540	-0.158	0.243	0.291
10.0		-0.528	-0.842	-0.074	0.288	0.357
24.0		0.087	-0.048	0.128	0.200	0.165
33.0		0.070	0.190	0.182	0.242	-0.030
54.0		0.282	0.255	0.294	-0.086	-0.488
73.5		-0.305	0.288	0.407	0.144	0.718
84.0		0.440	0.515	-0.083	0.054	0.314
98.0		0.442	0.472	0.509	0.522	0.293

WING PRESSURE COEFFICIENTS

RUN 231 POINT 13 ALPHA 22.02 PSI 0.01 HEIGHT 93.06

X/C, %		BP 2	BP 6	BP 12	BP 16	BP 22
0.0	(UPPER)	-0.435	0.070	-3.882	-10.136	-3.730
2.5		0.282	-0.235	-2.013	-6.928	-4.018
5.0		0.031	-0.424	-1.838	-4.442	-4.010
10.0		-0.231	-0.588	-1.435	-1.880	-4.851
15.0		-0.358	-0.775	-1.302	-1.834	-5.031
24.0		-0.807	-0.798	-1.257	-1.490	-3.838
33.0		-0.702	-0.880	-1.24[illegible]	-1.387	-2.475
54.0		-0.684	-1.025	-1.507	-0.237	-1.712
65.0		-0.132	-1.324	-1.791	-1.050	-2.024
78.5		-0.140	-3.441	-4.082	-4.200	-5.188
79.5		-46.471	-43.483	-43.933	-38.495	-24.114
80.5		-4.983	-5.383	-4.547	-8.853	-0.257
81.5		-3.623	-1.059	-3.741	-4.528	-7.094
82.0		-1.768	-2.860	-0.784	-3.808	-5.027
84.0		-4.000	-3.565	-3.450	-3.435	-3.848
87.0		-1.866	-3.048	-1.825	-2.511	-2.564
89.0		-1.740	-1.838	-3.519	-2.273	-2.304
93.0		-1.288	-1.455	-1.248	-2.184	-0.164
98.0		-1.294	-1.218	-0.685	-0.801	-2.267
100.0		-0.501	-0.349	-0.353	-0.272	-0.388
2.5	(LOWER)	-0.451	-0.077	0.277	-0.237	-0.196
5.0		-0.198	0.202	0.424	0.284	0.237
10.0		0.068	0.078	0.442	0.515	0.390
24.0		0.180	0.280	0.446	0.438	0.320
33.0		0.327	0.340	0.444	0.450	-0.071
54.0		0.485	0.382	0.448	0.032	-0.571
73.5		-0.371	0.544	0.682	0.352	0.265
84.0		0.617	0.712	-0.103	0.801	0.382
96.0		0.528	0.570	0.698	0.633	0.315

RUN 232 POINT 2 ALPHA 0.03 PSI 0.01 HEIGHT 80.83

X/C, %		BP 2	BP 6	BP 12	BP 16	BP 22
0.0	(UPPER)	-0.437	-0.444	-0.675	-0.841	-0.170
2.5		0.794	0.787	-0.463	-0.528	-0.832
5.0		0.646	0.726	-0.512	-0.504	-0.732
10.0		0.485	0.600	-0.430	-0.623	-0.801
15.0		0.406	0.249	-0.301	-0.689	-0.561
24.0		0.031	0.060	-0.310	-0.861	-0.853
33.0		-0.127	-0.156	-0.310	-0.882	-0.729
54.0		-1.326	-0.500	-0.667	-1.174	-0.722
65.0		-0.130	-0.796	-0.910	-1.213	-1.006
78.5		-0.155	-2.955	-3.043	-2.905	-3.366
79.5		-79.842	-73.877	-68.537	-55.851	-33.218
80.5		-5.446	-5.563	-6.044	-10.795	-0.447
81.5		-2.684	-3.027	-2.320	-3.615	-5.794
82.0		0.637	-1.445	2.744	-2.128	-2.561
84.0		-3.786	-3.425	-2.692	-2.649	-1.386
87.0		-0.212	-3.028	-0.684	-1.706	-0.165
89.0		-0.803	-1.130	-3.714	-1.494	-0.317
93.0		-0.389	-0.993	-0.202	-2.063	-0.063
98.0		-0.623	-0.905	0.372	-0.069	-1.923
100.0		-0.428	-0.371	-0.915	-1.015	-0.780
2.5	(LOWER)	-0.498	-0.416	-0.860	-0.72[illegible]	-0.053
5.0		-0.539	-0.381	-0.524	-0.646	-0.222
10.0		-0.357	-0.369	-0.594	-0.567	-0.361
24.0		-0.581	-0.525	-0.602	-0.745	-0.430
33.0		-0.456	-0.582	-0.642	-0.711	0.010
54.0		-0.468	-0.718	-0.715	-1.040	-2.083
73.5		-1.685	-0.578	-0.641	-0.555	0.234
84.0		-0.188	-0.320	-0.060	-0.029	0.583
96.0		-0.094	-0.154	-0.188	-0.021	0.374

WING PRESSURE COEFFICIENTS

RUN 232 POINT 4 ALPHA 4.01 PSI 0.01 HEIGHT 87.83

X/C, %		BP 2	BP 6	BP 12	BP 16	BP 22
0.0	(UPPER)	-0.599	-0.498	-0.788	-1.380	-0.837
2.5		0.788	0.830	-0.857	-1.043	-1.270
5.0		0.801	0.575	-1.072	-0.941	-0.930
10.0		0.444	0.503	-1.052	-0.983	-0.924
15.0		0.249	0.182	-0.872	-1.019	-0.850
24.0		-0.024	-0.045	-0.761	-1.263	-0.751
33.0		-0.188	-0.228	-0.855	-1.320	-0.838
54.0		-1.444	-0.526	-0.799	-1.028	-0.836
65.0		-0.143	-0.804	-0.944	-1.581	-1.006
78.5		-0.173	-2.872	-3.100	-2.891	-3.288
79.5		-81.854	-75.739	-70.082	-56.788	-33.792
80.5		-5.648	-5.704	-6.236	-10.838	-0.504
81.5		-2.782	-3.148	-2.530	-3.881	-5.817
82.0		0.618	-1.501	2.845	-2.206	-2.542
84.0		-3.920	-3.822	-2.907	-2.821	-1.414
87.0		-0.255	-3.224	-0.825	-1.882	-0.248
89.0		-0.847	-1.757	-3.051	-1.882	-0.387
93.0		-0.434	-1.120	-0.340	-2.301	-0.077
98.0		-0.678	-1.057	0.282	-0.280	-2.150
100.0		-0.435	-0.314	-0.500	-0.822	-0.645
2.5	(LOWER)	-0.562	-0.472	-0.738	-0.914	0.057
5.0		-0.581	-0.441	-0.618	-0.788	-0.126
10.0		-0.400	-0.428	-0.807	-0.870	-0.280
24.0		-0.649	-0.588	-0.898	-0.799	-0.382
33.0		-0.529	-0.853	-0.718	-0.718	-0.006
54.0		-0.405	-0.892	-0.873	-1.045	-2.136
73.5		-1.740	-0.484	-0.437	-0.526	0.263
84.0		-0.072	-0.172	-0.071	0.182	0.615
96.0		-0.013	-0.041	0.054	0.218	0.448

RUN 232 POINT 6 ALPHA 8.00 PSI 0.01 HEIGHT 87.88

X/C, %		BP 2	BP 6	BP 12	BP 16	BP 22
0.0	(UPPER)	-0.586	-0.550	-0.885	-1.846	-2.127
2.5		0.708	0.437	-0.908	-1.288	-1.853
5.0		0.521	0.352	-1.226	-1.164	-1.187
10.0		0.357	0.308	-1.384	-1.142	-1.061
15.0		0.248	0.001	-1.304	-1.131	-0.773
24.0		-0.123	-0.180	-1.232	-1.334	-0.812
33.0		-0.272	-0.344	-1.108	-1.449	-0.912
54.0		-1.478	-0.554	-1.184	-0.918	-0.932
65.0		-0.173	-0.884	-1.263	-1.876	-1.214
78.5		-0.206	-3.181	-3.515	-3.411	-3.593
79.5		-84.430	-78.304	-74.121	-59.483	-35.155
80.5		-8.916	-8.079	-8.678	-11.887	-0.537
81.5		-3.061	-3.224	-3.081	-4.203	-6.442
82.0		0.456	-1.884	2.324	-2.847	-3.034
84.0		-4.225	-3.958	-3.428	-3.293	-1.811
87.0		-0.441	-3.532	-1.218	-2.356	-0.724
89.0		-0.852	-1.508	-4.454	-2.193	-0.902
93.0		-0.614	-1.352	-0.703	-2.871	-0.105
98.0		-0.884	-1.264	-0.071	-0.740	-2.628
100.0		-0.527	-0.371	-0.446	-0.468	-0.606
2.5	(LOWER)	-0.623	-0.518	-0.819	-1.014	0.238
5.0		-0.661	-0.482	-0.700	-0.845	0.080
10.0		-0.455	-0.462	-0.787	-0.686	-0.082
24.0		-0.689	-0.625	-0.727	-0.701	-0.178
33.0		-0.532	-0.654	-0.668	-0.558	-0.029
54.0		-0.278	-0.552	-0.485	-0.908	-2.236
73.5		-1.755	-0.285	-0.161	-0.384	0.281
84.0		0.016	-0.004	-0.099	0.403	0.574
96.0		0.116	0.083	0.300	0.448	0.463

WING PRESSURE COEFFICIENTS

RUN 232 POINT 8 ALPHA 12.00 PSI 0.01 HEIGHT 66.70

X/C, %		BP 2	BP 6	BP 12	BP 16	BP 22
0.0	(UPPER)	-0.586	-0.510	-1.123	-1.824	-5.077
2.5		0.849	0.247	-1.004	-1.338	-2.784
5.0		0.448	0.141	-1.275	-1.298	-1.891
10.0		0.264	0.080	-1.441	-1.218	-1.558
15.0		0.153	-0.211	-1.385	-1.221	-1.143
24.0		-0.226	-0.349	-1.459	-1.382	-1.131
33.0		-0.365	-0.504	-1.426	-1.478	-1.182
54.0		-1.483	-0.600	-1.607	-0.778	-1.260
65.0		-0.198	-0.978	-1.710	-2.154	-1.834
78.5		-0.231	-3.364	-4.087	-4.380	-4.609
79.5		-86.077	-79.978	-77.065	-63.203	-37.798
80.5		-6.308	-6.403	-7.077	-12.898	-0.567
81.5		-3.305	-3.277	-3.578	-5.283	-7.878
82.0		0.299	-2.074	1.904	-3.635	-4.250
84.0		-4.491	-4.238	-3.856	-4.183	-2.863
87.0		-0.692	-3.204	-1.554	-3.062	-1.521
88.0		-1.054	-1.702	-4.904	-2.810	-1.548
93.0		-0.782	-1.516	-1.095	-3.294	-0.117
96.0		-1.026	1.400	-0.443	-0.954	-2.873
100.0		-0.863	-0.592	-0.605	-0.630	-0.671
2.5	(LOWER)	-0.628	[illegible]	-0.886	-0.819	0.345
5.0		-0.644	-0.451	-0.701	-0.487	0.298
10.0		-0.421	-0.430	-0.717	-0.331	0.155
24.0		-0.641	-0.564	-0.527	-0.346	0.026
33.0		-0.452	-0.528	-0.419	-0.186	-0.054
54.0		-0.081	-0.307	-0.147	-0.718	-2.258
73.5		-1.728	-0.050	0.099	-0.254	0.298
84.0		0.186	0.212	-0.119	0.639	0.588
96.0		0.289	0.235	0.448	0.574	0.464

RUN 232 POINT 13 ALPHA 22.03 PSI 0.01 HEIGHT 95.95

X/C, %		BP 2	BP 6	BP 12	BP 16	BP 22
0.0	(UPPER)	-2.494	-0.946	-1.667	-6.466	-5.815
2.5		0.456	-0.185	-1.243	-3.188	-5.828
5.0		0.176	-0.390	-1.331	-2.509	-6.330
10.0		-0.080	-0.512	-1.378	-2.083	-6.081
15.0		-0.220	-0.847	-1.333	-1.896	-3.930
24.0		-0.826	-0.874	-1.490	-1.861	-2.485
33.0		-0.745	-1.129	-1.578	-1.774	-2.143
54.0		-1.325	-0.981	-2.043	-0.473	-2.035
65.0		-0.307	-1.403	-2.291	-2.349	-2.352
78.5		-0.350	-3.851	-4.815	-4.904	-5.850
79.5		-65.418	-78.528	-72.064	-63.838	-38.622
80.5		-6.822	-6.992	-7.114	-13.405	-0.648
81.5		-4.045	-3.081	-4.121	-5.676	-8.858
82.0		-0.486	-2.595	1.318	-3.987	-5.212
84.0		-5.216	-4.728	-4.174	-4.456	-3.737
87.0		-1.539	-4.214	-1.931	-3.180	-1.994
88.0		-1.670	-2.161	-5.284	-2.636	-1.851
93.0		-1.257	-1.801	-1.520	-3.225	-0.720
96.0		-1.388	-1.681	-0.816	-0.863	-2.787
100.0		-1.111	-0.841	-0.629	-0.586	-0.678
2.5	(LOWER)	-1.272	-0.798	0.307	-0.204	-0.408
5.0		-0.780	-0.259	-0.049	0.049	0.110
10.0		-0.178	-0.780	0.003	0.288	0.280
24.0		-0.080	0.187	0.234	0.181	0.253
33.0		0.286	0.244	0.296	0.273	-0.156
54.0		0.492	0.285	0.345	-0.431	-2.131
73.5		-1.555	0.378	0.470	-0.098	0.092
84.0		0.525	0.868	0.224	0.703	0.285
96.0		0.520	0.549	0.679	0.672	0.253

WING PRESSURE COEFFICIENTS

RUN 233 POINT 2 ALPHA 0.05 PSI 0.01 HEIGHT 80.73

X/C, %		BP 2	BP 6	BP 12	BP 16	BP 22
0.0	(UPPER)	-0.729	-0.864	-0.954	-0.816	-0.138
2.5		0.781	0.724	-0.067	-0.507	-1.223
5.0		0.704	0.698	-0.045	-0.612	-1.149
10.0		0.613	0.462	-0.116	-0.862	-0.930
15.0		0.369	0.277	-0.288	-0.712	-0.908
24.0		0.184	0.146	-0.380	-0.731	-0.828
33.0		-0.121	-0.247	-0.533	-0.887	-0.837
54.0		-3.253	-0.855	-0.809	-1.811	-1.114
65.0		-0.258	-1.086	-1.182	-1.463	-1.545
78.5		-0.254	-3.823	-4.008	-4.273	-4.710
79.5		-145.874	-131.945	-113.788	-90.582	-60.050
80.5		7.838	-8.138	-10.408	-18.583	-0.515
81.5		-2.715	-10.986	-2.200	-5.839	-8.663
82.0		4.180	-1.704	8.795	-3.222	-2.883
84.0		-8.050	-4.483	-8.886	-3.525	-2.200
87.0		-0.001	-4.873	0.618	-2.076	-0.320
88.0		-8.724	-1.500	-8.274	-2.124	0.210
93.0		-0.421	-1.476	0.664	-3.312	-0.261
96.0		-0.066	-1.545	1.029	0.255	-3.118
100.0		-0.840	-1.188	-2.181	-2.230	-1.678
2.5	(LOWER)	-0.687	-0.713	-0.888	-0.888	-0.212
5.0		-0.848	-0.707	-0.801	-0.856	-0.367
10.0		-0.750	-0.673	-0.806	-0.842	-0.482
24.0		-0.758	-0.823	-0.800	-0.862	-0.627
33.0		-0.880	-0.807	-0.814	-0.831	-0.312
54.0		-0.045	-0.862	-0.825	-1.598	-3.036
73.5		-3.224	-0.743	-0.786	-1.158	0.370
84.0		-0.478	-0.633	-0.276	-0.154	0.668
96.0		-0.452	-0.424	-0.487	-0.181	0.364

RUN 233 POINT 4 ALPHA 4.06 PSI 0.01 HEIGHT 87.32

X/C, %		BP 2	BP 6	BP 12	BP 16	BP 22
0.0	(UPPER)	-0.890	-0.814	-0.975	-1.032	-1.043
2.5		0.738	0.555	-0.854	-0.910	-1.615
5.0		0.855	0.527	-0.578	-0.949	-1.362
10.0		0.553	0.351	-0.505	-0.971	-1.058
15.0		0.298	0.226	-0.649	-1.025	-1.010
24.0		0.110	0.046	-0.707	-1.048	-0.932
33.0		-0.178	-0.269	-0.789	-1.236	-0.947
54.0		-3.225	-0.775	-0.866	-1.510	-1.243
65.0		-0.238	-1.008	-1.278	-1.788	-1.980
78.5		-0.233	-3.499	-5.053	-4.458	-4.741
79.5		-145.896	-130.908	-114.288	-100.055	-80.022
80.5		-7.701	-7.880	-10.406	-18.637	-0.425
81.5		-2.561	-10.989	-2.370	-8.029	-8.850
82.0		4.462	-1.538	8.903	-3.311	-2.855
84.0		-5.918	-4.358	-8.861	-3.634	-2.322
87.0		0.158	-4.826	-0.052	-2.178	-0.468
88.0		-0.625	-1.486	-8.318	-2.287	0.071
93.0		-0.325	-1.571	0.003	-3.449	-0.244
96.0		-0.842	-1.700	0.960	0.008	-3.394
100.0		-1.312	-1.302	-1.900	-1.985	-1.573
2.5	(LOWER)	0.836	0.850	-0.973	-0.958	-0.038
5.0		-0.787	-0.845	-0.882	-0.836	-0.220
10.0		-0.886	-0.823	-0.901	-0.932	-0.354
24.0		-0.903	-0.930	-0.888	-0.908	-0.518
33.0		-1.003	-0.927	-0.981	-0.855	0.287
54.0		-0.882	-0.850	-0.901	-1.525	-3.788
73.5		-3.181	-0.609	-0.814	-1.023	0.336
84.0		-0.343	-0.471	-0.258	0.010	0.548
96.0		-0.398	-0.346	-0.300	-0.011	0.282

WING PRESSURE COEFFICIENTS

RUN 233 POINT 6 ALPHA 8.04 PSI 0.01 HEIGHT 88.06

X/C, %		BP 2	BP 6	BP 12	BP 16	BP 22
0.0	(UPPER)	-0.859	-0.818	-1.690	-1.447	-1.918
2.5		0.715	0.407	-1.150	-1.352	-1.910
5.0		0.816	0.373	-1.224	-1.309	-1.538
10.0		0.501	0.201	-1.220	-1.280	-1.181
15.0		0.238	0.005	-1.247	-1.311	-1.105
24.0		0.044	-0.073	-1.175	-1.398	-1.018
33.0		-0.241	-0.364	-1.171	-1.640	-1.031
54.0		-3.242	-0.795	-1.173	-1.368	-1.379
85.0		-0.248	-1.027	-1.387	-2.182	-1.812
78.5		-0.244	-3.578	-4.047	-4.584	-4.773
79.5		-149.810	-134.874	-117.362	-102.688	-81.424
80.5		-7.809	-8.094	-10.570	-18.989	-0.458
81.5		-2.601	-11.250	-2.385	-6.177	-8.845
82.0		4.476	-1.723	6.843	-3.516	-2.864
84.0		-6.1[illegible]	-4.495	-7.385	-3.881	-2.516
87.0		0.081	-5.072	-0.134	-2.429	-0.727
89.0		-0.730	-1.829	-6.572	-2.538	-0.128
93.0		-0.424	-1.697	-0.137	-3.752	-0.255
96.0		-0.997	-1.825	0.782	-0.155	-3.782
100.0		-1.022	-1.001	-1.457	-1.683	-1.413
2.5	(LOWER)	-0.856	-0.880	-1.061	-1.081	0.060
5.0		-0.804	-0.883	-0.985	-1.025	-0.113
10.0		-0.944	-0.849	-0.988	-1.018	-0.243
24.0		-0.958	-1.014	-0.976	-0.948	-0.424
33.0		-1.073	-1.010	-1.087	-0.870	-0.302
54.0		-0.835	-0.891	-0.868	-1.517	-3.873
73.5		-3.230	-0.501	-0.438	-0.978	0.389
84.0		-0.193	-0.331	-0.282	0.182	0.554
96.0		-0.361	-0.220	-0.088	0.171	0.351

RUN 233 POINT 8 ALPHA 12.03 PSI 0.01 HEIGHT 88.17

X/C, %		BP 2	BP 6	BP 12	BP 16	BP 22
0.0	(UPPER)	-0.873	-0.815	-1.328	-1.835	-2.880
2.5		0.877	0.203	-1.370	-1.758	-2.217
5.0		0.585	0.188	-1.578	-1.863	-1.774
10.0		0.454	0.021	-1.700	-1.526	-1.320
15.0		0.185	-0.080	-1.784	-1.532	-1.281
24.0		-0.027	-0.244	-1.885	-1.800	-1.171
33.0		-0.325	-0.518	-1.848	-1.890	-1.188
54.0		-3.245	-0.842	-1.530	-1.192	-1.604
85.0		-0.270	-1.099	-1.870	-2.546	-2.118
78.5		-0.260	-3.782	-4.380	-5.028	-5.505
79.5		-150.778	-138.122	-119.234	-104.087	-83.070
80.5		-8.104	-8.314	-10.904	-19.851	-0.523
81.5		-2.913	-11.180	-2.803	-6.734	-9.900
82.0		4.351	-1.987	6.416	-4.002	-3.860
84.0		-6.385	-4.719	-7.856	-4.384	-3.522
87.0		-0.120	-5.297	-0.474	-3.024	-1.746
89.0		-0.919	-1.888	-7.026	-3.134	-1.093
93.0		-0.590	-1.910	-0.554	-4.304	-0.259
96.0		-1.127	-2.012	0.427	-0.613	-4.526
100.0		-0.923	-0.884	-1.029	-1.231	-1.288
2.5	(LOWER)	-0.872	-0.887	-1.192	-1.277	0.141
5.0		-0.803	-0.908	-1.116	-1.185	0.008
10.0		-0.827	-0.856	-1.105	-1.097	-0.098
24.0		-0.970	-1.057	-1.048	-0.906	-0.279
33.0		-1.090	-1.035	-1.073	-0.782	-0.332
54.0		-0.860	-0.751	-0.685	-1.375	-3.845
73.5		-3.177	-0.305	-0.152	-0.844	0.438
84.0		-0.080	-0.172	-0.292	0.376	0.568
96.0		-0.278	-0.082	0.215	0.435	0.426

WING PRESSURE COEFFICIENTS

RUN 233 POINT 13 ALPHA 22.08 PSI 0.01 HEIGHT 97.07

X/C, %		BP 2	BP 6	BP 12	BP 16	BP 22
0.0	(UPPER)	-0.808	-0.717	-2.148	-3.168	-6.870
2.5		0.538	-0.311	-1.737	-2.383	-5.822
5.0		0.373	-0.438	-1.728	-2.170	-5.004
10.0		0.187	-0.825	-1.808	-1.811	-3.812
15.0		-0.144	-0.703	-1.961	-1.847	-2.878
24.0		-0.355	-0.809	-2.048	-1.709	-2.226
33.0		-0.631	-1.047	-2.154	-2.009	-2.054
54.0		-3.020	-1.171	-2.306	-0.892	-2.372
85.0		-0.383	-1.475	-2.548	-2.903	-2.883
78.5		-0.374	-4.332	-5.545	-6.083	-6.846
79.5		-150.005	-137.201	-122.639	-106.009	-84.112
80.5		-8.856	-8.868	-11.723	-20.818	-0.500
81.5		-3.853	-10.708	-3.882	-7.577	-11.180
82.0		3.537	-2.703	5.325	-5.023	-5.189
84.0		-7.245	-5.383	-8.800	-5.187	-4.582
87.0		-1.136	-5.929	-1.282	-3.860	-2.376
89.0		-1.856	-2.539	-7.914	-3.848	-1.428
93.0		-1.154	-2.441	-1.499	-4.682	-0.395
96.0		-1.591	-2.444	-0.493	-0.880	-4.168
100.0		-1.081	-1.828	-1.721	-1.804	-1.537
2.5	(LOWER)	-0.798	-0.814	-1.251	-0.189	-0.033
5.0		-0.728	-0.809	-0.997	-0.115	0.281
10.0		-0.822	-0.771	-0.850	-0.091	0.371
24.0		-0.798	-0.828	-0.481	0.003	0.181
33.0		-0.812	-0.638	-0.374	0.104	-0.431
54.0		-0.148	-0.074	0.037	-0.988	-3.827
73.5		-2.944	0.230	0.366	-0.492	0.460
84.0		0.223	0.308	-0.410	0.723	0.584
96.0		0.189	0.215	0.356	0.524	0.382

RUN 235 POINT 21 ALPHA 0.00 PSI 0.00 HEIGHT 87.47

X/C, %		BP 2	BP 6	BP 12	BP 16	BP 22
0.0	(UPPER)	0.514	0.504	0.475	0.578	0.510
2.5		-0.124	-0.282	-0.335	-0.320	-0.209
5.0		-0.113	-0.225	-0.253	-0.331	-0.348
10.0		-0.170	-0.325	-0.296	-0.291	-0.216
15.0		-0.187	-0.198	-0.348	-0.270	-0.330
24.0		-0.105	-0.225	-0.292	-0.174	-0.228
33.0		-0.132	-0.188	-0.298	-0.214	-0.178
54.0		0.026	-0.157	-0.216	0.004	-0.306
85.0		0.002	-0.313	-0.322	-0.384	-0.484
78.5		0.111	-0.513	-0.528	-0.858	-0.985
79.5		-0.530	-0.586	-0.482	-0.787	-1.041
80.5		-0.390	-0.301	-0.497	-0.480	0.112
81.5		-0.288	-0.194	-0.478	-0.844	-0.910
82.0		-0.129	-0.568	-0.568	-0.721	-1.033
84.0		-0.429	-0.274	-1.195	-0.482	-1.273
87.0		-0.500	-0.438	-0.501	-0.538	-1.279
89.0		-0.427	-0.412	-0.508	-0.583	-1.012
93.0		-0.385	-0.418	-0.501	-0.549	0.083
96.0		-0.388	-0.470	-0.481	-0.591	-0.923
100.0		-0.331	-0.397	-0.487	-0.542	-0.517
2.5	(LOWER)	0.083	0.002	0.069	0.126	0.020
5.0		0.075	-0.072	-0.002	0.055	0.008
10.0		-0.071	-0.045	0.024	-0.018	0.013
24.0		0.027	-0.080	0.015	0.061	-0.016
33.0		-0.090	0.018	0.040	0.095	0.018
54.0		0.054	0.180	0.193	0.298	0.523
73.5		0.712	0.581	0.583	0.891	0.538
84.0		0.488	0.592	0.051	0.578	0.529
96.0		0.193	0.257	0.248	0.263	0.223

WING PRESSURE COEFFICIENTS

RUN 235 POINT 23 ALPHA 4.00 PSI 0.00 HEIGHT 88.15

X/C, %		BP 2	BP 6	BP 12	BP 16	BP 22
0.0	(UPPER)	0.135	-0.211	-0.534	-0.685	-0.783
2.5		-0.541	-0.722	-0.956	-1.117	-1.068
5.0		-0.445	-0.522	-0.829	-0.760	-0.756
10.0		-0.494	-0.452	-0.575	-0.614	-0.591
15.0		-0.378	-0.439	-0.477	-0.527	-0.472
24.0		-0.324	-0.348	-0.379	-0.437	-0.461
33.0		-0.290	-0.315	-0.342	-0.370	-0.345
54.0		-0.079	-0.194	-0.341	0.168	-0.326
65.0		0.061	-0.300	-0.415	-0.427	-0.303
78.5		0.055	-0.611	-0.640	-0.658	-0.653
79.5		-0.484	-0.543	-0.583	-0.508	-0.913
80.5		-0.457	-0.519	-0.554	-0.626	0.078
81.5		-0.484	-0.529	-0.523	-0.635	-0.877
82.0		-0.453	-0.400	-0.485	-0.617	-0.878
84.0		-0.448	-0.471	-0.479	-0.530	-0.854
87.0		-0.436	-0.484	-0.548	-0.618	-0.884
88.0		-0.425	-0.458	-0.538	-0.621	-0.886
93.0		-0.462	-0.481	-0.558	-0.662	0.077
98.0		-0.500	-0.472	-0.581	-0.670	-0.868
100.0		-0.257	-0.411	-0.494	-0.576	-0.844
2.5	(LOWER)	0.323	0.358	0.383	0.403	0.407
5.0		0.244	0.304	0.300	0.300	0.288
10.0		0.187	0.271	0.291	0.237	0.178
24.0		0.108	0.103	0.128	0.104	0.072
33.0		0.080	0.117	0.131	0.146	0.074
54.0		0.173	0.171	0.203	0.079	0.130
73.5		0.290	0.503	0.533	0.286	0.442
84.0		0.508	0.616	0.668	0.672	0.950
98.0		0.263	0.282	0.270	0.230	0.128

RUN 235 POINT 25 ALPHA 8.02 PSI 0.00 HEIGHT 88.91

X/C, %		BP 2	BP 6	BP 12	BP 16	BP 22
0.0	(UPPER)	-1.100	-2.101	-3.303	-3.817	-3.235
2.5		-1.052	-1.279	-1.804	-2.051	-1.832
5.0		-0.812	-1.030	-1.280	-1.488	-1.723
10.0		-0.888	-0.866	-0.992	-1.108	-1.054
15.0		-0.888	-0.807	-0.788	-0.814	-1.201
24.0		-0.504	-0.537	-0.619	-0.726	-0.795
33.0		-0.436	-0.478	-0.545	-0.611	-0.583
54.0		-0.117	-0.212	-0.531	0.057	-0.817
65.0		0.048	-0.548	-0.648	-0.881	-0.780
78.5		0.041	-1.102	-1.287	-1.287	-1.080
79.5		-1.326	-1.251	-1.382	-1.448	-2.380
80.5		-1.285	-1.061	-1.174	-1.254	0.054
81.5		-1.026	-0.956	-1.047	-1.219	-2.390
82.0		-0.858	-0.827	-0.885	-1.147	-2.347
84.0		-0.849	-0.756	-0.784	-1.040	-1.834
87.0		-0.584	-0.613	-0.761	-0.848	-1.360
88.0		-0.543	-0.548	-0.800	-0.750	-1.158
93.0		-0.487	-0.473	-0.572	-0.879	0.068
98.0		-0.384	-0.390	-0.528	-0.582	-0.786
100.0		-0.281	-0.257	-0.372	-0.458	-0.854
2.5	(LOWER)	0.543	0.558	0.558	0.537	0.546
5.0		0.448	0.388	0.505	0.505	0.468
10.0		0.387	0.477	0.387	0.419	0.334
24.0		0.234	0.248	0.258	0.238	0.158
33.0		0.188	0.235	0.248	0.258	0.068
54.0		0.263	0.254	0.284	0.104	0.065
73.5		0.248	0.550	0.588	0.253	0.412
84.0		0.578	0.682	0.658	0.620	0.408
98.0		0.380	0.276	0.252	0.312	0.184

WING PRESSURE COEFFICIENTS

RUN 235 POINT 27 ALPHA 12.05 PSI 0.00 HEIGHT 87.38

X/C, %		BP 2	BP 6	BP 12	BP 16	BP 22
0.0	(UPPER)	-2.800	-4.006	-6.002	-2.722	-1.473
2.5		-1.644	-2.122	-2.645	-2.516	-1.395
5.0		-1.194	-1.529	-1.986	-2.433	-1.252
10.0		-0.948	-1.128	-1.450	-2.503	-1.372
15.0		-0.815	-0.955	-1.154	-2.340	-1.288
24.0		-0.851	-0.717	-0.850	-1.521	-1.271
33.0		-0.120	-0.812	-0.706	-0.838	-1.190
54.0		-0.120	-0.278	-0.598	0.031	-1.117
65.0		0.047	-0.588	-0.688	-0.583	-1.172
78.5		0.030	-1.130	-1.178	-1.211	-1.701
79.5		-1.225	-1.229	-1.315	-1.422	-1.027
80.5		-1.102	-0.938	-1.078	-1.318	0.050
81.5		-0.981	-0.953	-0.982	-1.304	-1.825
82.0		-0.883	-0.839	-0.779	-1.122	-1.768
84.0		-0.835	-0.583	-0.511	-1.021	-1.585
87.0		-0.548	-0.477	-0.556	-0.701	-1.452
88.0		-0.484	-0.437	-0.498	-0.701	-1.377
93.0		-0.438	-0.420	-0.471	-0.609	0.981
98.0		-0.384	-0.384	-0.484	-0.527	-1.033
100.0		-0.279	-0.281	-0.388	-0.415	-0.926
2.5	(LOWER)	0.640	0.588	0.545	0.547	0.521
5.0		0.582	0.510	0.509	0.588	0.498
10.0		0.505	0.598	0.513	0.523	0.388
24.0		0.232	0.348	0.363	0.320	0.203
33.0		0.298	0.318	0.327	0.323	0.087
54.0		0.318	0.302	0.322	0.102	0.068
73.5		0.200	0.570	0.577	0.280	0.202
84.0		0.632	0.688	0.657	0.632	0.468
98.0		0.404	0.375	0.358	0.322	0.198

RUN 235 POINT 32 ALPHA 22.08 PSI 0.00 HEIGHT 88.11

X/C, %		BP 2	BP 6	BP 12	BP 16	BP 22
0.0	(UPPER)	-1.710	-1.401	-1.161	-1.120	-0.920
2.5		-1.808	-1.385	-1.148	-1.071	-0.922
5.0		-1.580	-1.378	-1.176	-1.053	-0.885
10.0		-1.407	-1.343	-1.164	-1.080	-0.941
15.0		-1.436	-1.303	-1.128	-1.073	-0.874
24.0		-1.370	-1.270	-1.110	-1.088	-0.921
33.0		-1.139	-1.224	-1.106	-1.048	-0.925
54.0		-0.318	-0.472	-1.076	-0.928	-0.930
65.0		-0.928	-0.958	-1.037	-0.987	-0.888
78.5		-0.835	-0.929	-0.986	-1.004	-0.943
79.5		-0.932	-0.893	-0.952	-0.871	-0.928
80.5		-0.995	-0.864	-0.930	-0.981	-0.928
81.5		-1.007	-0.810	-0.884	-0.927	-0.954
82.0		-1.017	-0.783	-0.808	-0.872	-0.922
84.0		-0.813	-0.873	-0.814	-0.947	-0.787
87.0		-0.741	-0.774	-0.805	-0.888	-0.811
88.0		-0.881	-0.730	-0.818	-0.883	-0.888
93.0		-0.880	-0.705	-0.802	-0.872	-0.848
98.0		-0.883	-0.887	-0.810	-0.835	-0.814
100.0		-0.484	-0.572	-0.718	-0.804	-0.847
2.5	(LOWER)	0.783	0.844	0.561	0.488	0.452
5.0		0.788	0.873	0.850	0.595	0.590
10.0		0.711	0.711	0.801	0.598	0.480
24.0		0.472	0.494	0.477	0.413	0.395
33.0		0.440	0.437	0.422	0.404	0.090
54.0		0.380	0.260	0.388	0.031	0.087
73.5		0.142	0.577	0.578	0.275	0.382
84.0		0.827	0.712	0.813	0.814	0.487
98.0		0.273	0.327	0.265	0.201	0.058

WING PRESSURE COEFFICIENTS

RUN 230 POINT 2 ALPHA -0.01 PSI 0.00 HEIGHT 80.24

X/C, %		BP 2	BP 6	BP 12	BP 16	BP 22
0.0	UPPER	0.488	0.230	-0.063	-0.300	-0.820
2.5		-0.290	-0.501	-0.730	-0.878	-1.052
5.0		-0.381	-0.470	-0.638	-0.766	-0.791
10.0		-0.381	-0.445	-0.604	-0.669	-0.722
15.0		-0.404	-0.482	-0.515	-0.826	-0.573
24.0		-0.438	-0.420	-0.463	-0.633	-0.507
33.0		-0.418	-0.457	-0.516	-0.580	-0.501
54.0		-0.530	-0.546	-0.740	-0.348	-0.734
80.0		-0.925	-0.944	-1.101	-1.129	-1.004
78.5		-0.040	-2.800	-3.113	-3.192	-3.300
79.5		-47.805	-44.957	-44.863	-37.747	-21.378
80.5		-3.963	-6.201	-2.804	-7.757	-0.001
81.5		-2.438	-1.348	-2.733	-2.951	-4.874
82.0		-0.448	-1.832	0.357	-2.883	-2.721
84.0		-2.927	-2.854	-2.743	-2.547	-1.885
87.0		-0.738	-2.348	-1.232	-1.881	-1.212
88.0		-0.835	-1.183	-2.854	-1.585	-1.056
93.0		-0.906	-0.880	-0.885	-1.732	0.010
98.0		-0.847	-0.734	-0.958	-0.250	-1.817
100.0		-0.502	-0.456	-0.478	-0.428	-0.843
2.5	LOWER	0.160	0.240	0.285	0.300	0.370
5.0		0.121	0.174	0.238	0.230	0.242
10.0		0.142	0.200	0.148	0.267	0.134
24.0		0.068	0.115	0.134	0.078	0.068
33.0		0.108	0.143	0.157	0.108	0.017
54.0		0.258	0.233	0.278	-0.028	-0.448
73.5		-0.230	0.542	0.500	0.131	0.305
84.0		0.527	0.857	0.808	0.952	0.434
98.0		0.481	0.529	0.544	0.481	0.240

RUN 230 POINT 4 ALPHA 4.07 PSI 0.00 HEIGHT 80.07

X/C, %		BP 2	BP 6	BP 12	BP 16	BP 22
0.0	UPPER	-0.354	-1.140	-2.130	-2.801	-3.470
2.5		-0.882	-1.048	-1.453	-1.732	-2.188
5.0		-0.882	-0.882	-1.140	-1.292	-1.490
10.0		-0.833	-0.731	-0.951	-1.088	-1.193
15.0		-0.906	-0.714	-0.783	-0.953	-0.810
24.0		-0.575	-0.501	-0.887	-0.881	-0.849
33.0		-0.546	-0.580	-0.875	-0.779	-0.801
54.0		-0.581	-0.587	-0.862	-0.318	-0.549
80.0		-0.920	-1.018	-1.290	-1.201	-1.242
78.5		-0.035	-2.805	-3.242	-3.377	-3.752
79.5		-47.836	-45.418	-45.430	-38.504	-22.360
80.5		-3.865	-4.177	-2.872	-7.917	0.064
81.5		-2.448	-1.261	-2.858	-3.736	-5.241
82.0		-0.422	-1.963	0.282	-2.873	-3.247
84.0		-2.924	-2.881	-2.830	-2.722	-2.430
87.0		-0.766	-2.205	-1.304	-1.822	-1.862
88.0		-0.823	-1.181	-2.917	-1.710	-1.453
93.0		-0.580	-0.814	-0.825	-1.049	0.015
98.0		-0.838	-0.747	-0.884	-0.444	-2.187
100.0		-0.558	-0.432	-0.447	-0.448	-0.707
2.5	LOWER	0.418	0.488	0.504	0.477	0.518
5.0		0.234	0.245	0.448	0.437	0.424
10.0		0.304	0.413	0.321	0.377	0.287
24.0		0.188	0.226	0.246	0.188	0.137
33.0		0.200	0.228	0.244	0.248	0.024
54.0		0.311	0.281	0.318	-0.001	-0.487
73.5		-0.271	0.580	0.582	0.155	0.308
84.0		0.578	0.896	0.840	0.848	0.385
98.0		0.520	0.557	0.550	0.495	0.184

WING PRESSURE COEFFICIENTS

RUN 230 POINT 6 ALPHA 8.00 PSI 0.00 HEIGHT 87.51

X/C, %		BP 2	BP 6	BP 12	BP 16	BP 22
0.0	UPPER	-1.064	-2.588	-5.718	-1.028	-1.982
2.5		-1.275	-1.829	-2.556	-3.468	-1.870
5.0		-1.075	-1.382	-1.834	-3.514	-1.741
10.0		-0.908	-1.085	-1.405	-2.837	-1.785
15.0		-0.823	-0.975	-1.131	-1.225	-1.844
24.0		-0.737	-0.785	-0.923	-0.817	-1.835
33.0		-0.874	-0.742	-0.885	-0.830	-1.548
54.0		-0.805	-0.804	-0.861	-0.798	-1.484
80.0		-0.823	-1.086	-1.304	-1.307	-1.700
78.5		-0.037	-2.952	-3.350	-3.478	-3.878
79.5		-48.240	-45.778	-45.768	-38.033	-22.863
80.5		-3.805	-4.204	-3.024	-8.082	-0.078
81.5		-2.471	-1.304	-2.977	-3.872	-5.883
82.0		-0.441	-2.018	0.182	-3.008	-3.952
84.0		-2.834	-2.795	-2.907	-2.885	-3.252
87.0		-0.883	-2.400	-1.367	-1.833	-2.450
88.0		-0.811	-1.295	-2.987	-1.817	-2.220
93.0		-0.577	-0.839	-0.888	-1.950	0.018
98.0		-0.831	-0.708	-0.139	-0.519	-2.871
100.0		-0.522	-0.398	-0.435	-0.443	-0.744
2.5	LOWER	0.577	0.584	0.525	0.492	0.500
5.0		0.503	0.479	0.567	0.543	0.482
10.0		0.454	0.553	0.480	0.501	0.341
24.0		0.288	0.379	0.350	0.279	0.188
33.0		0.287	0.318	0.324	0.317	0.020
54.0		0.363	0.333	0.363	-0.010	-0.529
73.5		-0.308	0.588	0.607	0.174	0.222
84.0		0.830	0.737	0.810	0.881	0.305
98.0		0.556	0.581	0.574	0.485	0.150

RUN 230 POINT 8 ALPHA 12.01 PSI 0.00 HEIGHT 88.98

X/C, %		BP 2	BP 6	BP 12	BP 16	BP 22
0.0	UPPER	-4.188	-5.878	-4.401	-3.036	-2.287
2.5		-2.148	-5.190	-3.447	-2.194	-2.226
5.0		-1.807	-2.088	-3.182	-3.119	-2.173
10.0		-1.292	-1.230	-2.800	-3.182	-2.274
15.0		-1.129	-1.212	-2.258	-3.133	-2.148
24.0		-0.983	-0.954	-1.806	-2.588	-2.233
33.0		-0.832	-0.883	-1.141	-1.758	-2.290
54.0		-0.854	-0.821	-0.872	-0.275	-2.721
80.0		-0.824	-1.148	-1.247	-1.210	-2.844
78.5		-0.042	-3.005	-3.207	-3.173	-4.530
79.5		-48.780	-43.950	-43.753	-38.131	-22.498
80.5		-4.180	-4.881	-3.814	-7.843	-0.088
81.5		-2.522	-1.442	-2.887	-3.734	-7.248
82.0		-0.854	-2.051	0.198	-2.854	-5.425
84.0		-2.836	-2.822	-2.788	-2.812	-4.520
87.0		-0.707	-2.457	-1.412	-1.881	-3.304
88.0		-0.842	-1.205	-2.953	-1.830	-2.874
93.0		-0.826	-0.985	-0.702	-1.985	0.010
98.0		-0.872	-0.804	-0.188	-0.503	-1.982
100.0		-0.482	-0.336	-0.432	-0.484	-0.787
2.5	LOWER	0.849	0.587	0.483	0.407	0.402
5.0		0.834	0.801	0.811	0.551	0.480
10.0		0.548	0.850	0.538	0.585	0.492
24.0		0.388	0.431	0.434	0.353	0.234
33.0		0.388	0.388	0.395	0.378	0.018
54.0		0.421	0.383	0.405	-0.034	-0.587
73.5		-0.341	0.829	0.824	0.198	0.224
84.0		0.882	0.786	0.810	0.863	0.278
98.0		0.599	0.611	0.594	0.456	0.138

WING PRESSURE COEFFICIENTS

RUN 236 POINT 13 ALPHA 22.10 PSI 0.00 HEIGHT 98.00

X/C. %		BP 2	BP 6	BP 12	BP 16	BP 22
0.0	UPPER	-12.202	-7.444	-4.027	-3.304	-2.285
2.5		-4.063	-7.777	-4.224	-3.343	-2.367
5.0		-2.235	-6.196	-4.370	-3.421	-2.381
10.0		-2.301	-4.098	-4.004	-3.250	-2.542
15.0		-1.050	-2.115	-5.032	-3.088	-2.440
24.0		-1.406	-1.304	-4.520	-4.210	-2.523
33.0		-1.186	-1.122	-3.027	-4.205	-2.408
54.0		-0.795	-0.884	-0.868	-0.290	-2.058
65.0		-0.001	-1.347	-1.606	-1.836	-2.231
78.5		-0.030	-2.104	-2.331	-2.081	-2.000
79.5		-60.051	-64.680	-64.830	-30.283	-10.575
80.5		-4.008	-4.063	-3.734	-7.734	-0.104
81.5		-2.505	-1.488	-3.352	-3.053	-0.443
82.0		-0.505	-2.243	-0.174	-2.042	-4.834
84.0		-3.024	-3.038	-3.172	-2.001	-3.044
87.0		-0.837	-2.834	-1.790	-2.277	-2.771
90.0		-0.075	-1.417	-3.371	-2.170	-2.540
93.0		-0.733	-1.131	-0.074	-2.383	0.010
96.0		-0.750	-0.833	-0.361	-0.954	-2.540
100.0		-0.213	-0.240	-0.307	-0.470	-0.907
2.5	LOWER	0.527	0.107	0.130	0.041	0.075
5.0		0.825	0.771	0.505	0.483	0.304
10.0		0.844	0.853	0.843	0.840	0.443
24.0		0.586	0.640	0.660	0.406	0.239
33.0		0.575	0.575	0.547	0.519	0.075
54.0		0.538	0.506	0.506	0.038	-0.014
73.5		-0.300	0.074	0.050	0.200	0.170
84.0		0.001	0.017	0.011	0.051	0.232
96.0		0.004	0.076	0.020	0.476	0.020

RUN 237 POINT 2 ALPHA 0.00 PSI 0.00 HEIGHT 98.36

X/C. %		BP 2	BP 6	BP 12	BP 16	BP 22
0.0	UPPER	0.243	0.070	-0.256	-0.533	-1.000
2.5		-0.472	-0.843	-0.831	-1.112	-1.344
5.0		-0.452	-0.812	-0.815	-0.904	-1.002
10.0		-0.478	-0.570	-0.716	-0.814	-0.805
15.0		-0.527	-0.804	-0.667	-0.772	-0.754
24.0		-0.504	-0.558	-0.620	-0.729	-0.738
33.0		-0.534	-0.572	-0.664	-0.744	-0.746
54.0		-0.120	-0.500	-0.926	0.546	-0.927
65.0		-0.095	-1.150	-1.304	-1.361	-1.276
78.5		-0.095	-3.301	-3.763	-3.000	-4.038
79.5		-80.227	-83.291	-81.007	-87.204	-30.037
80.5		-6.420	-6.173	-5.517	-12.200	-0.335
81.5		-3.100	-1.466	-3.078	-4.008	-6.667
82.0		0.006	-2.040	2.758	-3.210	-3.007
84.0		-4.456	-3.747	-4.007	-3.251	-2.244
87.0		-0.532	-3.617	-1.341	-1.948	-1.000
90.0		-0.922	-1.437	-4.078	-1.907	-0.741
93.0		-0.064	-1.200	-0.462	-2.539	-0.074
96.0		-0.000	-1.161	0.336	-0.114	-2.510
100.0		-1.290	-1.163	-1.181	-1.001	-1.168
2.5	LOWER	0.121	0.203	0.204	0.295	0.346
5.0		0.100	0.121	0.186	0.217	0.203
10.0		0.074	0.142	0.107	0.150	0.106
24.0		0.040	0.052	0.090	0.040	0.006
33.0		0.054	0.002	0.095	0.112	-0.000
54.0		0.201	0.188	0.222	0.231	-1.130
73.5		0.102	0.483	0.507	0.501	0.204
84.0		0.443	0.003	-0.007	0.007	0.353
96.0		0.300	0.441	0.472	0.392	0.130

WING PRESSURE COEFFICIENTS

RUN 237 POINT 5 ALPHA 2.90 PSI 0.00 HEIGHT 87.36

X/C. %		BP 2	BP 6	BP 12	BP 16	BP 22
0.0	UPPER	-0.510	-1.375	-2.484	-3.210	-3.001
2.5		-1.011	-1.155	-1.560	-1.831	-3.267
5.0		-0.705	-0.906	-1.283	-1.470	-1.040
10.0		-0.712	-0.850	-1.000	-1.230	-1.300
15.0		-0.711	-0.009	-0.932	-1.000	-1.053
24.0		-0.050	-0.003	-0.816	-0.060	-0.002
33.0		-0.054	-0.703	-0.820	-0.925	-0.030
54.0		-0.427	-0.032	-1.041	0.182	-1.120
65.0		-0.002	-1.232	-1.412	-1.407	-1.401
78.5		-0.006	-2.400	-2.903	-4.073	-4.430
79.5		-87.432	-81.562	-79.210	-85.157	-37.002
80.5		-6.000	-6.015	-6.522	-12.537	-0.201
81.5		-3.170	-1.700	-3.140	-4.904	-7.123
82.0		0.016	-2.070	2.595	-3.340	-3.837
84.0		-4.403	-3.706	-4.030	-3.414	-2.863
87.0		-0.404	-3.015	-1.432	-2.067	-1.507
90.0		-0.000	-1.462	-4.710	-2.034	-1.100
93.0		-0.063	-1.290	0.534	-2.000	-0.072
96.0		-0.001	-1.160	0.237	-0.256	-2.000
100.0		-1.243	-1.120	-1.124	-1.000	-1.220
2.5	LOWER	0.300	0.430	0.463	0.432	0.071
5.0		0.310	0.292	0.300	0.300	0.367
10.0		0.240	0.251	0.276	0.326	0.247
24.0		0.150	0.170	0.217	0.144	0.073
33.0		0.150	0.105	0.183	0.190	-0.067
54.0		0.250	0.210	0.251	-0.004	-1.050
73.5		-0.183	0.514	0.520	0.244	0.236
84.0		0.506	0.638	-0.060	0.003	0.307
96.0		0.444	0.476	0.493	0.392	0.072

RUN 237 POINT 7 ALPHA 8.00 PSI 0.00 HEIGHT 98.36

X/C. %		BP 2	BP 6	BP 12	BP 16	BP 22
0.0	UPPER	-2.107	-3.883	-4.211	-4.114	-2.181
2.5		-1.483	-1.877	-2.586	-3.842	-2.043
5.0		-1.201	-1.500	-2.232	-3.740	-1.007
10.0		-1.020	-1.220	-1.005	-3.378	-1.000
15.0		-0.900	-1.127	-1.374	-1.507	-1.057
24.0		-0.052	-0.924	-1.131	-0.002	-1.030
33.0		-0.000	-0.878	-1.075	-0.979	-1.702
54.0		-0.774	-1.110	-1.100	-0.105	-1.076
65.0		-0.110	-1.320	-1.554	-1.550	-2.130
78.5		-0.110	-3.507	-3.901	-4.232	-4.702
79.5		-87.011	-81.220	-79.379	-85.224	-37.000
80.5		-6.550	-6.132	-6.007	-12.920	-0.320
81.5		-3.211	-1.991	-3.208	-5.106	-8.130
82.0		0.772	-2.137	2.600	-3.550	-4.724
84.0		-4.263	-3.050	-4.006	-3.045	-3.052
87.0		-0.406	-3.663	-1.446	-2.243	-2.700
90.0		-0.060	-1.404	-4.005	-2.207	-2.205
93.0		-0.063	-1.342	-0.001	-2.601	0.073
96.0		-0.006	-1.209	0.117	-0.303	-3.020
100.0		-1.100	-1.004	-1.104	-1.106	-1.205
2.5	LOWER	0.503	0.520	0.457	0.412	0.425
5.0		0.450	0.434	0.482	0.481	0.382
10.0		0.370	0.404	0.393	0.437	0.284
24.0		0.220	0.205	0.307	0.213	0.095
33.0		0.235	0.242	0.250	0.252	-0.075
54.0		0.303	0.255	0.282	-0.347	-1.771
73.5		-0.521	0.534	0.537	-0.004	0.144
84.0		0.545	0.070	-0.072	0.004	0.221
96.0		0.407	0.491	0.497	0.377	0.000

WING PRESSURE COEFFICIENTS

RUN 237 POINT 9 ALPHA 11.00 PSI 0.00 HEIGHT 00.50

X/C. %		BP 2	BP 6	BP 12	BP 16	BP 22
0.0	(UPPER)	-4.400	-5.070	-3.500	-2.923	-2.330
2.5		-2.275	-4.761	-3.630	-2.635	-2.303
5.0		-1.706	-4.700	-3.604	-2.872	-2.202
10.0		-1.371	-1.050	-3.481	-3.047	-2.308
15.0		-1.250	-1.156	-3.290	-3.156	-2.254
24.0		-1.040	-1.003	-1.020	-3.140	-2.344
33.0		-0.835	-0.836	-0.910	-2.020	-2.421
54.0		-0.972	-1.254	-0.904	-0.366	-3.119
65.0		-0.000	-1.332	-1.401	-1.195	-3.538
78.5		-0.111	-3.051	-2.002	-3.026	-5.730
79.5		-83.074	-78.411	-75.605	-81.133	-36.700
80.5		-0.300	-0.100	-0.004	-12.377	-0.200
81.5		-3.102	-1.003	-3.423	-4.700	-0.964
82.0		0.004	-2.215	2.140	-3.311	-0.004
84.0		-4.316	-3.000	-4.023	-3.557	-2.718
87.0		-0.405	-2.043	-1.545	-2.225	-3.725
88.0		-0.000	-1.540	-4.001	-2.141	-3.007
93.0		-0.071	-1.257	-0.074	-2.720	-0.053
96.0		-0.005	-1.201	0.053	-0.435	-3.838
100.0		-1.000	-0.004	-1.038	-1.013	-1.263
2.5	(LOWER)	0.501	0.525	0.425	0.333	0.335
5.0		0.500	0.500	0.500	0.404	0.306
10.0		0.541	0.509	0.492	0.517	0.340
24.0		0.347	0.381	0.400	0.298	0.176
33.0		0.340	0.330	0.335	0.229	-0.050
54.0		0.363	0.331	0.337	-0.382	-1.020
73.5		-0.732	0.574	0.503	-0.209	0.126
84.0		0.000	0.007	-0.054	0.027	0.205
96.0		0.550	0.532	0.536	0.298	0.010

RUN 237 POINT 14 ALPHA 22.01 PSI 0.00 HEIGHT 00.00

X/C. %		BP 2	BP 6	BP 12	BP 16	BP 22
0.0	(UPPER)	-13.504	-8.207	-4.400	-3.007	-2.007
2.5		-5.174	-9.142	-4.795	-3.735	-2.075
5.0		-3.424	-9.500	-4.000	-3.004	-2.003
10.0		-2.400	-3.003	-5.005	-4.051	-2.030
15.0		-2.050	-1.041	-6.101	-4.314	-2.023
24.0		-1.571	-1.357	-4.750	-5.101	-2.956
33.0		-1.204	-1.225	-2.405	-4.000	-2.003
54.0		-1.402	-1.533	-0.024	-0.732	-3.075
65.0		-0.120	-1.401	-1.270	-1.400	-4.067
78.5		-0.147	-3.011	-4.100	-3.305	-4.934
79.5		-84.001	-80.021	70.003	-82.015	-34.403
80.5		-0.323	-0.306	-7.001	-12.020	-0.350
81.5		-3.105	-2.001	-3.050	-5.013	-0.005
82.0		0.034	-2.200	1.707	-3.507	-5.034
84.0		-4.323	-4.150	-4.300	-4.014	-5.047
87.0		-0.402	-3.007	-1.015	-2.704	-3.300
88.0		-0.040	-1.711	-5.440	-2.500	-2.040
93.0		-0.772	-1.551	-0.940	-3.201	-0.000
96.0		-0.050	-1.350	-0.150	-0.033	-4.107
100.0		-0.907	-0.000	-0.005	-1.027	-1.350
2.5	(LOWER)	0.429	0.070	0.003	-0.110	-0.041
5.0		0.700	0.743	0.470	0.350	0.203
10.0		0.794	0.503	0.575	0.507	0.304
24.0		0.541	0.61[illegible]	0.503	0.417	0.270
33.0		0.543	0.522	0.503	0.400	-0.061
54.0		0.450	0.452	0.446	-0.707	-2.313
73.5		-1.170	0.612	0.500	0.021	0.077
84.0		0.611	0.763	-0.060	0.007	0.134
96.[illegible]		0.002	0.610	0.507	0.400	-0.045

WING PRESSURE COEFFICIENTS

RUN 238 POINT 2 ALPHA -0.01 PSI 0.00 HEIGHT 05.70

X/C. %		BP 2	BP 6	BP 12	BP 16	BP 22
0.0	(UPPER)	0.315	-0.005	-0.536	-1.122	-1.410
2.5		-0.54[illegible]	-0.000	-0.872	-1.212	-1.500
5.0		-0.501	-0.040	-0.913	-0.040	-0.955
10.0		-0.550	-0.501	-0.005	-0.050	-1.156
15.0		-0.557	-0.740	-0.000	-0.003	-0.733
24.0		-0.050	-0.725	-0.020	-1.050	-0.012
33.0		-0.532	-0.601	-0.701	-0.[illegible]	-0.001
54.0		-1.005	-0.006	-1.049	-1.2[illegible]0	-1.078
65.0		-0.200	-1.415	-1.507	-1.502	-1.332
78.5		-0.333	-4.115	-4.010	-4.501	-4.502
79.5		-150.277	-137.703	-123.171	-104.301	-00.023
80.5		-8.503	-8.134	-10.774	-20.435	-0.202
81.5		-3.200	-8.017	-3.300	-5.775	-8.004
82.0		3.250	-1.303	8.000	-3.270	-2.903
84.0		-6.225	-4.030	-5.102	-3.025	-1.722
87.0		0.107	-4.018	-0.010	-2.312	0.030
88.0		-0.007	-1.000	-7.702	-2.107	0.000
93.0		-0.070	-1.714	-0.130	-3.000	-0.107
96.0		-1.240	-1.522	0.074	0.172	-3.000
100.0		-2.301	-2.202	-2.171	-2.115	-1.070
2.5	(LOWER)	0.100	0.225	0.271	0.125	0.300
5.0		0.175	0.105	0.100	0.150	0.175
10.0		0.210	0.240	0.127	0.102	-0.055
24.0		-0.014	0.025	0.054	-0.120	-0.033
33.0		0.020	0.050	0.020	0.000	-0.103
54.0		0.171	0.000	0.155	-1.490	-3.000
73.5		-2.010	0.330	0.303	-0.501	0.150
84.0		0.300	0.525	-0.155	0.510	0.202
96.0		0.501	0.290	0.323	0.107	-0.050

RUN 238 POINT 4 ALPHA 4.00 PSI 0.00 HEIGHT 07.01

X/C. %		BP 2	BP 6	BP 12	BP 16	BP 22
0.0	(UPPER)	-0.505	-1.543	-2.020	-3.040	-3.210
2.5		-1.104	-1.173	-1.504	-2.105	-2.050
5.0		-0.030	-1.101	-1.454	-1.521	-2.207
10.0		-0.020	-0.007	-1.001	-1.430	-2.213
15.0		-0.757	-1.004	-0.025	-1.200	-1.330
24.0		-0.021	-0.030	-0.002	-1.305	-1.102
33.0		-0.702	-0.041	-0.002	-1.101	-1.110
54.0		-1.023	-1.010	-1.221	-1.241	-1.330
65.0		-0.302	-1.550	-1.750	-1.702	-1.000
78.5		-0.304	-4.332	-4.003	-4.025	-5.140
79.5		-153.021	-141.201	-127.133	-107.514	-02.035
80.5		-8.740	-8.370	-11.177	-21.173	-0.411
81.5		-3.410	-8.000	-3.025	-6.210	-8.720
82.0		3.300	-1.300	8.075	-3.020	-3.590
84.0		-6.372	-5.101	-5.243	-4.273	-2.201
87.0		0.143	-5.050	-0.071	-2.533	-0.300
88.0		-0.701	-1.774	-0.002	-2.310	-0.340
93.0		-0.755	-1.021	-0.231	-3.031	-0.100
96.0		-1.347	-1.000	0.505	0.010	-3.053
100.0		-2.372	-2.217	-2.107	-2.101	-2.000
2.5	(LOWER)	0.370	0.410	0.425	0.220	0.300
5.0		0.304	0.319	0.401	0.300	0.200
10.0		0.300	0.421	0.273	0.342	0.044
24.0		0.050	0.120	0.130	-0.052	0.005
33.0		0.000	0.120	0.090	0.121	-0.100
54.0		0.200	0.004	0.160	-1.505	-3.994
73.5		-2.040	0.349	0.302	-0.537	0.052
84.0		0.397	0.560	0.104	0.523	0.210
96.0		0.555	0.310	0.341	0.177	-0.144

WING PRESSURE COEFFICIENTS

RUN 230 POINT 8 ALPHA 8.01 PSI 0.00 HEIGHT 80.75

X/C, %		DP 2	DP 6	DP 12	DP 16	DP 22
0.0	(UPPER)	-2.109	-3.986	-3.847	-3.812	-2.340
2.5		-1.500	-2.276	-2.763	-3.220	-2.126
5.0		-1.384	-1.613	-2.515	-3.237	-1.874
10.0		-1.127	-1.301	-1.787	-3.470	-2.270
15.0		-1.017	-1.208	-1.302	-2.733	-1.848
24.0		-1.046	-1.005	-1.087	-1.452	-2.021
33.0		-0.825	-0.983	-1.080	-1.043	-1.828
54.0		-1.574	-1.104	-1.354	-1.225	-2.067
65.0		-0.308	-1.050	-1.085	-1.773	-2.274
78.5		-[illegible].361	-4.308	-4.083	-4.875	-5.826
79.5		-190.285	-143.068	-126.054	-100.402	-83.290
80.5		-8.878	-8.495	-10.951	-21.486	-0.446
81.5		-3.403	-8.700	-3.712	-8.361	-11.043
82.0		3.375	-1.364	5.005	-3.700	-4.987
84.0		-6.264	-9.230	-5.208	-4.408	-3.720
87.0		0.213	-5.104	-0.712	-2.703	-1.880
88.0		-0.861	-1.774	-8.075	-2.415	-1.713
93.0		-0.721	-1.874	-0.220	-4.053	-0.112
96.0		-1.315	-1.880	0.553	-0.635	-4.880
100.0		-2.306	-2.174	-2.115	-2.170	-2.120
2.5	(LOWER)	0.529	0.514	0.432	0.263	0.254
5.0		0.420	0.478	0.400	0.376	0.255
10.0		0.541	0.572	0.379	0.455	0.096
24.0		0.172	0.256	0.230	0.025	0.030
33.0		0.223	0.217	0.181	0.186	-0.100
54.0		0.206	0.195	0.216	-1.630	-4.083
73.5		-2.705	0.285	0.401	-0.547	-0.026
84.0		0.473	0.500	-0.140	0.527	0.142
96.0		0.617	0.352	0.300	0.185	-0.295

WING PRESSURE COEFFICIENTS

RUN 230 POINT 13 ALPHA 21.95 PSI 0.00 HEIGHT 99.02

X/C, %		DP 2	DP 6	DP 12	DP 16	DP 22
0.0	(UPPER)	-14.222	-8.082	-5.078	-4.448	-3.220
2.5		-5.501	-10.783	-5.402	-4.220	-3.137
5.0		-3.730	-11.463	-5.780	-4.410	-2.980
10.0		-2.712	-3.110	-7.056	-4.734	-3.041
15.0		-2.214	-1.825	-7.500	-5.230	-3.200
24.0		-1.052	-1.051	-4.575	-6.081	-3.060
33.0		-1.482	-1.402	-1.827	-5.772	-3.475
54.0		-1.020	-1.582	-1.174	-1.526	-4.701
65.0		-0.418	-1.945	-1.790	-1.093	-5.017
78.5		-0.482	-5.040	-5.638	-4.507	-6.432
79.5		-108.345	-155.217	-143.633	-117.344	-86.020
80.5		-9.263	-8.512	-12.378	-23.184	-0.630
81.5		-3.083	-9.062	-4.815	-7.116	-13.234
82.0		3.530	-1.811	6.647	-4.343	-7.104
84.0		-5.527	-6.138	-6.075	-5.444	-6.218
87.0		0.362	-5.903	-1.300	-3.461	-3.502
88.0		-0.600	-2.218	-8.318	-3.082	-3.680
93.0		-0.705	-2.313	-0.872	-4.885	-0.180
96.0		-1.327	-2.024	0.204	-0.484	-5.803
100.0		-2.123	-2.044	-2.143	-2.230	-2.240
2.5	(LOWER)	0.285	-0.054	-0.104	-0.480	-0.187
5.0		0.088	0.770	0.460	0.208	0.087
10.0		0.940	0.827	0.534	0.578	0.130
24.0		0.442	0.561	0.501	0.188	0.196
33.0		0.503	0.487	0.384	0.385	-0.219
54.0		0.475	0.327	0.368	-2.003	-4.784
73.5		-3.280	0.430	0.417	-0.371	-0.144
84.0		0.501	0.053	-0.218	0.525	0.063
96.0		0.804	0.480	0.463	0.195	-0.283

RUN 230 POINT 8 ALPHA 12.00 PSI 0.00 HEIGHT 80.83

X/C, %		DP 2	DP 6	DP 12	DP 16	DP 22
0.0	(UPPER)	-4.801	-5.288	-3.867	-3.377	-2.710
2.5		-2.567	-5.138	-3.874	-2.900	-2.601
5.0		-1.848	-5.056	-3.020	-3.000	-2.300
10.0		-1.550	-0.982	-4.142	-3.375	-2.843
15.0		-1.288	-1.247	-4.101	-3.606	-2.402
24.0		-1.291	-1.252	-1.795	-4.011	-2.750
33.0		-1.126	-1.132	-0.788	-3.191	-2.053
54.0		-1.755	-1.306	-1.235	-1.347	-3.064
65.0		-0.350	-1.708	-1.844	-1.337	-4.287
78.5		-0.420	-4.782	-5.290	-4.820	-6.717
79.5		-102.051	-150.007	-137.875	-114.040	-86.195
80.5		-8.232	-8.002	-11.750	-22.236	-0.495
81.5		-3.003	-8.107	-4.142	-8.506	-13.405
82.0		3.449	-1.818	6.050	-3.779	-7.334
84.0		-6.582	-5.752	-5.034	-4.678	-6.104
87.0		0.226	-5.507	-0.951	-2.824	-3.448
88.0		-0.688	-2.004	-8.714	-2.538	-2.810
93.0		-0.727	-2.031	-0.300	-4.209	-0.136
96.0		-1.302	-1.783	0.401	-0.110	-5.337
100.0		-2.256	-2.203	-2.201	-2.238	-2.373
2.5	(LOWER)	0.577	0.470	0.358	0.084	0.218
5.0		0.548	0.505	0.540	0.304	0.257
10.0		0.600	0.054	0.449	0.513	0.133
24.0		0.245	0.338	0.319	0.050	0.004
33.0		0.200	0.200	0.230	0.233	-0.101
54.0		0.333	0.100	0.254	-1.822	-4.432
73.5		-2.534	0.384	0.300	-0.550	-0.008
84.0		0.472	0.810	-0.182	0.533	0.063
96.0		0.683	0.385	0.301	0.170	-0.255

RUN 230 POINT 2 ALPHA -0.01 PSI 0.00 HEIGHT 80.72

X/C, %		DP 2	DP 6	DP 12	DP 16	DP 22
0.0	(UPPER)	0.290	-0.185	-0.842	-2.030	-2.087
2.5		-0.804	-0.737	-0.827	-1.485	-2.081
5.0		-0.878	-0.086	-1.284	-0.841	-0.950
10.0		-0.050	-0.573	-0.824	-1.362	-1.532
15.0		-0.081	-1.207	-0.562	-1.319	-0.755
24.0		-1.181	-1.077	-0.710	-1.846	-1.412
33.0		-1.010	-0.992	-0.912	-1.290	-1.380
54.0		-2.074	-2.682	-1.510	-3.437	-1.480
65.0		-0.745	-1.076	-2.316	-2.104	-1.484
78.5		-0.015	-5.860	-6.812	-5.905	-6.015
79.5		-313.432	-281.950	-241.744	-212.207	-122.922
80.5		-15.113	-14.441	-20.190	-39.451	-1.030
81.5		-4.070	-10.020	-3.761	-8.750	-17.702
82.0		0.266	0.455	17.512	-3.042	-3.040
84.0		-10.050	-8.062	-7.039	-6.193	-0.775
87.0		1.906	-0.032	0.735	-2.018	2.732
88.0		0.081	-2.208	-14.563	-2.445	2.330
93.0		-0.950	-2.795	0.873	-0.513	-0.230
96.0		-2.028	-2.380	2.030	1.348	-4.520
100.0		-5.014	-4.714	-4.619	-4.550	-3.004
2.5	(LOWER)	-0.002	0.100	0.114	-0.341	0.204
5.0		-0.001	0.250	0.137	-0.133	-0.115
10.0		0.381	0.331	-0.090	0.186	-0.495
24.0		-0.267	-0.054	-0.148	-0.057	-3.225
33.0		-0.080	-0.126	-0.242	-0.181	-0.390
54.0		0.070	-0.288	-0.104	-4.370	-10.068
73.5		-7.486	-0.002	0.048	-1.339	-0.220
84.0		0.142	0.317	-0.393	0.358	0.111
96.0		0.096	0.003	0.098	-0.287	-0.463

WING PRESSURE COEFFICIENTS

RUN 230 POINT 4 ALPHA 4.00 PSI 0.00 HEIGHT 80.22

X/C, %		SP 2	SP 6	SP 12	SP 16	SP 22
0.0	(UPPER)	-0.727	-1.983	-3.330	-4.001	-3.222
2.5		-1.527	-1.296	-1.733	-3.223	-2.827
5.0		-1.348	-1.209	-1.809	-1.786	-1.960
10.0		-1.110	-0.881	-1.210	-1.833	-2.913
15.0		-1.109	-1.520	-0.940	-1.082	-1.701
24.0		-1.345	-1.240	-0.880	-2.147	-1.951
33.0		-1.390	-1.263	-1.120	-1.982	-1.707
54.0		-2.130	-2.256	-1.713	-2.001	-1.750
65.0		-0.801	-2.151	-2.488	-2.402	-1.775
78.5		-0.840	-0.120	-0.920	-0.355	-0.616
79.5		-317.081	-207.080	-248.703	-210.477	-125.137
80.5		-15.283	-14.757	-20.131	-40.123	-1.153
81.5		-4.900	-10.205	-4.042	-8.202	-18.707
82.0		8.047	0.225	17.405	-3.927	-3.844
84.0		-11.218	-0.178	-7.208	-0.580	-1.260
87.0		1.703	-0.070	0.560	-3.357	2.370
88.0		-0.050	-2.221	-14.872	-2.677	1.856
93.0		-0.845	-2.823	0.750	-0.774	-0.280
98.0		-2.134	-2.563	1.929	1.184	-5.224
100.0		-4.061	-4.770	-4.831	-4.525	-4.100
2.5	(LOWER)	0.220	0.326	0.225	-0.201	0.250
5.0		0.075	0.295	0.314	0.002	-0.017
10.0		0.505	0.488	0.303	0.204	-0.372
24.0		-0.194	-0.010	-0.038	-0.581	-0.223
33.0		0.006	-0.053	-0.161	-0.150	-0.424
54.0		0.115	-0.255	-0.124	-3.043	-0.730
73.5		-7.078	-0.070	0.001	-1.041	-0.325
84.0		0.115	0.251	-0.411	0.342	-0.023
98.0		0.714	0.015	0.106	-0.301	-0.582

WING PRESSURE COEFFICIENTS

RUN 230 POINT 8 ALPHA 12.00 PSI 0.00 HEIGHT 85.90

X/C, %		SP 2	SP 6	SP 12	SP 16	SP 22
0.0	(UPPER)	-4.838	-5.406	-3.807	-4.049	-3.247
2.5		-2.066	-5.080	-3.666	-3.077	-2.878
5.0		-2.253	-6.290	-4.263	-3.633	-2.422
10.0		-1.708	-0.866	-4.201	-3.753	-3.516
15.0		-1.611	-1.886	-4.350	-4.005	-2.482
24.0		-1.096	-1.557	-1.871	-4.749	-3.263
33.0		-1.471	-1.372	-0.901	-3.050	-3.300
54.0		-2.743	-1.004	-1.619	-2.210	-4.526
65.0		-0.770	-2.263	-2.444	-1.705	-4.500
78.5		-0.847	-6.434	-7.004	-5.058	-7.861
79.5		-323.871	-206.271	-250.300	-220.906	-125.526
80.5		-15.303	-15.074	-20.032	-40.242	-1.409
81.5		-5.224	-10.047	-4.027	-8.241	-20.001
82.0		8.130	-0.020	17.418	-4.000	-7.470
84.0		-11.179	-0.587	-7.424	-0.872	-5.445
87.0		2.022	-0.298	0.355	-3.492	-1.050
88.0		0.083	-2.567	-15.261	-2.700	-1.582
93.0		-0.400	-3.077	0.506	-0.936	-0.237
98.0		-2.010	-2.718	1.903	1.100	-7.605
100.0		-4.714	-4.508	-4.421	-4.508	-4.306
2.5	(LOWER)	0.416	0.419	0.155	-0.354	0.001
5.0		0.308	0.098	0.472	0.003	0.013
10.0		0.809	0.740	0.303	0.482	-0.240
24.0		0.049	0.251	0.154	-0.380	-0.075
33.0		0.207	0.167	0.012	0.041	-0.394
54.0		0.204	-0.113	0.002	-3.054	-0.678
73.5		-0.730	-0.003	0.090	-0.034	-0.408
84.0		0.210	0.309	-0.413	0.367	-0.178
98.0		0.831	0.110	0.184	-0.240	-0.083

RUN 230 POINT 8 ALPHA 8.00 PSI 0.00 HEIGHT 88.05

X/C, %		SP 2	SP 6	SP 12	SP 16	SP 22
0.0	(UPPER)	-3.302	-3.875	-3.005	-3.060	-2.734
2.5		-1.705	-3.151	-2.913	-2.763	-2.371
5.0		-1.882	-1.702	-3.544	-2.050	-1.770
10.0		-1.352	-1.037	-2.783	-3.210	-2.772
15.0		-1.301	-1.550	-1.005	-3.223	-1.704
24.0		-1.430	-1.304	-0.951	-3.188	-2.390
33.0		-1.255	-1.230	-1.032	-1.770	-2.314
54.0		-2.750	-1.020	-1.029	-2.300	-2.202
65.0		-0.704	-2.103	-2.383	-2.106	-2.313
78.5		-0.847	-5.041	-6.045	-5.082	-6.047
79.5		-300.007	-201.804	-240.956	-211.130	-121.344
80.5		-14.478	-14.187	-18.870	-38.548	-1.204
81.5		-4.720	-10.232	-3.008	-8.003	-17.504
82.0		3.750	0.100	16.706	-3.775	-5.209
84.0		-10.730	-0.070	-6.932	-6.463	-2.800
87.0		1.744	-0.730	0.606	-3.204	0.525
88.0		-0.016	-2.150	-14.331	-2.404	0.230
93.0		-0.500	-2.053	0.710	-0.497	-0.183
98.0		-2.058	-2.526	1.918	1.148	-6.524
100.0		-4.588	-4.201	-4.251	-4.350	-3.888
2.5	(LOWER)	0.394	0.462	0.316	-0.191	0.255
5.0		0.272	0.571	0.456	0.120	0.000
10.0		0.000	0.600	0.241	0.453	-0.246
24.0		-0.013	0.172	0.002	-0.423	-0.118
33.0		0.141	0.112	-0.020	-0.034	-0.355
54.0		0.242	-0.700	0.053	-3.529	-0.185
73.5		-0.531	0.024	0.120	-0.051	-0.340
84.0		0.240	0.283	-0.332	0.189	-0.068
98.0		0.770	0.114	0.190	-0.206	-0.550

RUN 230 POINT 13 ALPHA 21.00 PSI 0.00 HEIGHT 90.00

X/C, %		SP 2	SP 6	SP 12	SP 16	SP 22
0.0	(UPPER)	-14.267	-0.201	-5.020	-5.240	-3.050
2.5		-5.056	-11.405	-5.722	-4.011	-3.072
5.0		-4.000	-12.781	-8.429	-4.780	-3.212
10.0		-2.924	-2.537	-8.429	-5.344	-4.420
15.0		-2.475	-2.144	-8.777	-6.170	-2.820
24.0		-2.215	-1.924	-3.002	-8.022	-4.240
33.0		-1.002	-1.805	-1.427	-6.170	-4.110
54.0		-2.383	-1.747	-1.582	-1.030	-6.020
65.0		-0.838	-2.424	-2.415	-1.787	-6.000
78.5		-1.000	-6.573	-7.344	-5.030	-8.052
79.5		-294.003	-206.780	-231.325	-200.474	-117.201
80.5		-14.790	-15.333	-21.205	-38.000	-1.442
81.5		-4.887	-10.145	-5.166	-8.077	-20.000
82.0		8.170	-0.606	15.300	-4.020	-9.150
84.0		-10.263	-0.880	-7.321	-7.503	-7.583
87.0		2.071	-0.454	-0.870	-4.353	-3.350
88.0		0.147	-2.741	-14.888	-3.374	-2.982
93.0		-0.421	-3.321	0.057	-7.210	-0.324
98.0		-1.742	-2.982	1.270	0.300	-6.070
100.0		-4.081	-3.960	-4.000	-4.005	-3.060
2.5	(LOWER)	0.238	-0.185	-0.400	-0.929	-0.435
5.0		0.546	0.806	0.341	-0.078	-0.183
10.0		1.040	0.841	0.411	0.512	-0.223
24.0		0.244	0.440	0.330	-0.244	0.012
33.0		0.441	0.367	0.101	0.107	-0.455
54.0		0.423	0.057	0.143	-3.330	-0.240
73.5		-0.305	0.082	0.112	-0.087	-0.400
84.0		0.257	0.441	-0.464	0.255	-0.235
98.0		0.911	0.230	0.297	-0.183	-0.004

WING PRESSURE COEFFICIENTS

RUN 240 POINT 2 ALPHA -0.02 PSI 0.00 HEIGHT 80.00

X/C, %		BP 2	BP 6	BP 12	BP 16	BP 22
0.0	(UPPER)	0.386	-0.330	-0.987	-2.990	-2.640
2.5		-0.943	-0.733	-0.718	-1.486	-2.475
5.0		-1.438	-1.075	-1.539	-0.807	-0.834
10.0		-1.187	-0.547	-0.851	-1.712	-2.832
15.0		-1.175	-1.040	-0.410	-1.730	-0.673
24.0		-1.846	-1.400	-0.723	-2.808	-1.977
33.0		-1.504	-1.400	-0.922	-1.775	-2.032
54.0		-4.263	-2.331	-2.042	-2.482	-1.777
65.0		-1.394	-2.586	-3.054	-2.731	-1.433
78.5		-1.857	-7.775	-8.783	-7.377	-7.312
79.5		-574.000	-514.072	-435.158	-384.787	-219.507
80.5		-24.587	-23.420	-32.809	-67.870	-2.768
81.5		-6.717	-33.681	-3.381	-12.057	-26.319
82.0		18.826	3.851	35.188	-3.174	-3.203
84.0		-18.072	-14.913	-9.232	-9.478	1.044
87.0		4.848	-15.116	3.110	-3.808	7.188
88.0		1.573	-2.830	-24.411	-2.351	6.339
93.0		0.032	-4.022	2.921	-10.381	-0.363
96.0		-2.875	-3.504	4.606	5.638	-6.486
100.0		-8.884	-8.403	-8.225	-8.087	-8.841
2.5	(LOWER)	-0.296	0.087	-0.217	-1.919	0.005
5.0		-0.529	0.410	-0.001	-0.561	-0.511
10.0		0.552	0.481	-0.312	0.688	-1.064
24.0		-0.838	-0.221	-0.413	-1.383	-0.470
33.0		-0.188	-0.287	-0.595	-0.581	-0.585
54.0		0.054	-0.832	-0.522	-5.944	-17.084
73.5		-11.064	-0.822	-0.526	-0.988	-0.782
84.0		-0.242	-0.058	-0.831	0.112	-0.188
96.0		0.848	-0.460	-0.255	-0.962	-1.026

RUN 240 POINT 4 ALPHA 4.01 PSI 0.00 HEIGHT 80.00

X/C, %		BP 2	BP 6	BP 12	BP 16	BP 22
0.0	(UPPER)	-0.884	-1.825	-3.450	-5.466	-3.883
2.5		-1.884	-1.316	-1.779	-3.412	-2.875
5.0		-1.736	-1.438	-1.949	-1.853	-1.825
10.0		-1.414	-0.738	-1.237	-2.229	-3.901
15.0		-1.330	-1.875	-0.783	-2.105	-1.543
24.0		-1.929	-1.710	-0.941	-3.050	-2.486
33.0		-1.884	-1.509	-1.149	-2.083	-2.258
54.0		-3.582	-1.820	-2.287	-1.818	-2.008
65.0		-1.381	-2.095	-3.213	-2.914	-1.767
78.5		-1.888	-8.022	-9.087	-7.768	-7.920
79.5		-577.785	-519.052	441.381	-388.072	-221.881
80.5		-24.826	-23.006	-32.828	-66.471	-2.881
81.5		-7.907	-33.435	-3.880	-13.181	-27.290
82.0		18.428	3.423	35.248	-3.382	-3.851
84.0		-18.384	-15.308	-9.464	-9.717	0.460
87.0		4.929	-15.293	2.754	-4.288	8.809
88.0		1.408	-2.701	-24.768	-2.829	5.970
93.0		-0.083	-4.188	2.754	-10.852	-0.464
96.0		-2.988	-3.710	4.541	3.492	-7.080
100.0		-8.732	-8.428	-8.152	-8.051	-8.083
2.5	(LOWER)	0.053	0.271	-0.017	-0.883	0.081
5.0		-0.124	0.000	0.263	-0.356	-0.383
10.0		0.789	0.845	-0.146	0.261	-0.941
24.0		-0.488	-0.045	-0.304	-1.295	-0.434
33.0		-0.025	-0.212	-0.407	-0.512	-0.501
54.0		0.184	-0.736	-0.474	-5.253	-18.006
73.5		-11.248	-0.786	-0.580	-0.806	-0.900
84.0		-0.184	-0.014	-0.638	0.138	-0.270
96.0		0.902	-0.475	-0.193	-0.968	-1.124

WING PRESSURE COEFFICIENTS

RUN 240 POINT 6 ALPHA 8.00 PSI 0.00 HEIGHT 80.07

X/C, %		BP 2	BP 6	BP 12	BP 16	BP 22
0.0	(UPPER)	-2.318	-4.038	-3.732	-4.972	-3.492
2.5		-2.964	-3.396	-2.672	-2.852	-2.838
5.0		-2.225	-2.503	-3.782	-2.613	-1.144
10.0		-1.885	-1.170	-3.218	-3.604	-3.868
15.0		-1.575	-2.189	-2.068	-3.677	-1.824
24.0		-2.080	-1.874	-0.847	-4.414	-3.100
33.0		-1.817	-1.847	-1.079	-2.875	-3.079
54.0		-3.318	-1.780	-2.280	-1.848	-2.704
65.0		-1.431	-2.847	-3.270	-2.738	-2.417
78.5		-1.368	-8.145	-9.174	-7.428	-8.584
79.5		-579.217	-521.319	-443.927	-388.855	-222.333
80.5		-24.819	-23.877	-33.043	-68.094	-2.904
81.5		-8.906	-33.408	-4.084	-13.210	-28.957
82.0		18.888	3.386	35.210	-3.300	-5.301
84.0		-18.275	-15.881	-9.830	-9.630	-1.148
87.0		4.722	-15.886	2.614	-4.388	5.319
88.0		1.332	-2.701	-24.804	-2.614	4.509
93.0		-0.053	-4.357	2.681	-10.888	-0.545
96.0		-3.155	-3.884	4.425	3.365	-6.775
100.0		-8.538	-8.304	-8.029	-8.058	-8.920
2.5	(LOWER)	0.188	0.342	-0.031	-0.910	-0.021
5.0		0.133	0.824	0.228	-0.335	-0.381
10.0		0.911	0.741	-0.055	0.328	-0.825
24.0		-0.424	-0.030	-0.178	-1.199	-0.436
33.0		0.050	-0.186	-0.4[illegible]4	-0.460	-0.823
54.0		0.210	-0.749	-0.454	-5.033	-18.471
73.5		-11.101	-0.794	-0.588	-0.556	-1.091
84.0		-0.144	-0.023	-0.683	0.078	-0.394
96.0		0.914	-0.407	-0.187	-0.984	-1.225

RUN 240 POINT 8 ALPHA 11.98 PSI 0.00 HEIGHT 85.00

X/C, %		BP 2	BP 6	BP 12	BP 16	BP 22
0.0	(UPPER)	-4.738	-5.467	-3.975	-4.994	-3.875
2.5		-3.245	-4.791	-3.278	-3.170	-3.387
5.0		-2.880	-8.754	-4.517	-2.956	-2.355
10.0		-2.102	-0.844	-4.320	-4.107	-4.314
15.0		-1.887	-2.152	-4.211	-4.927	-2.564
24.0		-2.330	-1.942	-1.723	-5.788	-3.858
33.0		-2.037	-1.742	-0.922	-4.188	-4.114
54.0		-2.878	-1.944	-2.184	-1.422	-4.708
65.0		-1.458	-2.817	-3.210	-2.528	-4.427
78.5		-1.704	-8.440	-9.370	-7.167	-8.882
79.5		-579.787	-523.275	-445.739	-389.290	-220.232
80.5		-24.935	-24.130	-33.275	-68.225	-3.122
81.5		-7.145	-33.239	-4.780	-13.312	-29.985
82.0		18.588	2.875	34.797	-3.438	-8.826
84.0		-18.500	-15.783	-9.838	-10.014	-3.033
87.0		4.970	-15.983	2.194	-4.351	2.779
88.0		1.473	-3.083	-25.101	-2.687	1.660
93.0		-0.050	-4.478	2.494	-10.848	-0.707
96.0		-3.123	-3.949	4.387	3.293	-11.378
100.0		-8.333	-8.152	-7.870	-7.864	-7.174
2.5	(LOWER)	0.114	0.291	-0.130	-1.034	-0.122
5.0		0.213	0.786	0.383	-0.329	-0.362
10.0		1.076	0.836	0.032	0.418	-0.887
24.0		-0.299	0.082	-0.141	-1.109	-0.344
33.0		0.218	-0.065	-0.367	-0.403	-0.609
54.0		0.320	-0.698	-0.410	-4.754	-18.290
73.5		-10.787	-0.741	-0.609	-0.454	-1.135
84.0		-0.131	0.018	-0.698	0.092	-0.475
96.0		1.024	-0.317	-0.125	-0.946	-1.314

WING PRESSURE COEFFICIENTS

RUN 240 POINT 12 ALPHA 21.00 PSI 0.00 HEIGHT 00.14

X/C. %		DP 2	DP 6	DP 12	DP 16	DP 22
0.0	UPPER	-13.333	-8.896	-5.726	-5.220	-4.930
2.5		-5.378	-10.446	-5.443	-4.888	-4.122
5.0		-4.158	-13.442	-8.074	-4.725	-3.213
10.0		-3.030	-3.298	-8.588	-5.735	-5.332
15.0		-2.571	-2.588	-8.578	-6.820	-3.740
24.0		-2.734	-2.272	-3.250	-10.043	-4.800
33.0		-2.378	-1.070	-1.181	-6.442	-4.963
54.0		-2.722	-1.702	-2.183	-1.300	-7.950
65.0		-1.988	-3.000	-3.127	-2.150	-7.478
78.5		-1.700	-6.049	-6.500	-7.210	-11.630
79.5		-500.377	-527.013	-451.301	-302.333	-224.435
80.5		-24.120	-24.020	-33.507	-08.033	-3.347
81.5		-6.404	-22.013	-5.001	-13.804	-35.341
82.0		10.435	2.587	24.403	-4.100	-12.823
84.0		-17.341	-16.797	-10.152	-10.010	-9.717
87.0		5.043	-16.246	1.030	-4.711	-2.200
89.0		2.063	-3.000	-35.442	-2.072	-1.830
93.0		0.831	-4.051	3.290	-11.000	-0.786
96.0		-2.162	-4.446	4.190	3.150	-12.123
100.0		-7.020	-7.720	-7.082	-7.740	-7.150
2.5	LOWER	0.002	-3.202	-9.710	-1.017	-0.061
5.0		0.250	0.073	0.210	-0.543	-0.600
10.0		1.270	0.753	0.111	0.405	-0.874
24.0		-0.110	0.200	0.070	-0.000	-0.271
33.0		0.302	0.177	-0.207	-0.200	-0.077
54.0		0.478	-0.527	-0.304	-4.023	-10.240
73.5		-10.504	-0.750	-0.552	-0.451	-1.300
84.0		-0.124	0.000	-0.700	0.075	-0.614
96.0		1.120	-0.207	-0.044	-0.000	-1.312

RUN 243 POINT 5 ALPHA 4.02 PSI 0.00 HEIGHT 05.03

X/C. %		DP 2	DP 6	DP 12	DP 16	DP 22
0.0	UPPER	0.370	0.400	0.104	-0.210	-0.064
2.5		0.124	-0.040	-0.456	-0.730	-0.077
5.0		0.000	-0.004	-0.257	-0.605	-0.720
10.0		-0.048	-0.174	-0.243	-0.450	-0.563
15.0		-0.087	-0.186	-0.341	-0.363	-0.481
24.0		-0.124	-0.212	-0.300	-0.305	-0.345
33.0		-0.171	-0.223	-0.204	-0.301	-0.290
54.0		-0.050	-0.042	-0.310	0.083	-0.200
65.0		0.075	-0.330	-0.379	-0.300	-0.300
78.5		0.000	-0.583	-0.507	-0.620	-0.700
79.5		-0.582	-0.624	-0.614	-0.640	-0.641
80.5		-0.550	-0.527	-0.587	-0.587	0.032
81.5		-0.571	0.000	-0.610	-0.050	-0.703
82.0		-0.507	-0.503	-0.633	-0.624	-0.863
84.0		-0.500	-0.570	-0.745	-0.620	-0.022
87.0		-0.500	-0.561	-0.616	-0.633	-0.916
89.0		-0.521	-0.516	-0.563	-0.597	-0.837
93.0		-0.521	-0.526	-0.579	-0.590	0.055
96.0		-0.533	-0.564	-0.571	-0.630	-0.917
100.0		-0.300	-0.433	-0.481	-0.535	-0.774
2.5	LOWER	-0.140	-0.075	0.180	0.330	0.363
5.0		-0.002	-0.014	0.137	0.230	0.263
10.0		-0.047	-0.040	0.103	0.147	0.177
24.0		0.025	0.000	0.071	0.100	0.061
33.0		0.000	0.050	0.094	0.123	0.056
54.0		0.140	0.157	0.194	0.235	0.430
73.5		0.002	0.402	0.527	0.617	0.440
84.0		0.475	0.501	0.054	0.000	0.534
96.0		0.210	0.200	0.254	0.260	0.140

RUN 243 POINT 3 ALPHA 0.01 PSI 0.00 HEIGHT 00.00

X/C. %		DP 2	DP 6	DP 12	DP 16	DP 22
0.0	UPPER	0.120	0.003	0.304	0.500	0.470
2.5		0.253	0.101	-0.054	-0.200	-0.211
5.0		0.100	0.114	-0.000	-0.210	-0.200
10.0		0.074	-0.004	-0.130	-0.221	-0.230
15.0		0.030	-0.012	-0.181	-0.210	-0.270
24.0		-0.015	-0.002	-0.194	-0.170	-0.212
33.0		-0.070	-0.117	-0.194	-0.215	-0.214
54.0		0.017	-0.022	-0.252	0.781	-0.220
65.0		0.075	-0.270	-0.329	-0.333	-0.330
78.5		0.070	-0.541	-0.555	-0.502	-0.781
79.5		-0.500	-0.000	-0.500	-0.615	-0.040
80.5		-0.529	-0.495	-0.530	-0.540	0.030
81.5		-0.500	0.000	-0.504	-0.000	-0.700
82.0		-0.472	-0.553	-0.002	-0.500	-0.004
84.0		-0.537	-0.541	-0.005	-0.505	-0.027
87.0		-0.510	-0.522	-0.571	-0.570	-0.000
89.0		-0.479	-0.400	-0.511	-0.542	-0.000
93.0		-0.404	-0.472	-0.512	-0.529	0.042
96.0		-0.471	-0.507	-0.402	-0.551	0.050
100.0		-0.349	-0.403	-0.435	-0.403	-0.047
2.5	LOWER	-0.347	-0.303	-0.145	0.023	0.034
5.0		-0.220	-0.160	-0.110	-0.002	0.007
10.0		-0.100	-0.257	-0.001	-0.033	0.000
24.0		-0.000	-0.001	-0.020	0.011	-0.015
33.0		-0.055	-0.010	-0.020	0.047	0.050
54.0		0.105	0.110	0.102	0.200	0.467
73.5		0.700	0.430	0.494	0.000	0.470
84.0		0.424	0.540	0.051	0.047	0.530
96.0		0.180	0.251	0.256	0.273	0.195

RUN 243 POINT 7 ALPHA 7.00 PSI 0.00 HEIGHT 04.07

X/C. %		DP 2	DP 6	DP 12	DP 16	DP 22
0.0	UPPER	0.501	0.155	-1.030	-2.105	-2.715
2.5		-0.156	-0.437	-0.873	-1.400	-2.320
5.0		-0.164	-0.304	-0.700	-1.044	-1.070
10.0		-0.235	-0.407	-0.613	-0.787	-1.045
15.0		-0.250	-0.382	-0.551	-0.050	-0.727
24.0		-0.264	-0.350	-0.400	-0.500	-0.522
33.0		-0.295	-0.361	-0.417	-0.400	-0.444
54.0		-0.150	-0.100	-0.430	0.503	-0.407
65.0		0.055	-0.501	-0.543	-0.550	-0.020
78.5		0.001	-1.007	-1.025	-1.050	-1.371
79.5		-1.173	-1.100	-1.133	-1.179	-1.611
80.5		-1.150	-1.022	-0.900	-1.027	0.021
81.5		-1.125	0.016	-0.077	1.041	-1.500
82.0		-0.907	-1.010	-0.904	-1.000	-1.574
84.0		-0.784	-0.895	-1.000	-0.950	-1.001
87.0		-0.002	-0.755	-0.704	-0.879	-1.402
89.0		-0.610	-0.053	-0.002	-0.770	-1.200
93.0		-0.543	-0.553	-0.017	-0.000	0.034
96.0		-0.400	-0.506	-0.544	-0.042	-0.943
100.0		-0.343	-0.340	-0.401	-0.404	-0.000
2.5	LOWER	0.137	0.220	0.307	0.470	0.401
5.0		0.110	0.152	0.310	0.400	0.420
10.0		0.100	0.105	0.202	0.304	0.310
24.0		0.121	0.110	0.103	0.210	0.130
33.0		0.100	0.153	0.107	0.212	0.037
54.0		0.210	0.221	0.252	0.210	0.415
73.5		0.050	0.533	0.504	0.550	0.431
84.0		0.544	0.041	0.039	0.001	0.400
96.0		0.272	0.337	0.315	0.315	0.174

WING PRESSURE COEFFICIENTS

RUN 243 POINT 9 ALPHA 12.01 PSI 0.00 HEIGHT 83.97

X/C %		CP 2	CP 8	CP 12	CP 16	CP 22
0.0	UPPER	0.230	-0.751	-3.007	-3.472	-1.983
2.5		-0.400	-0.750	-1.575	-3.223	-1.400
5.0		-0.300	-0.041	-1.003	-3.250	-1.401
10.0		-0.300	-0.500	-0.801	-0.882	-1.423
15.0		-0.400	-0.500	-0.733	-0.700	-1.430
24.0		-0.370	-0.007	-0.520	-0.577	-1.057
33.0		-0.300	-0.431	-0.404	-0.512	-1.317
54.0		-0.240	-0.230	-0.441	0.400	-0.534
65.0		0.004	-0.475	-0.404	-0.503	-0.430
75.5		0.000	-0.741	-0.740	-0.754	-0.051
78.5		-0.730	-0.770	-0.700	-0.781	-0.003
80.5		-0.710	-0.674	-0.670	-0.700	0.026
81.5		-0.715	-0.601	-0.723	-0.750	-0.540
82.0		-0.005	-0.715	-0.731	-0.733	-0.577
84.0		-0.051	-0.700	-0.005	-0.740	-1.051
87.0		-0.004	-0.003	-0.703	-0.730	-1.055
88.0		-0.011	-0.500	-0.053	-0.700	-0.500
93.0		-0.007	-0.003	-0.000	-0.705	0.040
96.0		-0.001	-0.051	-0.064	-0.725	-1.027
100.0		-0.300	-0.435	-0.522	-0.500	-0.001
2.5	LOWER	0.275	0.400	0.475	0.560	0.401
5.0		0.240	0.201	0.445	0.500	0.170
10.0		0.230	0.230	0.305	0.410	0.202
24.0		0.213	0.211	0.275	0.300	0.201
33.0		0.102	0.220	0.251	0.273	0.043
54.0		0.241	0.250	0.202	0.170	0.304
73.5		0.019	0.521	0.503	0.405	0.433
84.0		0.520	0.042	0.043	0.507	0.450
96.0		0.270	0.310	0.270	0.260	0.100

RUN 243 POINT 14 ALPHA 21.00 PSI 0.00 HEIGHT 84.43

X/C %		CP 2	CP 8	CP 12	CP 16	CP 22
0.0	UPPER	-4.143	-4.027	-2.500	-1.871	-1.312
2.5		-1.000	-0.037	-2.717	-1.070	-1.322
5.0		-1.330	-3.110	-2.740	-2.010	-1.350
10.0		-1.001	-1.122	-2.003	-2.002	-1.330
15.0		-0.025	-1.010	-2.730	-2.030	-1.340
24.0		-0.700	-0.002	-1.070	-2.021	-1.307
33.0		-0.007	-0.014	-1.250	-1.075	-1.270
54.0		-0.025	-0.250	-0.772	0.320	-1.300
65.0		0.047	-0.754	-0.763	-0.007	-1.540
75.5		0.044	-1.207	-1.204	-1.331	-1.300
78.5		-1.430	-1.405	-1.374	-1.057	-1.450
80.5		-1.370	-1.332	-1.212	-1.327	0.004
81.5		-1.100	-0.000	-1.102	-1.300	-1.340
82.0		-1.000	-1.247	-1.113	-1.200	-1.315
84.0		-0.021	-1.124	-1.002	-1.100	-1.342
87.0		-0.720	-0.041	-0.024	-1.025	-1.250
88.0		-0.053	-0.700	-0.000	-0.010	-1.170
93.0		-0.575	-0.015	-0.722	-0.017	0.010
96.0		-0.520	-0.550	-0.067	-0.777	-1.072
100.0		-0.275	-0.302	-0.507	-0.041	-0.070
2.5	LOWER	0.050	0.453	0.410	0.203	0.330
5.0		0.077	0.001	0.505	0.572	0.400
10.0		0.017	0.010	0.013	0.505	0.450
24.0		0.472	0.402	0.400	0.402	0.330
33.0		0.431	0.440	0.447	0.440	0.027
54.0		0.200	0.400	0.414	0.242	0.314
73.5		0.530	0.010	0.010	0.430	0.400
84.0		0.001	0.724	0.022	0.010	0.450
96.0		0.304	0.304	0.332	0.290	0.000

WING PRESSURE COEFFICIENTS

RUN 244 POINT 2 ALPHA 0.00 PSI 0.00 HEIGHT 86.57

X/C %		CP 2	CP 8	CP 12	CP 16	CP 22
0.0	UPPER	-1.415	-1.000	-0.635	0.322	-0.300
2.5		0.005	0.500	-0.354	-0.371	-0.002
5.0		0.572	0.500	-0.430	-0.306	-0.722
10.0		0.370	0.321	-0.501	-0.435	-0.500
15.0		0.245	0.201	-0.031	-0.471	-0.526
24.0		0.077	-0.011	-0.574	-0.540	-0.470
33.0		-0.006	-0.130	-0.500	-0.005	-0.467
54.0		-0.023	-0.372	-0.570	-0.055	-0.635
65.0		-0.003	-0.752	-0.000	-1.340	-0.537
75.5		-0.002	-2.530	-2.025	-3.100	-3.066
79.5		-40.700	-42.002	-42.544	-35.440	-30.130
80.5		-4.105	-4.100	-3.004	-7.033	-0.050
81.5		-2.370	-0.630	-2.700	-3.504	-4.220
82.0		-0.204	-1.044	0.253	-2.707	-2.415
84.0		-2.040	-2.530	-3.223	-2.535	-[illegible] 010
87.0		-0.730	-2.290	-1.440	-1.000	[illegible].134
88.0		-0.022	-1.141	-2.710	-1.721	-0.033
93.0		-0.503	-0.070	-0.502	-1.037	-0.077
96.0		-0.950	-0.773	-0.000	-0.550	-1.050
100.0		-0.077	-0.004	-0.204	-0.200	-0.435
2.5	LOWER	1.500	-0.003	-0.717	-0.200	0.230
5.0		-1.300	-0.015	-0.006	-0.102	0.137
10.0		-1.053	-0.042	-0.010	-0.190	0.057
24.0		-0.400	-0.520	-0.331	-0.104	-0.030
33.0		-0.201	-0.230	-0.320	-0.100	-0.015
54.0		0.031	-0.021	-0.013	-0.005	-0.025
73.5		0.270	0.143	0.105	0.197	0.300
84.0		0.202	0.220	-0.025	0.503	0.470
96.0		0.205	0.333	0.375	0.500	0.340

RUN 244 POINT 4 ALPHA 4.02 PSI 0.00 HEIGHT 86.14

X/C %		CP 2	CP 8	CP 12	CP 16	CP 22
0.0	UPPER	-1.040	-0.002	-0.443	0.154	-2.720
2.5		0.524	0.455	-0.105	-0.074	-1.713
5.0		0.501	0.353	-0.324	-0.027	-1.254
10.0		0.204	0.105	-0.575	-0.534	-0.002
15.0		0.171	0.067	-0.040	-0.635	-0.700
24.0		-0.001	-0.121	-0.750	-0.047	-0.027
33.0		-0.146	-0.230	-0.027	-0.715	-0.000
54.0		-0.033	-0.425	-1.000	-0.060	-0.703
65.0		-0.010	-0.700	-1.207	-1.203	-1.131
75.5		-0.011	-2.004	-3.000	-3.351	-3.400
79.5		-40.337	-42.051	-43.704	-36.100	-31.002
80.5		-4.101	-4.400	-3.003	-7.724	-0.000
81.5		-2.490	-0.021	-3.036	-3.027	-4.012
82.0		-0.455	-2.144	0.010	-2.020	-2.000
84.0		-2.001	-2.730	-3.453	-2.573	-2.300
87.0		-0.002	-2.470	-1.003	-1.024	-1.547
88.0		-0.004	-1.310	-3.030	-1.733	-1.271
93.0		-0.040	-1.030	-0.012	-1.050	-0.034
96.0		-0.000	-0.010	-0.300	-0.530	-2.002
100.0		-0.100	-0.121	-0.174	-0.101	-0.430
2.5	LOWER	-2.111	-0.005	-0.000	0.042	0.417
5.0		-1.300	-0.021	-0.553	0.027	0.343
10.0		-0.770	-0.017	-0.415	0.010	0.230
24.0		-0.204	-0.323	-0.113	0.043	0.073
33.0		-0.110	-0.120	0.004	0.115	-0.025
54.0		0.200	0.103	0.215	0.004	-0.047
73.5		0.254	0.354	0.300	0.201	0.340
84.0		0.440	0.450	-0.035	0.500	0.430
96.0		0.570	0.610	0.471	0.557	0.313

WING PRESSURE COEFFICIENTS

RUN 244 POINT 6 ALPHA 8.02 PSI 0.00 HEIGHT 85.12

X/C, %		DP 2	DP 6	DP 12	DP 16	DP 22
0.0	(UPPER)	-1.833	-1.512	0.022	-0.715	-3.790
2.5		0.511	0.207	-0.335	-1.163	-3.072
5.0		0.363	0.137	-0.441	-0.883	-2.702
10.0		0.138	-0.066	-0.606	-0.910	-1.843
15.0		0.022	-0.150	-0.807	-0.872	-1.212
24.0		-0.136	-0.313	-0.842	-0.834	-0.853
33.0		-0.263	-0.410	-0.885	-0.873	-0.811
54.0		-0.611	-0.515	-1.143	-0.862	-1.041
65.0		-0.830	-0.836	-1.461	-1.470	-1.411
75.5		-0.657	-2.007	-3.843	-3.720	-4.000
79.5		-45.405	-42.824	-43.360	-35.060	-31.535
80.5		-4.488	-4.774	-4.440	-8.187	-9.083
81.5		-2.742	-8.588	-3.455	-4.000	-5.818
82.0		-0.757	-2.453	-0.387	-3.172	-3.952
84.0		-3.108	-3.636	-3.576	-2.864	-3.700
87.0		-1.600	-2.744	-1.862	-1.863	-2.358
88.0		-1.172	-1.900	-2.268	-1.826	-2.081
93.0		-0.824	-1.248	-1.135	-1.831	-0.059
95.0		-0.827	-1.081	-0.527	-0.478	-2.530
100.0		-0.400	-0.388	-0.368	-0.273	-0.588
2.5	(LOWER)	-1.307	-1.431	-0.372	0.368	0.402
5.0		-0.878	-0.388	-0.154	0.273	0.426
10.0		-0.410	-0.733	-0.082	0.243	0.346
24.0		-0.111	-0.054	0.087	0.203	0.152
33.0		0.010	0.079	0.182	0.215	-0.042
54.0		0.312	0.298	0.374	0.686	-0.045
73.5		0.345	0.724	0.705	0.457	0.345
84.0		0.760	0.900	-0.058	0.835	0.449
98.0		0.684	0.777	0.736	0.763	0.283

RUN 244 POINT 8 ALPHA 11.98 PSI 0.00 HEIGHT 84.75

X/C, %		DP 2	DP 6	DP 12	DP 16	DP 22
0.0	(UPPER)	-0.745	-0.115	0.117	-2.933	-3.782
2.5		0.300	0.041	-0.782	-1.763	-3.911
5.0		0.188	-0.115	-0.724	-1.440	-3.010
10.0		-0.045	-0.283	-0.829	-1.251	-3.885
15.0		-0.100	-0.305	-0.857	-1.152	-2.741
24.0		-0.327	-0.521	-0.916	-1.062	-1.905
33.0		-0.438	-0.615	-0.950	-1.078	-0.860
54.0		-0.582	-0.904	-1.243	-0.038	-1.240
65.0		-0.057	-1.120	-1.583	-1.044	-1.733
75.5		-0.084	-2.187	-3.878	-4.010	-5.141
79.5		-45.884	-43.354	-43.829	-36.410	-34.043
80.5		-4.058	-5.005	-4.480	-8.583	-9.113
81.5		-2.007	-0.953	-3.813	-4.342	-7.058
82.0		-1.021	-2.703	-0.490	-3.480	-5.000
84.0		-3.436	-3.204	-3.720	-3.142	-4.171
87.0		-1.303	-2.022	-2.058	-2.212	-3.077
88.0		-1.383	-1.740	-3.317	-2.043	-2.760
93.0		-1.040	-1.407	-1.142	-1.868	-0.009
95.0		-0.977	-1.214	-0.543	-0.007	-2.824
100.0		-0.540	-0.483	-0.300	-0.433	-0.862
2.5	(LOWER)	-0.972	-0.580	0.073	0.340	0.248
5.0		-0.833	-0.102	0.095	0.384	0.411
10.0		-0.313	-0.335	0.134	0.305	0.309
24.0		0.018	0.106	0.214	0.292	0.210
33.0		0.118	0.218	0.280	0.278	-0.056
54.0		0.308	0.345	0.381	0.095	-0.052
73.5		0.235	0.795	0.878	0.532	0.350
84.0		0.905	1.054	-0.078	1.068	0.480
98.0		0.887	0.725	0.702	0.787	0.318

WING PRESSURE COEFFICIENTS

RUN 244 POINT 13 ALPHA 22.01 PSI 0.00 HEIGHT 83.47

X/C, %		DP 2	DP 6	DP 12	DP 16	DP 22
0.0	(UPPER)	0.047	0.446	-7.300	-0.100	-3.005
2.5		-0.000	-0.834	-2.000	-0.906	-4.100
5.0		-0.202	-0.882	-2.251	-0.312	-4.214
10.0		-0.906	-0.948	-1.790	-2.010	-4.000
15.0		-0.829	-0.978	-1.051	-1.752	-0.402
24.0		-0.775	-0.985	-1.382	-1.504	-4.581
33.0		-0.861	-1.036	-1.290	-1.474	-2.863
54.0		-0.880	-0.782	-1.478	-0.606	-1.723
65.0		-0.145	-1.494	-1.814	-1.943	-2.005
75.5		-0.151	-3.723	-4.361	-4.706	-5.621
79.5		-47.304	-44.704	-45.378	-38.510	-35.264
80.5		-5.256	-5.407	-4.704	-9.442	-9.100
81.5		-3.610	-0.538	-4.024	-5.022	-7.670
82.0		-1.000	-3.075	-0.001	-4.176	-5.587
84.0		-3.829	-3.828	-3.857	-3.863	-4.523
87.0		-1.702	-3.120	-2.211	-2.825	-3.220
88.0		-1.710	-1.900	-3.420	-2.387	-2.827
93.0		-1.300	-1.501	-1.131	-2.222	-0.150
95.0		-1.210	-1.205	-0.472	-0.736	-2.795
100.0		-0.500	-0.207	-0.325	-0.319	-0.455
2.5	(LOWER)	-0.022	0.290	0.149	-0.207	-0.243
5.0		-0.300	0.430	0.413	0.278	0.215
10.0		0.047	0.374	0.686	0.500	0.383
24.0		0.288	0.404	0.407	0.483	0.331
33.0		0.337	0.427	0.485	0.472	-0.117
54.0		0.500	0.435	0.507	0.074	-0.134
73.5		0.185	0.704	0.710	0.374	0.101
84.0		0.820	0.883	-0.152	0.714	0.274
98.0		0.575	0.755	0.850	0.509	0.331

RUN 245 POINT 3 ALPHA 0.00 PSI 0.00 HEIGHT 85.00

X/C, %		DP 2	DP 6	DP 12	DP 16	DP 22
0.0	(UPPER)	-0.832	-0.817	-0.729	-0.078	-0.266
2.5		0.000	0.041	-0.431	-0.402	-0.000
5.0		0.575	0.545	-0.450	-0.405	-0.782
10.0		0.398	0.357	-0.450	-0.828	-0.849
15.0		0.248	0.222	-0.428	-0.725	-0.587
24.0		0.068	-0.036	-0.377	-0.911	-0.550
33.0		-0.000	-0.180	-0.349	-1.133	-0.577
54.0		0.248	-0.158	-0.578	0.572	-0.790
65.0		-0.078	-0.888	-0.942	-1.475	-1.122
75.5		-0.600	-2.978	-3.398	-3.704	-3.705
79.5		-84.402	-78.203	-74.765	-61.878	-34.631
80.5		-5.924	-5.180	-6.575	-11.935	-0.100
81.5		-2.302	-0.024	-2.817	-4.586	-5.872
82.0		1.548	-1.007	3.031	-3.187	-2.550
84.0		-3.904	-2.030	-4.384	-2.010	-2.012
87.0		-0.224	-3.007	-1.138	-1.732	-0.003
88.0		-0.708	-1.217	-3.647	-1.787	-0.387
93.0		-0.496	-1.077	-0.248	-2.310	-0.001
95.0		-0.053	-1.003	0.521	-0.047	-2.150
100.0		-0.148	-0.121	-0.535	-0.758	-0.842
2.5	(LOWER)	-0.500	-0.504	-0.004	-0.555	0.006
5.0		-0.582	-0.554	-0.633	-0.585	-0.031
10.0		-0.588	-0.509	-0.842	-0.813	-0.122
24.0		-0.586	-0.638	-0.866	-0.829	-0.210
33.0		-0.634	-0.682	-0.889	-0.555	-0.064
54.0		-0.558	-0.603	-0.518	-0.300	0.117
73.5		0.475	-0.254	-0.129	0.486	0.425
84.0		0.072	-0.056	-0.057	0.588	0.586
98.0		0.681	0.185	0.358	0.550	0.376

WING PRESSURE COEFFICIENTS

RUN 245 POINT 5 ALPHA 4.01 PSI 0.00 HEIGHT 86.04

X/C, %		BP 2	BP 6	BP 12	BP 16	BP 22
0.0	UPPER	-0.882	-0.526	-0.545	-0.605	-2.034
2.5		0.081	0.511	-0.307	-0.581	-1.510
5.0		0.536	0.487	-0.478	-0.821	-1.151
10.0		0.363	0.319	-0.688	-0.868	-0.883
15.0		0.214	0.176	-0.802	-0.752	-0.736
24.0		0.030	-0.060	-0.884	-0.811	-0.843
33.0		-0.133	-0.108	-0.811	-0.907	-0.838
54.0		0.153	-0.239	-0.903	0.413	-0.831
66.0		-0.076	-0.875	-1.183	-1.077	-1.106
78.5		-0.862	-3.000	-3.607	-4.130	-3.826
79.5		-84.360	-78.433	-74.747	-82.346	-34.766
80.5		-0.055	-0.337	-0.404	-11.821	-0.090
81.5		-2.505	-0.136	-2.710	-4.082	-5.827
82.0		1.422	-1.843	2.907	-3.270	-2.813
84.0		-3.900	-3.104	-4.050	-3.114	-2.163
87.0		-0.313	-3.210	-1.307	-2.027	-1.001
88.0		-0.807	-1.361	-4.037	-2.150	-0.030
93.0		-0.503	-1.202	-0.462	-2.702	-0.003
96.0		-0.730	-1.106	0.250	-0.446	-2.494
100.0		-0.055	-0.015	-0.343	-0.578	-0.781
2.5	LOWER	-0.055	-0.427	-0.500	-0.354	0.350
5.0		-0.042	-0.405	-0.545	-0.388	0.216
10.0		-0.502	-0.427	-0.560	-0.412	0.007
24.0		-0.481	-0.540	-0.560	-0.428	-0.050
33.0		-0.507	-0.586	-0.578	-0.338	-0.430
54.0		-0.642	-0.438	-0.282	-0.271	0.022
73.5		0.245	-0.005	0.132	0.421	0.425
84.0		0.186	0.171	-0.050	0.754	0.580
96.0		0.288	0.431	0.590	0.729	0.391

RUN 245 POINT 7 ALPHA 8.02 PSI 0.00 HEIGHT 85.35

X/C, %		BP 2	BP 6	BP 12	BP 16	BP 22
0.0	UPPER	-1.058	-1.072	-0.424	-0.502	-4.071
2.5		0.500	0.240	-0.448	-0.887	-3.213
5.0		0.464	0.215	-0.800	-0.885	-2.274
10.0		0.252	0.041	-0.761	-0.968	-1.367
15.0		0.080	-0.083	-0.875	-0.908	-1.036
24.0		-0.087	-0.271	-1.011	-0.930	-0.882
33.0		-0.230	-0.372	-1.070	-0.988	-0.888
54.0		0.087	-0.300	-1.340	0.205	-1.137
66.0		-0.003	-0.081	-1.081	-1.783	-1.517
78.5		-0.111	-3.257	-4.132	-4.522	-4.700
79.5		-80.800	-80.287	-78.735	-80.087	-37.214
80.5		-0.231	-5.804	-0.412	-12.001	-0.005
81.5		-2.717	-0.187	-3.305	-5.004	-7.396
82.0		1.218	-2.068	2.395	3.017	-4.127
84.0		-4.227	-3.405	-4.060	-3.431	-3.334
87.0		-0.510	-3.510	-1.781	-2.187	-2.050
88.0		-1.008	-1.841	-4.086	-2.302	-1.082
93.0		-0.870	-1.478	-1.020	-2.773	-0.115
96.0		-0.001	-1.300	-0.255	-0.416	-3.278
100.0		-0.430	-0.253	-0.438	-0.554	-0.871
2.5	LOWER	-1.706	-0.009	-0.005	0.040	0.380
5.0		-1.014	-0.058	-0.512	0.005	0.386
10.0		-1.141	-0.347	-0.425	0.018	0.282
24.0		-0.428	-0.416	-0.140	0.020	0.006
33.0		-0.101	-0.268	-0.058	0.130	-0.003
54.0		0.151	0.115	0.177	-0.182	-0.055
73.5		0.247	0.327	0.380	0.379	0.348
84.0		0.406	0.473	-0.008	0.584	0.486
96.0		0.004	0.600	0.003	0.874	0.330

WING PRESSURE COEFFICIENTS

RUN 245 POINT 9 ALPHA 12.00 PSI 0.00 HEIGHT 82.32

X/C, %		BP 2	BP 6	BP 12	BP 16	BP 22
0.0	UPPER	-2.050	-1.307	-0.145	-1.235	-0.905
2.5		0.534	0.214	-0.513	-1.012	-4.071
5.0		0.250	0.047	-0.888	-1.302	-4.005
10.0		0.118	-0.130	-0.849	-1.283	-3.306
15.0		-0.068	-0.290	-0.955	-1.248	-1.800
24.0		-0.251	-0.490	-1.086	-1.227	-1.003
33.0		-0.414	-0.607	-1.178	-1.240	-1.007
54.0		0.002	-0.307	-1.530	0.224	-1.470
66.0		-0.130	-1.210	-1.026	-1.004	-1.970
78.5		-0.104	-3.635	-4.645	-4.808	-6.000
79.5		-83.707	-78.178	-78.127	-82.906	-38.077
80.5		-0.548	-6.186	-7.404	-13.025	-0.090
81.5		-3.110	-0.203	-3.720	-5.534	-8.953
82.0		0.717	-2.486	1.290	-4.000	-5.610
84.0		-4.522	-3.794	-5.068	-3.798	-4.507
87.0		-0.607	-3.810	-2.073	-2.472	-3.080
88.0		-1.353	-1.504	-4.011	-2.520	-2.043
93.0		-0.996	-1.766	-1.303	-2.917	-0.156
96.0		-1.129	-1.607	-0.537	-0.500	-3.773
100.0		-1.005	-0.203	-0.848	-0.787	-1.026
2.5	LOWER	-1.888	-1.505	-0.354	0.280	0.210
5.0		-1.267	-0.777	-0.233	0.247	0.300
10.0		-0.727	-1.353	-0.151	0.207	0.300
24.0		-0.183	-0.101	0.078	0.188	0.109
33.0		0.004	0.060	0.159	0.275	-0.126
54.0		0.330	0.332	0.409	-0.070	-0.112
73.5		0.184	0.007	0.714	0.544	0.307
84.0		0.008	1.128	-0.128	0.882	0.405
96.0		0.824	0.895	0.810	0.727	0.250

RUN 245 POINT 14 ALPHA 22.03 PSI 0.00 HEIGHT 96.51

X/C, %		BP 2	BP 6	BP 12	BP 16	BP 22
0.0	UPPER	-0.413	0.734	-1.303	-7.304	-0.138
2.5		0.207	-0.258	-1.983	-3.588	-6.450
5.0		-0.074	-0.058	-1.884	-2.787	-7.137
10.0		-0.256	-0.772	-1.815	-2.356	-7.002
15.0		-0.545	-0.906	-1.508	-2.118	-4.784
24.0		-0.748	-1.003	-1.402	-1.003	-2.539
33.0		-0.888	-1.007	-1.472	-1.775	-2.113
54.0		-0.006	-1.200	-1.048	0.100	-2.383
66.0		-0.288	-1.050	-2.267	-2.471	-2.707
78.5		-0.302	-4.338	-5.317	-5.912	-7.520
79.5		-88.436	-78.055	-78.588	-86.110	-41.713
80.5		-7.424	-7.004	-7.849	-14.279	-0.248
81.5		-4.035	-0.130	-4.255	-6.408	-10.004
82.0		-0.273	-2.981	1.526	-4.882	-7.138
84.0		-5.414	-4.303	-5.238	-4.518	-5.573
87.0		-1.743	-4.242	-2.355	-2.895	-3.590
88.0		-2.026	-2.301	-5.122	-2.900	-3.030
93.0		-1.495	-2.070	-1.402	-3.234	-0.254
96.0		-1.813	-1.819	-0.000	-0.774	-3.721
100.0		-1.222	-0.956	-1.014	-1.042	-1.123
2.5	LOWER	-0.983	0.643	0.377	-0.103	-0.007
5.0		-0.582	0.300	0.385	0.182	0.048
10.0		-0.184	0.166	0.352	0.389	0.300
24.0		0.156	0.337	0.428	0.383	0.282
33.0		0.339	0.400	0.440	0.420	-0.213
54.0		0.535	0.431	0.503	-0.119	0.227
73.5		0.043	0.754	0.748	0.305	0.244
84.0		1.010	0.898	-0.231	0.870	0.457
96.0		0.726	0.730	0.983	0.591	0.223

WING PRESSURE COEFFICIENTS

RUN 246 POINT 2 ALPHA 0.01 PSI 0.00 HEIGHT 80.02

X/C, %		BP 2	BP 6	BP 12	BP 16	BP 22
0.0	(UPPER)	-0.702	-0.841	-1.032	-0.582	-0.235
2.5		0.713	0.768	0.316	-0.375	-1.071
5.0		0.595	0.248	0.174	-0.445	-0.800
10.0		0.408	0.580	0.060	-0.682	-0.903
15.0		0.237	0.233	-0.017	-0.786	-0.580
24.0		-0.083	0.040	-0.220	-0.984	-0.735
33.0		-0.252	-0.257	-0.288	-0.886	-0.648
54.0		-0.981	-1.138	-0.825	-0.806	-0.887
65.0		-0.232	-1.071	-1.260	-1.530	-1.182
78.5		-0.204	-3.734	-4.500	-4.719	-4.414
79.5		-159.524	-142.057	-130.027	-110.348	-81.317
80.5		-8.312	-7.447	-10.544	-19.803	-0.240
81.5		-2.586	-1.060	-2.348	-6.874	-8.300
82.0		4.531	-0.784	5.342	-3.114	-2.081
84.0		-5.748	-4.038	-5.185	-3.531	-1.502
87.0		0.708	-4.810	-0.650	-1.868	0.291
88.0		-0.464	-1.468	-6.068	-1.878	0.479
93.0		-0.274	-1.454	0.215	-3.336	-0.168
98.0		-0.882	-1.290	1.303	0.664	-2.944
100.0		-0.536	-0.677	-1.537	-1.782	-1.845
2.5	(LOWER)	-0.782	-0.886	-0.938	-1.068	0.085
5.0		-0.848	-0.832	-0.755	-0.953	-0.153
10.0		-0.638	-0.805	-0.860	-0.830	-0.228
24.0		-0.924	-0.780	-0.968	-1.043	-0.384
33.0		-0.711	-0.903	-0.895	-0.943	-0.968
54.0		-0.782	-1.062	-0.860	-1.312	-1.452
73.5		-0.840	-0.780	-0.638	-0.433	0.282
84.0		-0.005	-0.368	-0.137	0.542	0.640
86.0		0.017	-0.017	0.144	0.438	0.348

RUN 246 POINT 4 ALPHA 4.00 PSI 0.00 HEIGHT 80.40

X/C, %		BP 2	BP 6	BP 12	BP 16	BP 22
0.0	(UPPER)	-0.788	-0.877	-1.014	-0.825	-1.564
2.5		0.805	0.786	-0.473	-0.568	-1.810
5.0		0.520	0.025	-0.650	-0.647	-1.098
10.0		0.376	0.468	-0.668	-0.904	-1.063
15.0		0.183	0.105	-0.640	-1.056	-0.752
24.0		-0.110	-0.108	-0.684	-1.341	-0.856
33.0		-0.308	-0.301	-0.836	-1.495	-0.964
54.0		-0.942	-1.083	-0.938	-0.708	-1.049
65.0		-0.238	-1.071	-1.282	-2.135	-1.388
78.5		-0.288	-3.723	-4.371	-4.843	-4.904
79.5		-156.708	-143.938	-130.588	-110.808	-82.409
80.5		-8.485	-7.580	-10.231	-19.877	-0.208
81.5		-2.746	-1.018	-2.352	-6.081	-8.811
82.0		4.450	-0.908	8.331	-3.331	-3.144
84.0		-5.820	-4.128	-5.332	-3.816	-1.860
87.0		0.585	-4.688	-0.684	-2.041	-0.007
89.0		-0.587	-1.495	-6.111	-2.158	0.164
93.0		-0.344	-1.574	0.125	-3.601	-0.188
98.0		-0.868	-1.526	1.107	0.345	-3.444
100.0		-0.468	-0.570	-1.238	-1.858	-1.657
2.5	(LOWER)	-0.818	-0.726	-1.118	-0.836	0.281
5.0		-0.808	-0.881	-0.908	-0.895	0.065
10.0		-0.683	-0.686	-1.018	-0.817	-0.117
24.0		-0.908	-0.856	-1.004	-0.979	-0.198
33.0		-0.805	-0.975	-1.025	-0.811	-0.087
54.0		-0.630	-0.960	-0.751	-1.227	-1.430
73.5		-0.930	-0.530	-0.210	-0.421	0.287
84.0		0.124	-0.082	-0.142	0.787	0.848
86.0		0.148	0.220	0.504	0.888	0.344

WING PRESSURE COEFFICIENTS

RUN 246 POINT 6 ALPHA 8.00 PSI 0.00 HEIGHT 84.01

X/C, %		BP 2	BP 6	BP 12	BP 16	BP 22
0.0	(UPPER)	-0.808	-0.787	-0.773	-0.821	-3.384
2.5		0.629	0.482	-0.581	-0.748	-2.302
5.0		0.437	0.300	-0.895	-0.795	-1.450
10.0		0.268	0.281	-0.958	-1.004	-1.290
15.0		0.102	0.001	-0.958	-1.141	-0.906
24.0		-0.158	-0.136	-1.056	-1.417	-0.982
33.0		-0.343	-0.344	-1.021	-1.554	-1.077
54.0		-0.882	-1.045	-1.310	-0.846	-1.262
65.0		-0.235	-1.078	-1.588	-2.344	-1.562
78.5		-0.289	-3.945	-4.878	-5.433	-5.411
79.5		-157.171	-145.088	-132.555	-112.822	-83.723
80.5		-8.788	-7.962	-10.863	-20.582	-0.255
81.5		-2.072	-1.018	-2.824	-6.844	-8.877
82.0		4.320	-1.247	7.955	-3.838	-3.958
84.0		-6.022	-4.467	-5.600	-4.423	-2.968
87.0		0.456	-5.034	-1.062	-2.500	-0.775
88.0		-0.879	-1.745	-6.500	-2.726	-0.582
93.0		-0.447	-1.834	-0.229	-4.155	-0.204
98.0		-1.045	-1.761	0.812	-0.100	-4.199
100.0		-0.556	-0.409	-0.910	-1.381	-1.582
2.5	(LOWER)	-0.787	-0.830	-0.864	-0.784	0.388
5.0		-0.781	-0.583	-0.707	-0.744	0.232
10.0		-0.587	-0.589	-0.877	-0.638	0.068
24.0		-0.837	-0.781	-0.817	-0.748	-0.048
33.0		-0.748	-0.918	-0.817	-0.538	-0.008
54.0		-0.427	-0.730	-0.489	-1.018	-1.404
73.5		-0.906	-0.223	0.135	-0.422	0.327
84.0		0.288	0.228	-0.148	0.945	0.850
86.0		0.[illegible]54	0.517	0.805	0.835	0.378

RUN 246 POINT 8 ALPHA 11.99 PSI 0.00 HEIGHT 86.43

X/C, %		BP 2	BP 6	BP 12	BP 16	BP 22
0.0	(UPPER)	-0.838	-0.825	-0.754	-0.904	-6.590
2.5		0.540	0.325	-0.711	-1.066	-4.205
5.0		0.329	0.138	-0.871	-1.016	-2.879
10.0		0.154	0.062	-1.030	-1.175	-1.839
15.0		-0.055	-0.270	-1.089	-1.262	-1.336
24.0		-0.380	-0.416	-1.280	-1.483	-1.345
33.0		-0.506	-0.588	-1.328	-1.652	-1.423
54.0		-0.800	-0.982	-1.826	-0.577	-1.813
65.0		-0.289	-1.243	-2.189	-2.526	-2.080
78.5		-0.341	-4.142	-5.419	-6.063	-6.896
79.5		-158.504	-146.474	-135.924	-115.047	-87.073
80.5		-9.181	-8.210	-11.038	-21.339	-0.318
81.5		-3.182	-0.962	-3.472	-7.327	-11.906
82.0		4.085	-1.473	7.443	-4.591	-5.883
84.0		-6.339	-4.785	-6.272	-4.954	-4.388
87.0		0.213	-5.337	-1.525	-2.984	-2.248
89.0		-0.882	-2.061	-7.107	-3.094	-1.939
93.0		-0.601	-2.111	-0.845	-4.462	-0.246
98.0		-1.180	-1.983	0.175	-0.280	-5.113
100.0		-0.841	-0.723	-1.095	-1.500	-1.730
2.5	(LOWER)	-0.847	-0.710	-0.830	-0.449	0.310
5.0		-0.912	-0.660	-0.758	-0.420	0.327
10.0		-0.703	-0.843	-0.849	-0.310	0.213
24.0		-0.887	-0.797	-0.711	-0.411	0.066
33.0		-0.738	-0.839	-0.598	-0.188	-0.144
54.0		-0.072	-0.385	-0.076	-0.856	-1.384
73.5		-0.880	0.083	0.374	-0.392	0.285
84.0		0.407	0.500	-0.191	1.030	0.593
86.0		0.618	0.730	0.895	0.860	0.310

WING PRESSURE COEFFICIENTS

RUN 246 POINT 13 ALPHA 22.00 PSI 0.00 HEIGHT 87.87

X/C, %		BP 2	BP 6	BP 12	BP 16	BP 22
0.0	(UPPER)	-3.191	-1.727	-0.454	-3.387	-8.193
2.5		0.417	-0.001	-0.873	-2.680	-8.446
5.0		0.120	-0.277	-1.188	-2.194	-8.847
10.0		-0.120	-0.376	-1.283	-2.100	-9.812
15.0		-0.350	-0.806	-1.300	-2.064	-3.240
24.0		-0.770	-0.927	-1.526	-2.130	-2.279
33.0		-0.906	-1.133	-1.610	-2.080	-2.283
54.0		-0.760	-1.305	-2.342	-0.553	-2.546
65.0		-0.455	-1.789	-2.814	-2.050	-3.026
78.5		-0.532	-5.078	-8.479	-8.812	-8.841
79.5		-161.122	-148.546	-137.521	-118.303	-70.539
80.5		-16.503	-9.511	-12.325	-22.448	-0.516
81.5		-4.488	-0.816	-4.234	-8.019	-14.040
82.0		2.842	-2.368	8.849	-5.214	-7.844
84.0		-7.671	-5.744	-8.750	-9.394	-5.700
87.0		-1.016	-8.188	-2.186	-3.368	-3.005
89.0		-1.950	-2.841	-7.824	-3.418	-2.544
93.0		-1.477	-2.771	-1.447	-4.753	-0.407
96.0		-1.929	-2.550	-0.377	-0.487	-5.148
100.0		-2.449	-2.419	-2.281	-1.848	-1.868
2.5	(LOWER)	-3.488	-1.757	-0.387	0.144	-0.548
5.0		-2.178	-0.773	-0.134	0.206	0.060
10.0		-0.818	-1.400	-0.182	0.337	0.266
24.0		-0.266	0.032	0.120	0.123	0.232
33.0		0.215	0.220	0.208	0.272	-0.288
54.0		0.579	0.336	0.447	-0.788	-1.445
73.5		-0.053	0.863	0.982	-0.474	0.101
84.0		1.198	1.463	-0.362	1.181	0.435
96.0		0.860	0.970	1.050	0.886	0.184

RUN 247 POINT 2 ALPHA 0.01 PSI 0.00 HEIGHT 88.40

X/C, %		BP 2	BP 6	BP 12	BP 16	BP 22
0.0	(UPPER)	-1.117	-1.438	-0.831	0.308	-0.213
2.5		0.584	0.889	2.045	0.082	-1.108
5.0		0.367	0.658	0.894	-0.247	-0.875
10.0		0.303	0.758	0.211	-0.832	-1.181
15.0		0.087	0.081	0.134	-0.885	-0.558
24.0		-0.424	-0.100	-0.196	-1.206	-0.987
33.0		-0.582	-0.459	-0.240	-1.158	-1.286
54.0		-2.088	-2.358	-1.258	-2.006	-0.886
65.0		-0.548	-1.481	-1.845	-1.807	-1.207
78.5		-0.876	-5.101	-8.742	-8.335	-5.358
79.5		-320.431	-288.984	-255.188	-220.589	-121.973
80.5		-13.871	-12.509	-19.134	-36.868	-0.550
81.5		-3.100	-2.730	-1.740	-8.526	-13.990
82.0		11.850	1.342	20.407	-3.180	-2.282
84.0		-10.151	-8.473	-8.253	-4.668	-0.563
87.0		2.604	-8.178	0.444	-1.445	2.828
89.0		0.112	-1.728	-11.021	-1.889	2.915
93.0		0.108	-2.248	1.288	-5.813	-0.422
96.0		-1.441	-2.301	3.177	2.170	-4.387
100.0		-3.096	-3.622	-4.030	-3.808	-3.388
2.5	(LOWER)	-1.418	-1.187	-2.028	-2.487	0.000
5.0		-1.587	-1.002	-1.588	-1.844	-0.341
10.0		-1.021	-0.870	-1.875	-1.281	-0.524
24.0		-1.800	-1.298	-1.749	-1.548	-0.411
33.0		-1.104	-1.526	-1.767	-1.159	-0.187
54.0		-1.031	-1.791	-1.388	-2.890	-4.053
73.5		-2.008	-1.226	-0.518	-1.927	-0.194
84.0		-0.034	-0.367	-0.310	0.488	0.386
96.0		0.151	-0.110	0.037	0.117	-0.016

WING PRESSURE COEFFICIENTS

RUN 247 POINT 4 ALPHA 4.01 PSI 0.00 HEIGHT 87.82

X/C, %		BP 2	BP 6	BP 12	BP 16	BP 22
0.0	(UPPER)	-1.017	-1.312	-1.525	-1.187	-1.520
2.5		0.614	0.860	0.852	-0.425	-1.966
5.0		0.370	0.805	0.248	-0.543	-1.235
10.0		0.306	0.723	0.127	-0.980	-1.484
15.0		0.043	0.056	0.071	-1.143	-0.857
24.0		-0.388	-0.081	-0.287	-1.456	-1.144
33.0		-0.542	-0.462	-0.353	-1.437	-1.420
54.0		-1.611	-1.838	-1.323	-1.517	-1.204
65.0		-0.518	-1.445	-1.898	-2.118	-1.456
78.5		-0.619	-4.982	-8.558	-6.573	-5.885
79.5		-308.527	-270.983	-248.598	-213.631	-118.433
80.5		-13.401	-12.480	-18.151	-36.051	-0.844
81.5		-2.889	-2.254	-1.354	-8.830	-14.086
82.0		11.480	0.848	18.355	-3.868	-2.849
84.0		-8.851	-8.357	-8.146	-5.026	-1.028
87.0		2.558	-7.938	0.318	-1.689	2.188
89.0		0.131	-1.747	-10.633	-2.141	2.318
93.0		0.158	-2.318	1.174	-5.718	-0.420
96.0		-1.335	-2.352	2.898	1.912	-4.800
100.0		-1.868	-2.078	-3.321	-3.571	-3.166
2.5	(LOWER)	-1.350	-1.100	-1.604	-1.840	0.207
5.0		-1.451	-0.845	-1.218	-1.867	-0.173
10.0		-0.957	-0.910	-1.472	-1.357	-0.484
24.0		-1.522	-1.235	-1.490	-1.781	-0.503
33.0		-1.088	-1.460	-1.633	-1.554	-0.188
54.0		-1.160	-1.823	-1.832	-2.339	-3.608
73.5		-2.598	-1.443	-1.040	-1.484	-0.046
84.0		-0.212	-0.576	-0.305	0.538	0.525
96.0		-0.028	-0.113	0.040	0.287	0.148

RUN 247 POINT 6 ALPHA 7.99 PSI 0.00 HEIGHT 87.88

X/C, %		BP 2	BP 6	BP 12	BP 16	BP 22
0.0	(UPPER)	-0.972	-1.233	-1.552	-1.867	-1.383
2.5		0.610	0.883	-0.398	-1.087	-1.843
5.0		0.388	0.506	-0.687	-1.150	-1.282
10.0		0.383	0.707	-0.590	-1.553	-1.501
15.0		0.121	0.085	-0.460	-1.783	-0.930
24.0		-0.314	-0.048	-0.562	-2.184	-1.227
33.0		-0.484	-0.371	-0.488	-2.244	-1.542
54.0		-1.341	-1.619	-1.192	-1.215	-1.441
65.0		-0.425	-1.314	-1.593	-2.347	-1.742
78.5		-0.532	-4.944	-5.840	-5.783	-[illegible].02
79.5		-297.550	-270.982	-235.825	-204.473	-118.180
80.5		-13.067	-12.302	-18.748	-34.005	-0.545
81.5		-2.922	-2.034	-1.488	-8.105	-14.843
82.0		10.993	0.584	18.683	-3.455	-3.089
84.0		-9.464	-8.495	-7.895	-4.881	-2.332
87.0		2.348	-7.868	0.434	-1.697	1.417
89.0		0.060	-1.830	-10.016	-2.063	1.358
93.0		0.184	-2.385	1.234	-5.485	-0.364
96.0		-1.184	-2.432	2.842	1.702	-5.016
100.0		-1.335	-1.527	-2.278	-3.023	-3.012
2.5	(LOWER)	-1.350	-1.121	-1.856	-1.676	0.123
5.0		-1.387	-0.877	-1.245	-1.715	-0.200
10.0		-0.981	-0.932	-1.523	-1.437	-0.401
24.0		-1.540	-1.266	-1.523	-1.887	-0.390
33.0		-1.168	-1.480	-1.612	-1.437	-0.134
54.0		-0.843	-1.835	-1.245	-2.082	-3.284
73.5		-2.304	-1.004	-0.470	-1.208	0.183
84.0		0.049	-0.214	-0.249	0.833	0.749
96.0		0.051	0.136	0.588	0.682	0.334

WING PRESSURE COEFFICIENTS

RUN 247 POINT 8 ALPHA 11.99 PSI 0.00 HEIGHT 88.57

X/C, %		BP 2	BP 6	BP 12	BP 16	BP 22
0.0	(UPPER)	-1.212	-1.425	-1.593	-2.406	-3.199
2.5		0.519	0.517	-1.181	-1.052	-2.768
5.0		0.286	0.296	-1.553	-1.647	-1.828
10.0		0.220	0.502	-1.373	-2.053	-2.025
15.0		-0.009	-0.133	-1.066	-2.331	-1.420
24.0		-0.534	-0.233	-1.189	-2.806	-1.874
33.0		-0.890	-0.561	-1.027	-2.877	-2.009
54.0		-1.351	-1.821	-1.773	-1.1[illegible]	-2.018
85.0		-0.555	-1.539	-2.215	-3.247	-2.533
78.5		-0.864	-5.505	-6.873	-7.403	-8.470
79.5		-327.984	-299.553	-264.718	-228.735	-129.783
80.5		-14.872	-13.516	-18.937	-38.620	-0.894
81.5		-3.472	-2.095	-2.454	-10.234	-17.683
82.0		11.795	0.448	19.909	-4.868	-5.592
84.0		-10.756	-7.323	-9.356	-8.410	-3.882
87.0		2.388	-8.941	-0.079	-2.824	-0.008
89.0		-0.149	-2.302	-11.802	-3.128	0.077
93.0		0.005	-2.948	0.830	-8.774	-0.484
96.0		-1.488	-3.013	2.982	1.258	-7.806
100.0		-1.892	-1.864	-2.811	-3.456	-3.385
2.5	(LOWER)	-1.550	-1.295	-1.756	-1.880	0.370
5.0		-1.638	-1.183	-1.392	-1.818	0.045
10.0		-1.188	-1.113	-1.707	-1.528	-0.191
24.0		-1.785	-1.507	-1.719	-1.854	-0.203
33.0		-1.383	-1.704	-1.756	-1.220	-0.248
54.0		-0.754	-1.802	-1.022	-2.188	-3.468
73.5		-2.416	-0.836	-0.086	-1.209	0.108
84.0		0.170	-0.027	-0.358	1.170	0.732
96.0		0.102	0.370	0.952	0.889	0.268

RUN 247 POINT 13 ALPHA 22.00 PSI 0.00 HEIGHT 88.57

X/C, %		BP 2	BP 6	BP 12	BP 16	BP 22
0.0	(UPPER)	-1.380	-1.538	-1.830	-2.060	-11.147
2.5		0.375	0.107	-1.313	-1.778	-8.197
5.0		0.058	-0.204	-1.813	-1.705	-5.512
10.0		-0.116	-0.174	-1.837	-2.024	-3.860
15.0		-0.448	-0.830	-1.784	-2.219	-2.837
24.0		-1.009	-0.900	-2.049	-2.868	-2.895
33.0		-1.183	-1.243	-2.188	-2.978	-3.013
54.0		-0.979	-1.262	-3.215	-0.754	-3.282
65.0		-0.728	-2.078	-3.729	-4.342	-3.978
78.5		-0.887	-8.355	-8.587	-9.307	-11.527
79.5		-324.267	-295.005	-260.724	-228.498	-133.796
80.5		-15.595	-14.603	-20.807	-41.072	-0.789
81.5		-4.536	-1.701	-3.958	-12.408	-21.542
82.0		10.830	-0.576	18.145	-6.899	-9.174
84.0		-11.685	-8.134	-10.941	-8.308	-6.778
87.0		1.200	-9.811	-1.491	-4.603	-2.507
89.0		-1.068	-3.387	-13.085	-4.911	-1.843
93.0		-0.720	-3.705	-0.981	-8.249	-0.681
96.0		-2.007	-3.713	0.728	0.002	-8.474
100.0		-2.501	-2.374	-2.942	-3.846	-3.846
2.5	(LOWER)	-1.091	-1.419	-1.811	-1.042	-0.091
5.0		-1.788	-1.198	-1.395	-0.885	0.146
10.0		-1.292	-1.188	-1.686	-0.807	0.117
24.0		-1.282	-1.558	-1.284	-0.884	0.089
33.0		-1.373	-1.490	-1.001	-0.257	-0.480
54.0		0.056	-0.635	-0.083	-1.781	-3.108
73.5		-2.109	-0.112	0.448	-0.867	-0.070
84.0		0.387	0.808	-0.571	1.245	0.478
96.0		0.831	0.913	1.081	0.863	0.045

WING PRESSURE COEFFICIENTS

RUN 248 POINT 2 ALPHA 0.00 PSI 0.00 HEIGHT 88.51

X/C, %		BP 2	BP 6	BP 12	BP 16	BP 22
0.0	(UPPER)	-1.919	-2.808	-2.700	-0.175	-0.182
2.5		0.305	1.007	1.777	0.100	-1.148
5.0		-0.028	0.481	0.451	-0.284	-0.812
10.0		0.130	0.982	-0.050	-1.053	-1.551
15.0		-0.452	-0.285	0.288	-1.270	-0.578
24.0		-1.197	-0.258	-0.191	-1.878	-1.337
33.0		-1.292	-0.875	-0.158	-1.725	-1.944
54.0		-2.203	-3.145	-1.834	-2.203	-1.256
85.0		-0.972	-2.037	-2.474	-2.318	-1.516
78.5		-1.153	-7.150	-8.296	-7.854	-7.285
79.5		-838.312	-572.043	-483.268	-429.872	-237.024
80.5		-24.083	-21.221	-31.632	-88.880	-1.193
81.5		-2.957	-3.711	2.053	-12.399	-24.099
82.0		27.150	5.316	44.771	-2.742	-1.806
84.0		-18.328	-10.534	-14.059	-5.988	0.619
87.0		8.262	-15.040	3.480	-0.512	6.888
89.0		1.228	-2.431	-18.801	-1.480	7.470
93.0		0.987	-3.707	3.560	-9.901	-0.733
96.0		-2.278	-4.108	6.787	5.202	-7.411
100.0		-8.312	-8.368	-8.182	-7.877	-8.648
2.5	(LOWER)	-2.972	-2.216	-4.389	-3.979	-0.359
5.0		-3.000	-1.900	-3.298	-2.828	-0.763
10.0		-2.104	-1.885	-3.836	-1.937	-0.972
24.0		-3.223	-2.840	-3.812	-2.140	-0.832
33.0		-2.289	-3.104	-2.843	-1.547	-0.403
54.0		-1.132	-2.557	-1.481	-4.258	-6.913
73.5		-4.828	-1.204	-0.887	-2.349	-0.779
84.0		0.174	0.105	-0.584	0.197	-0.011
96.0		0.045	-0.204	-0.221	-0.484	-0.577

RUN 248 POINT 4 ALPHA 3.99 PSI 0.00 HEIGHT 87.44

X/C, %		BP 2	BP 6	BP 12	BP 16	BP 22
0.0	(UPPER)	-1.830	-2.375	-1.781	0.455	-1.342
2.5		0.340	0.843	2.580	-0.181	-2.104
5.0		0.045	0.444	0.805	-0.841	-1.295
10.0		0.088	0.815	0.126	-1.358	-1.825
15.0		-0.187	-0.285	0.077	-1.520	-0.889
24.0		-0.806	-0.372	-0.422	-1.770	-1.462
33.0		-1.002	-0.790	-0.378	-1.804	-2.008
54.0		-2.154	-2.485	-1.854	-1.578	-1.424
65.0		-0.925	-1.972	-2.475	-2.436	-1.880
78.5		-1.078	-8.841	-9.022	-8.818	-7.275
79.5		-583.505	-525.232	-492.623	-487.551	-218.348
80.5		-22.333	-19.978	-31.051	-83.051	-1.043
81.5		-2.830	-2.889	0.080	-12.551	-22.536
82.0		24.739	4.504	39.855	-3.441	-2.204
84.0		-17.428	-9.826	-14.145	-6.093	-0.872
87.0		5.388	-13.949	2.420	-1.074	5.830
89.0		0.955	-2.325	-18.052	-1.880	6.428
93.0		0.732	-3.483	3.075	-9.558	-0.751
96.0		-2.235	-3.805	6.196	4.496	-7.188
100.0		-7.109	-6.984	-6.768	-6.874	-5.905
2.5	(LOWER)	-2.529	-2.104	-4.010	-3.704	0.133
5.0		-2.824	-1.830	-3.098	-2.752	-0.364
10.0		-1.911	-1.752	-3.415	-1.943	-0.882
24.0		-2.888	-2.493	-3.084	-2.168	-0.595
33.0		-2.280	-2.878	-2.851	-1.578	-0.475
54.0		-1.317	-2.584	-1.551	-3.514	-5.933
73.5		-3.865	-1.388	-0.750	-1.721	-0.804
84.0		-0.012	-0.200	-0.601	0.223	0.093
96.0		-0.073	-0.298	-0.138	-0.230	-0.433

WING PRESSURE COEFFICIENTS

RUN 248 POINT 8 ALPHA 8.00 PSI 0.00 HEIGHT 87.32

X/C, %		BP 2	BP 6	BP 12	BP 16	BP 22
0.0	(UPPER)	-1.577	-2.177	-2.428	-1.350	-2.710
2.5		0.414	0.700	1.833	-0.410	-3.044
5.0		0.077	0.427	0.872	-0.717	-1.830
10.0		0.187	0.654	0.437	-1.357	-2.130
15.0		-0.287	-0.151	0.158	-1.575	-1.280
24.0		-0.788	-0.400	-0.404	-1.872	-1.873
33.0		-0.991	-0.717	-0.532	-1.841	-2.007
54.0		-1.883	-2.122	-1.975	-1.151	-1.628
65.0		-0.904	-1.949	-2.640	-2.643	-1.060
78.5		-1.004	-8.783	-9.275	-8.783	-7.087
79.5		-584.000	-526.246	-454.787	-398.637	-219.145
80.5		-21.946	-20.304	-30.949	-83.275	-1.003
81.5		-2.195	-2.385	-0.172	-12.920	-22.993
82.0		25.036	4.257	39.428	-3.953	-2.368
84.0		-16.813	-9.906	-14.862	-6.435	-0.481
87.0		5.919	-14.101	2.413	-1.285	5.497
89.0		1.205	-2.286	-10.867	-2.140	5.130
93.0		1.078	-3.730	3.101	-9.859	-0.722
96.0		-1.850	-4.141	6.242	4.254	-7.585
100.0		-5.338	-5.498	-6.585	-6.500	-5.896
2.5	(LOWER)	-2.344	-1.913	-2.787	-3.412	0.212
5.0		-2.383	-1.837	-2.114	-2.817	-0.309
10.0		-1.788	-1.882	-2.550	-2.273	-0.707
24.0		-2.593	-2.081	-2.514	-2.855	-0.700
33.0		-1.878	-2.483	-2.741	-2.248	-0.465
54.0		-1.847	-2.900	-2.438	-3.194	-5.558
73.5		-3.588	-2.028	-1.384	-1.319	-0.530
84.0		-0.308	-0.780	-0.583	0.182	0.213
96.0		-0.332	-0.515	-0.336	-0.238	-0.258

RUN 248 POINT 8 ALPHA 11.98 PSI 0.00 HEIGHT 87.33

X/C, %		BP 2	BP 6	BP 12	BP 16	BP 22
0.0	(UPPER)	-1.592	-2.188	-2.641	-3.291	-1.831
2.5		0.385	0.884	0.458	-1.257	-2.824
5.0		0.129	0.422	-0.077	-1.254	-1.966
10.0		0.128	0.821	0.002	-1.726	-2.283
15.0		-0.146	-0.114	0.058	-1.980	-1.462
24.0		-0.794	-0.323	-0.443	-2.338	-1.849
33.0		-0.938	-0.878	-0.557	-2.488	-2.380
54.0		-1.475	-1.848	-1.832	-0.725	-2.025
65.0		-0.781	-1.886	-2.498	-2.951	-2.501
78.5		-8.017	-8.830	-8.406	-8.538	-8.188
79.5		-583.055	-526.319	-450.014	-398.139	-222.768
80.5		-21.978	-20.435	-30.022	-83.318	-1.037
81.5		-2.593	-2.238	0.523	-13.007	-25.014
82.0		25.203	4.079	40.145	-4.299	-6.013
84.0		-18.732	-10.014	-14.748	-7.043	-1.775
87.0		6.014	-14.225	2.748	-1.432	4.343
89.0		1.385	-2.200	-10.370	-2.079	4.867
93.0		1.388	-3.826	3.235	-0.377	-0.818
96.0		-1.551	-4.272	6.234	4.415	-0.761
100.0		-6.202	-6.172	-5.505	-6.312	-5.883
2.5	(LOWER)	-2.385	-1.682	-2.720	-3.172	-0.120
5.0		-2.401	-1.888	-2.023	-2.898	-0.590
10.0		-1.702	-1.872	-2.498	-2.549	-0.875
24.0		-2.578	-2.188	-2.448	-2.883	-0.828
33.0		-1.881	-2.517	-2.874	-2.567	-6.384
54.0		-1.886	-2.614	-2.337	-3.088	-5.117
73.5		-3.071	-1.900	-1.387	-0.838	-0.229
84.0		-0.314	-0.783	-0.498	0.470	0.541
96.0		-0.800	-0.454	0.024	0.177	-0.001

WING PRESSURE COEFFICIENTS

RUN 248 POINT 13 ALPHA 21.98 PSI 0.00 HEIGHT 98.98

X/C, %		BP 2	BP 6	BP 12	BP 16	BP 22
0.0	(UPPER)	-2.088	-2.800	-2.788	-3.905	-5.110
2.5		0.148	0.130	-2.103	-3.063	-4.404
5.0		-0.102	-0.118	-2.568	-3.183	-3.340
10.0		-0.111	[illegible]	-2.182	-3.885	-3.288
15.0		-0.955	-0.621	-1.928	-3.953	-2.575
24.0		-1.226	-0.877	-2.105	-4.379	-3.021
33.0		-1.298	-1.104	-2.078	-4.708	-3.715
54.0		-0.524	-0.849	-3.062	0.082	-3.841
65.0		-1.008	-2.206	-3.548	-5.195	-4.832
78.5		-1.200	-7.488	-8.817	-11.561	-14.881
79.5		-638.307	-575.759	-492.813	-420.790	-251.685
80.5		-24.320	-22.874	-33.787	-71.727	-1.451
81.5		-3.191	-1.595	-0.496	-17.142	-33.032
82.0		27.561	3.812	42.580	-7.814	-8.781
84.0		-18.858	-11.261	-18.058	-10.241	-7.825
87.0		5.817	-16.257	1.962	-3.807	-0.756
89.0		0.927	-3.382	-20.834	-4.608	6.430
93.0		0.944	-4.021	2.329	-12.217	-8.848
96.0		-2.119	-5.382	5.376	3.077	-14.036
100.0		-4.458	-4.812	-6.443	-7.581	-6.756
2.5	(LOWER)	-2.815	-2.538	-3.292	-3.508	0.188
5.0		-2.934	-2.300	-2.478	-3.318	-0.106
10.0		-2.302	-2.148	-3.080	-2.803	-0.388
24.0		-3.313	-2.717	-2.[illegible]38	-2.870	-0.284
33.0		-2.487	-3.075	-2.918	-1.863	-0.708
54.0		-1.280	-2.848	-1.454	-2.767	-4.383
73.5		-2.222	-1.440	-0.262	0.017	-0.182
84.0		-0.918	-0.275	-0.841	1.247	0.505
96.0		-0.380	0.235	0.840	0.738	-0.008

RUN 256 POINT 3 ALPHA 0.03 PSI 0.00 HEIGHT 88.29

X/C, %		BP 2	BP 6	BP 12	BP 16	BP 22
0.0	(UPPER)	0.582	0.526	0.510	0.501	0.504
2.5		-0.114	-0.195	-0.242	-0.248	-0.178
5.0		-0.149	-0.203	-0.250	-0.255	-0.248
10.0		-0.188	-0.251	-0.277	-0.291	-0.271
15.0		-0.206	-0.266	-0.271	-0.237	-0.247
24.0		-0.223	-0.218	-0.345	-0.278	-0.247
33.0		-0.192	-0.214	-0.250	-0.265	-0.220
54.0		-0.050	0.004	-0.305	0.000	-0.273
65.0		0.001	-0.380	-0.442	-0.436	-0.370
78.5		0.085	-1.039	-1.081	-1.067	-1.056
79.5		-1.290	-1.261	-1.286	-1.223	-1.356
80.5		-0.837	-1.088	-1.141	-1.205	0.114
81.5		-0.953	-0.137	-0.000	-0.[illegible]	-1.182
82.0		-0.544	-0.855	-0.888	-0.788	-0.890
84.0		-0.534	-0.818	-0.831	-0.866	-0.871
87.0		-0.438	-0.563	-0.534	-0.530	-0.553
89.0		-0.330	-0.374	-0.422	-0.483	-0.483
93.0		-0.224	-0.308	-0.243	-0.391	0.090
96.0		-0.150	-0.104	-0.134	-0.183	-0.298
100.0		-0.055	0.008	-0.027	-0.038	-0.128
2.5	(LOWER)	0.022	0.015	0.027	0.024	-0.014
5.0		-0.002	-0.012	0.003	0.000	-0.041
10.0		-0.006	0.001	-0.015	-0.015	-0.002
24.0		-0.023	-0.041	-0.018	-0.044	-0.050
33.0		-0.028	0.000	0.005	0.014	0.093
54.0		0.000	0.058	0.070	-0.054	-0.058
73.5		0.039	0.277	0.357	0.057	0.320
84.0		0.368	0.456	0.484	0.470	0.415
96.0		0.233	0.290	0.300	0.298	0.237

WING PRESSURE COEFFICIENTS

RUN 256 POINT 5 ALPHA 4.05 PSI 0.00 HEIGHT 87.50

X/C. %		BP 2	BP 6	BP 12	BP 16	BP 22
0.0	(UPPER)	0.174	-0.157	-0.430	-0.543	-0.500
2.5		-0.531	-0.707	-0.809	-0.894	-0.904
5.0		-0.643	-0.570	-0.603	-0.668	-0.733
10.0		-0.424	-0.466	-0.557	-0.602	-0.578
15.0		-0.367	-0.449	-0.478	-0.525	-0.478
24.0		-0.347	-0.358	-0.394	-0.448	-0.498
33.0		-0.295	-0.316	-0.353	-0.382	-0.381
54.0		-0.073	0.111	-0.378	0.339	-0.370
65.0		0.084	-0.426	-0.492	-0.496	-0.454
78.5		0.078	-1.017	-1.070	-1.082	-1.182
79.5		-1.228	-1.231	-1.249	-1.205	-1.427
80.5		-0.801	-1.006	-1.006	-1.182	0.111
81.5		-0.552	-0.154	-0.770	-0.802	-1.232
82.0		-0.542	-0.820	-0.808	-0.761	-1.118
84.0		-0.521	-0.588	-0.588	-0.800	-0.876
87.0		-0.418	-0.444	-0.485	-0.518	-0.711
89.0		-0.307	-0.332	-0.379	-0.433	-0.625
93.0		-0.211	-0.178	-0.225	-0.281	0.088
96.0		-0.141	-0.092	-0.151	-0.189	-0.397
100.0		-0.058	-0.033	-0.004	-0.125	-0.226
2.5	(LOWER)	0.311	0.324	0.359	0.372	0.364
5.0		0.221	0.188	0.268	0.272	0.245
10.0		0.182	0.244	0.175	0.188	0.130
24.0		0.071	0.062	0.087	0.082	0.031
33.0		0.058	0.082	0.083	0.092	0.081
54.0		0.111	0.003	0.102	-0.064	-0.081
73.5		0.030	0.289	0.364	0.058	0.289
84.0		0.396	0.489	0.081	0.470	0.380
96.0		0.250	0.288	0.288	0.266	0.203

RUN 256 POINT 7 ALPHA 8.00 PSI 0.00 HEIGHT 87.44

X/C. %		BP 2	BP 6	BP 12	BP 16	BP 22
0.0	(UPPER)	-0.884	-1.815	-2.848	-3.038	-3.209
2.5		-0.983	-1.268	-1.804	-1.768	-1.888
5.0		-0.759	-0.952	-1.158	-1.274	-1.361
10.0		-0.848	-0.780	-0.887	-0.900	-0.988
15.0		-0.561	-0.854	-0.725	-0.799	-0.782
24.0		-0.480	-0.490	-0.556	-0.636	-0.606
33.0		-0.387	-0.414	-0.473	-0.523	-0.519
54.0		-0.093	0.136	-0.448	0.072	-0.510
65.0		0.081	-0.481	-0.542	-0.583	-0.587
78.5		0.072	-1.014	-1.075	-1.079	-1.255
79.5		-1.221	-1.233	-1.258	-1.271	-1.808
80.5		-0.811	-0.915	-1.038	-1.128	0.110
81.5		-0.552	-0.138	-0.728	-0.840	-1.408
82.0		-0.548	-0.583	-0.845	-0.738	-1.281
84.0		-0.512	-0.570	-0.587	-0.863	-1.025
87.0		-0.412	-0.428	-0.472	-0.514	-0.845
89.0		-0.302	-0.314	-0.381	-0.424	-0.754
93.0		-0.215	-0.173	-0.225	-0.268	0.087
96.0		-0.145	-0.095	-0.188	-0.223	-0.471
100.0		-0.054	-0.052	-0.112	-0.179	-0.341
2.5	(LOWER)	0.518	0.520	0.531	0.524	0.519
5.0		0.398	0.328	0.455	0.458	0.431
10.0		0.318	0.432	0.338	0.358	0.288
24.0		0.175	0.178	0.187	0.171	0.108
33.0		0.143	0.187	0.187	0.179	0.088
54.0		0.187	0.143	0.142	-0.077	-0.094
73.5		0.018	0.304	0.374	0.064	0.254
84.0		0.424	0.487	0.088	0.484	0.360
96.0		0.274	0.293	0.294	0.248	0.153

WING PRESSURE COEFFICIENTS

RUN 256 POINT 9 ALPHA 12.00 PSI 0.00 HEIGHT 87.20

X/C. %		BP 2	BP 6	BP 12	BP 16	BP 22
0.0	(UPPER)	-2.504	-4.442	-0.225	-2.836	-1.456
2.5		-1.548	-1.987	-2.045	-2.423	-1.277
5.0		-1.129	-1.426	-1.846	-2.340	-1.243
10.0		-0.806	-1.056	-1.314	-2.258	-1.290
15.0		-0.763	-0.883	-1.042	-2.008	-1.191
24.0		-0.818	-0.857	-0.777	-1.237	-1.184
33.0		-0.483	-0.546	-0.636	-0.888	-1.092
54.0		-0.106	0.182	-0.529	0.075	-0.944
65.0		0.077	-0.502	-0.583	-0.481	-0.830
78.5		0.008	-1.005	-1.002	-1.041	-1.291
79.5		-1.188	-1.172	-1.256	-1.122	-1.488
80.5		-0.984	-0.895	-0.833	-1.143	0.194
81.5		-0.858	-0.137	-0.509	-0.808	-1.250
82.0		-0.800	-0.837	-0.357	-0.787	-1.272
84.0		-0.538	-0.501	-0.486	-0.850	-1.218
87.0		-0.437	-0.495	-0.381	-0.552	-1.125
89.0		-0.321	-0.349	-0.275	-0.490	-1.084
93.0		-0.234	-0.209	-0.251	-0.308	0.082
96.0		-0.150	-0.123	-0.247	-0.245	-0.840
100.0		-0.058	-0.060	-0.150	-0.137	-0.700
2.5	(LOWER)	0.605	0.584	0.548	0.582	0.523
5.0		0.557	0.480	0.500	0.500	0.475
10.0		0.485	0.564	0.478	0.481	0.350
24.0		0.283	0.309	0.311	0.298	0.158
33.0		0.241	0.255	0.257	0.256	0.080
54.0		0.227	0.201	0.188	-0.102	-0.099
73.5		0.029	0.328	0.398	0.046	0.246
84.0		0.463	0.510	0.484	0.470	0.327
96.0		0.396	0.311	0.295	0.267	0.042

RUN 256 POINT 14 ALPHA 22.00 PSI 0.00 HEIGHT 90.11

X/C. %		BP 2	BP 6	BP 12	BP 16	BP 22
0.0	(UPPER)	-1.700	-1.443	-1.184	-1.100	-0.514
2.5		-1.812	-1.407	-1.158	-1.066	-0.887
5.0		-1.060	-1.410	-1.179	-1.058	-0.874
10.0		-1.540	-1.395	-1.151	-1.082	-0.902
15.0		-1.485	-1.390	-1.130	-1.052	-0.857
24.0		-1.268	-1.295	-1.115	-1.090	-0.863
33.0		-1.083	-1.208	-1.101	-1.028	-0.880
54.0		-0.527	-1.017	-1.000	0.129	-0.885
65.0		0.030	-0.911	-1.015	-0.968	-0.830
78.5		0.022	-0.843	-0.938	-0.950	-0.870
79.5		-0.872	-0.800	-0.915	-0.887	-0.885
80.5		-0.824	-0.782	-0.916	-0.923	0.047
81.5		-0.757	-0.122	-0.878	-0.817	-0.868
82.0		-0.751	-0.724	-0.834	-0.877	-0.872
84.0		-0.861	-0.752	-0.771	-0.928	-0.843
87.0		-0.805	-0.808	-0.843	-0.888	-0.823
89.0		-0.515	-0.827	-0.780	-0.861	-0.836
93.0		-0.442	-0.555	-0.787	-0.857	0.022
96.0		-0.378	-0.480	-0.752	-0.838	-0.808
100.0		-0.279	-0.403	-0.809	-0.817	-0.829
2.5	(LOWER)	0.708	0.828	0.564	0.511	0.456
5.0		0.774	0.842	0.842	0.503	0.590
10.0		0.685	0.804	0.590	0.571	0.442
24.0		0.448	0.454	0.439	0.380	0.270
33.0		0.390	0.380	0.368	0.355	0.040
54.0		0.303	0.266	0.219	-0.127	-0.089
73.5		-0.082	0.326	0.380	0.048	0.731
84.0		0.480	0.507	0.039	0.411	0.294
96.0		0.248	0.220	0.118	0.038	-0.024

WING PRESSURE COEFFICIENTS

RUN 257 POINT 2 ALPHA -0.04 PSI 0.00 HEIGHT 87.40

X/C. %		BP 2	BP 6	BP 12	BP 16	BP 22
0.0	(UPPER)	0.563	0.445	0.373	0.313	0.300
2.5		-0.312	-0.314	-0.411	-0.461	-0.447
5.0		-0.240	-0.313	-0.406	-0.422	-0.442
10.0		-0.292	-0.340	-0.387	-0.447	-0.454
15.0		-0.304	-0.363	-0.372	-0.434	-0.384
24.0		-0.344	-0.315	-0.350	-0.441	-0.383
33.0		-0.299	-0.326	-0.377	-0.422	-0.386
54.0		-0.257	-0.421	-0.502	-0.614	-0.484
65.0		0.042	-0.057	-0.726	-0.721	-0.614
78.5		0.029	-1.805	-1.806	-1.784	-1.798
79.5		-17.307	-26.050	-34.572	-30.858	-23.038
80.5		8.901	5.056	8.721	0.805	0.053
81.5		-1.626	-0.005	-4.758	-3.068	-2.078
82.0		1.574	-0.864	2.249	-1.302	-0.613
84.0		-2.371	-1.098	-2.415	-1.558	-0.729
87.0		0.763	-1.819	-0.247	-0.843	0.118
88.0		-0.434	-0.827	-3.168	-1.304	0.303
93.0		-0.492	-0.285	-0.051	-1.162	0.045
96.0		-0.258	-0.517	0.400	0.452	-1.152
100.0		-0.952	-0.851	-0.827	-0.786	-0.735
2.5	(LOWER)	0.053	0.071	0.096	0.101	0.113
5.0		0.009	0.031	0.062	0.061	0.038
10.0		0.022	0.054	0.016	0.035	-0.026
24.0		-0.014	-0.018	0.004	-0.039	-0.038
33.0		-0.040	0.024	0.021	0.026	0.057
54.0		0.095	0.081	0.074	-0.127	-0.587
73.5		-0.026	0.270	0.364	0.018	0.275
84.0		0.366	0.482	0.058	0.473	0.377
96.0		0.249	0.291	0.330	0.302	0.195

RUN 257 POINT 4 ALPHA 4.03 PSI 0.00 HEIGHT 87.00

X/C. %		BP 2	BP 6	BP 12	BP 16	BP 22
0.0	(UPPER)	-0.606	-0.501	-0.882	-1.286	-1.543
2.5		-0.873	-0.946	-1.280	-1.147	-1.376
5.0		-0.568	-0.876	-0.857	-0.942	-1.024
10.0		-0.519	-0.809	-0.727	-0.806	-0.832
15.0		-0.487	-0.587	-0.626	-0.712	-0.666
24.0		-0.481	-0.468	-0.533	-0.637	-0.601
33.0		-0.419	-0.449	-0.511	-0.563	-0.558
54.0		-0.202	-0.508	-0.806	0.023	-0.618
65.0		0.045	-0.729	-0.816	-0.834	-0.770
78.5		0.032	-1.731	-1.905	-1.910	-2.040
79.5		-17.366	-26.144	-38.729	-31.106	-23.501
80.5		8.875	5.810	9.009	1.181	0.054
81.5		-1.829	-0.605	-4.989	-3.388	-2.032
82.0		1.575	-0.919	2.251	-1.357	-0.849
84.0		-2.404	-1.746	-2.482	-1.858	-0.868
87.0		0.780	-1.864	-0.316	-0.929	-0.104
88.0		-0.433	-0.860	-3.234	-1.403	0.101
93.0		-0.412	-0.312	-0.101	-1.253	0.048
96.0		-0.377	-0.537	0.355	0.374	-1.370
100.0		-0.817	-0.829	-0.825	-0.705	-0.844
2.5	(LOWER)	0.336	0.370	0.404	0.413	0.433
5.0		0.232	0.212	0.325	0.324	0.305
10.0		0.187	0.295	0.212	0.244	0.187
24.0		0.088	0.098	0.120	0.081	0.044
33.0		0.078	0.105	0.108	0.118	0.058
54.0		0.149	0.114	0.122	-0.138	-0.614
73.5		0.032	0.288	0.387	0.026	0.234
84.0		0.413	0.490	0.068	0.488	0.345
96.0		0.289	0.319	0.352	0.308	0.151

WING PRESSURE COEFFICIENTS

RUN 257 POINT 6 ALPHA 8.01 PSI 0.00 HEIGHT 87.43

X/C. %		BP 2	BP 6	BP 12	BP 16	BP 22
0.0	(UPPER)	-1.298	-2.421	-3.071	-0.098	-1.988
2.5		-1.115	-1.488	-1.942	-2.537	-1.648
5.0		-0.882	-1.118	-1.421	-1.804	-1.571
10.0		-0.750	-0.888	-1.007	-1.217	-1.575
15.0		-0.806	-0.787	-0.883	-1.022	-1.416
24.0		-0.811	-0.613	-0.721	-0.858	-1.121
33.0		-0.513	-0.595	-0.851	-0.730	-0.843
54.0		-0.175	-0.567	-0.883	0.008	-0.787
65.0		0.054	-0.772	-0.887	-0.825	-0.837
78.5		0.041	-1.754	-1.983	-1.992	-2.197
79.5		-17.100	-25.831	-38.470	-31.014	-23.638
80.5		9.000	8.310	9.250	1.804	0.060
81.5		-1.543	-0.800	-5.288	-3.077	-3.183
82.0		1.508	-1.035	2.204	-1.354	-1.143
84.0		-2.350	-1.744	-2.515	-1.783	-1.204
87.0		0.806	-1.854	-0.348	-1.023	-0.434
88.0		-0.407	-0.882	-3.250	-1.473	-0.243
93.0		-0.381	-0.317	-0.127	-1.314	0.083
96.0		-0.338	-0.542	0.326	0.318	-1.722
100.0		-0.878	-0.783	-0.783	-0.782	-0.856
2.5	(LOWER)	0.533	0.533	0.531	0.510	0.512
5.0		0.417	0.374	0.487	0.488	0.428
10.0		0.354	0.473	0.374	0.496	0.284
24.0		0.304	0.218	0.238	0.196	0.112
33.0		0.175	0.198	0.203	0.207	0.070
54.0		0.213	0.176	0.173	-0.132	-0.829
73.5		-0.034	0.226	0.413	0.046	0.268
84.0		0.453	0.522	0.072	0.481	0.301
96.0		0.334	0.354	0.374	0.315	0.118

RUN 257 POINT 8 ALPHA 12.02 PSI 0.00 HEIGHT 88.37

X/C. %		BP 2	BP 6	BP 12	BP 16	BP 22
0.0	(UPPER)	-3.188	-5.435	-5.898	-3.418	-1.813
2.5		-1.782	-2.348	-2.880	-3.278	-1.741
5.0		-1.331	-1.726	-2.151	-3.326	-1.863
10.0		-1.076	-1.304	-1.816	-2.252	-1.760
15.0		-0.830	-1.127	-1.341	-2.564	-1.586
24.0		-0.802	-0.836	-1.085	-1.037	-1.552
33.0		-0.649	-0.723	-0.928	-0.792	-1.546
54.0		-0.199	-0.859	-0.845	0.021	-1.888
65.0		[illegible]	-0.831	-0.983	-0.910	-1.874
78.5		0.047	-1.775	-1.895	-2.019	-2.955
79.5		-18.975	-25.806	-38.544	-31.182	-24.870
80.5		9.590	7.003	8.588	2.007	0.060
81.5		-1.871	-0.886	-5.193	-3.805	-4.010
82.0		1.537	-1.138	2.373	-1.177	-2.192
84.0		-2.378	-1.798	-2.531	-1.831	-2.824
87.0		0.810	-1.873	-0.336	-1.115	-1.951
88.0		-0.413	-0.863	-3.250	-1.550	-1.482
93.0		-0.389	-0.334	-0.139	-1.386	0.054
96.0		-0.344	-0.566	0.278	0.275	-2.027
100.0		-0.857	-0.798	-0.763	-0.774	-1.054
2.5	(LOWER)	0.541	0.588	0.471	0.483	0.474
5.0		0.550	0.506	0.588	0.552	0.487
10.0		0.487	0.591	0.490	0.595	0.350
24.0		0.305	0.323	0.342	0.283	0.157
33.0		0.288	0.279	0.281	0.280	0.063
54.0		0.271	0.230	0.215	-0.390	-0.958
73.5		-0.050	0.352	0.434	-0.004	0.182
84.0		0.497	0.551	0.070	0.501	0.285
96.0		0.389	0.382	0.395	0.327	0.067

WING PRESSURE COEFFICIENTS

RUN 257 POINT 13 ALPHA 22.03 PSI 0.00 HEIGHT 90.23

X/C, %		BP 2	BP 6	BP 12	BP 16	BP 22
0.0	(UPPER)	-11.300	-8.153	-3.444	-2.783	-1.072
2.5		-4.380	-8.371	-3.500	-2.804	-1.954
5.0		-2.864	-6.838	-3.600	-2.870	-1.951
10.0		-2.143	-4.001	-3.838	-2.836	-2.052
15.0		-1.758	-2.187	-4.131	-2.870	-1.983
24.0		-1.342	-1.133	-3.027	-3.353	-2.010
33.0		-1.007	-0.941	-2.013	-3.456	-1.995
54.0		-0.287	-0.788	-0.002	0.043	-2.081
66.0		0.040	-0.832	-0.710	-1.741	-2.388
78.5		0.025	-1.936	-1.882	-1.710	-3.135
79.5		-17.124	-26.250	-30.248	-31.512	-25.263
80.5		8.707	7.950	10.054	1.006	0.037
81.5		-1.070	-0.681	-5.404	-3.478	-4.214
82.0		1.014	-1.318	3.006	-0.834	-2.835
84.0		-2.417	-2.011	-2.050	-1.734	-3.888
87.0		0.832	-2.006	-0.410	-1.101	-2.636
88.0		-0.433	-0.821	-3.500	-1.614	-1.900
93.0		-0.405	-0.471	-0.250	-1.537	0.044
96.0		-0.343	-0.707	0.235	0.050	-3.157
100.0		-0.770	-0.605	-0.777	-0.867	-1.235
2.5	(LOWER)	0.500	0.313	0.268	0.215	0.231
5.0		0.758	0.718	0.580	0.572	0.437
10.0		0.770	0.663	0.836	0.823	0.456
24.0		0.521	0.550	0.543	0.486	0.319
33.0		0.472	0.402	0.463	0.447	0.050
54.0		0.417	0.381	0.326	-0.521	-0.710
73.5		-0.008	0.423	0.456	-0.050	0.188
84.0		0.541	0.617	0.066	0.510	0.233
96.0		0.430	0.450	0.640	0.324	-0.013

RUN 256 POINT 2 ALPHA -0.02 PSI 0.00 HEIGHT 88.10

X/C, %		BP 2	BP 6	BP 12	BP 16	BP 22
0.0	(UPPER)	0.542	0.384	0.270	0.145	0.150
2.5		-0.203	-0.388	-0.457	-0.546	-0.500
5.0		-0.331	-0.388	-0.500	-0.494	-0.514
10.0		-0.351	-0.381	-0.446	-0.530	-0.502
15.0		-0.380	-0.494	-0.416	-0.530	-0.445
24.0		-0.477	-0.388	-0.414	-0.500	-0.502
33.0		-0.388	-0.403	-0.495	-0.529	-0.502
54.0		-0.608	-0.519	-0.626	-0.060	-0.506
66.0		-0.634	-0.700	-0.000	-0.000	-0.744
78.5		-0.058	-2.005	-2.395	-2.210	-2.148
79.5		-33.307	-50.055	-75.848	-80.282	-44.706
80.5		10.700	11.514	17.024	0.000	-0.040
81.5		-2.323	-2.110	-7.136	-4.450	-3.076
82.0		3.873	-0.387	5.922	-1.407	0.010
84.0		-3.005	-2.476	-3.036	-2.071	-0.383
87.0		2.254	-2.819	0.271	-0.007	1.003
88.0		-0.249	-0.572	-5.387	-1.732	1.337
93.0		-0.388	-0.136	0.306	-1.088	-0.022
96.0		-0.370	-0.703	1.070	1.260	-1.043
100.0		-1.834	-1.724	-1.886	-1.838	-1.424
2.5	(LOWER)	0.011	0.000	0.070	0.061	0.110
5.0		-0.043	0.020	0.070	0.020	0.016
10.0		0.011	0.058	-0.007	0.032	-0.076
24.0		-0.049	-0.048	-0.015	-0.112	-0.074
33.0		-0.051	-0.010	-0.027	-0.021	-0.092
54.0		0.082	0.004	0.000	-0.242	-2.230
73.5		-0.092	0.201	0.300	-0.025	0.203
84.0		0.301	0.307	0.001	0.418	0.310
96.0		0.206	0.184	0.248	0.172	0.072

WING PRESSURE COEFFICIENTS

RUN 258 POINT 4 ALPHA 4.02 PSI 0.00 HEIGHT 88.30

X/C, %		BP 2	BP 6	BP 12	BP 16	BP 22
0.0	(UPPER)	-0.066	-0.081	-1.107	-1.505	-1.081
2.5		-0.747	-1.062	-1.400	-1.250	-1.900
5.0		-0.673	-0.700	-0.002	-1.047	-1.132
10.0		-0.002	-0.083	-0.700	-0.027	-0.005
15.0		-0.561	-0.735	-0.000	-0.836	-0.701
24.0		-0.027	-0.543	-0.029	-0.700	-0.722
33.0		-0.512	-0.537	-0.023	-0.002	-0.000
54.0		-0.457	-0.021	-0.764	-0.006	-0.777
66.0		-0.640	-0.906	-1.010	-1.020	-0.021
78.5		-0.063	-2.214	-2.490	-2.404	-2.900
79.5		-33.005	-51.007	-77.451	-81.734	-65.122
80.5		20.273	12.520	18.004	1.744	-0.053
81.5		-2.340	-2.161	-8.196	-5.046	-4.303
82.0		3.062	-0.476	5.771	-1.424	-0.237
84.0		-3.034	-2.403	-3.787	-2.267	-0.040
87.0		2.301	-2.025	0.231	-0.036	0.005
88.0		-0.278	-0.029	-5.500	-1.000	1.154
93.0		-0.407	-0.192	0.340	-1.639	-0.033
96.0		-0.410	-0.750	1.031	1.207	-1.002
100.0		-1.045	-1.735	-1.742	-1.715	-1.500
2.5	(LOWER)	0.200	0.347	0.345	0.336	0.407
5.0		0.182	0.203	0.200	0.266	0.263
10.0		0.182	0.281	0.174	0.218	0.100
24.0		0.042	0.000	0.001	-0.004	-0.004
33.0		0.020	0.057	0.040	0.000	-0.000
54.0		0.190	0.040	0.040	-0.207	-2.201
73.5		-0.115	0.221	0.319	-0.021	0.143
84.0		0.326	0.410	-0.006	0.420	0.204
96.0		0.237	0.200	0.204	0.172	0.013

RUN 256 POINT 6 ALPHA 8.03 PSI 0.00 HEIGHT 87.17

X/C, %		BP 2	BP 6	BP 12	BP 16	BP 22
0.0	(UPPER)	-1.323	-3.040	-4.000	-3.007	-2.000
2.5		-1.182	-1.563	-2.000	-3.100	-1.050
5.0		-0.005	-1.200	-1.500	-2.005	-1.900
10.0		-0.053	-0.074	-1.100	-1.314	-1.017
15.0		-0.700	-0.945	-0.970	-0.970	-1.051
24.0		-0.702	-0.000	-0.010	-0.951	-1.301
33.0		-0.000	-0.001	-0.771	-0.010	-1.121
54.0		-0.340	-0.702	-0.040	-0.024	-0.900
66.0		-0.027	-0.951	-1.005	-1.000	-1.116
78.5		-0.040	-2.230	-2.513	-2.470	-2.703
79.5		-33.300	-51.174	-78.533	-81.100	-65.000
80.5		20.140	12.024	18.344	2.407	-0.025
81.5		-2.353	-2.135	-5.400	-5.374	-4.953
82.0		3.002	-0.031	5.002	-1.457	-0.302
84.0		-3.597	-2.400	-3.010	-2.300	-1.031
87.0		2.340	-2.000	0.200	-1.015	0.006
88.0		-0.257	-0.047	-5.547	-1.040	0.741
93.0		-0.303	-0.210	0.203	-1.000	-0.005
96.0		-0.402	-0.703	0.074	1.130	-2.319
100.0		-1.702	-1.074	-1.053	-1.000	-1.505
2.5	(LOWER)	0.402	0.400	0.400	0.435	0.402
5.0		0.352	0.361	0.452	0.431	0.372
10.0		0.324	0.459	0.329	0.372	0.217
24.0		0.151	0.183	0.213	0.116	0.001
33.0		0.123	0.154	0.147	0.156	0.004
54.0		0.165	0.109	0.004	-0.270	-2.343
73.5		-0.100	0.253	0.337	-0.014	0.135
84.0		0.377	0.454	0.000	0.440	0.218
96.0		0.232	0.250	0.291	0.187	-0.010

WING PRESSURE COEFFICIENTS

RUN 250 POINT 8 ALPHA 12.02 PSI 0.00 HEIGHT 00.23

X/C, %		DP 2	DP 6	DP 12	DP 16	DP 22
0.0	(UPPER)	-3.200	-4.030	-3.560	-2.707	-1.063
2.5		-1.080	-4.305	-2.080	-2.543	-1.700
5.0		-1.495	-2.874	-2.090	-2.543	-1.712
10.0		-1.201	-1.606	-2.317	-2.617	-1.700
15.0		-1.037	-1.120	-1.012	-2.577	-1.645
24.0		-0.986	-0.860	-1.250	-2.200	-1.054
33.0		-0.751	-0.777	-1.023	-1.587	-1.504
54.0		-0.340	-0.705	-0.904	-0.605	-1.671
65.0		-0.022	-1.011	-1.103	-1.041	-1.879
78.5		-0.050	-2.253	-2.412	-2.225	-3.464
79.5		-23.751	-51.700	-77.346	-61.000	-47.300
80.5		20.417	13.100	10.543	1.057	-0.056
81.5		-2.384	-2.175	-8.952	-5.044	-5.440
82.0		3.050	-0.705	5.505	-1.382	-1.055
84.0		-3.050	-2.605	-3.053	-2.250	-2.741
87.0		2.301	-3.005	0.295	-0.957	-1.552
90.0		-0.253	-0.003	-5.577	-1.870	-1.000
93.0		-0.374	-0.247	0.317	-1.051	-0.024
96.0		-0.371	-0.820	0.002	1.195	-2.044
100.0		-1.782	-1.044	-1.021	-1.078	-1.772
2.5	(LOWER)	0.500	0.536	0.495	0.404	0.417
5.0		0.503	0.400	0.530	0.402	0.404
10.0		0.473	0.573	0.444	0.457	0.275
24.0		0.200	0.253	0.300	0.290	0.160
33.0		0.216	0.230	0.223	0.229	-0.002
54.0		0.221	0.170	0.147	-0.507	-2.305
73.5		-0.126	0.208	0.374	-0.076	0.066
84.0		0.424	0.487	0.006	0.447	0.160
96.0		0.322	0.200	0.314	0.100	-0.071

WING PRESSURE COEFFICIENTS

RUN 250 POINT 2 ALPHA -0.01 PSI 0.00 HEIGHT 07.00

X/C, %		DP 2	DP 6	DP 12	DP 16	DP 22
0.0	(UPPER)	0.473	0.211	0.005	-0.160	-0.027
2.5		-0.400	-0.525	-0.610	-0.720	-0.632
5.0		-0.500	-0.550	-0.700	-0.000	-0.070
10.0		-0.514	-0.502	-0.045	-0.741	-0.000
15.0		-0.521	-0.722	-0.000	-0.747	-0.000
24.0		-0.720	-0.527	-0.905	-0.004	-0.730
33.0		-0.500	-0.570	-0.002	-0.726	-0.722
54.0		-1.222	-0.745	-0.000	-0.201	-0.007
65.0		-0.240	-1.005	-1.242	-1.200	-1.004
78.5		-0.241	-2.002	-2.300	-2.031	-3.150
79.5		-63.225	-104.507	-150.306	-122.753	-91.250
80.5		42.400	23.501	34.340	0.207	-0.227
81.5		-2.304	-5.402	-13.015	-6.074	-6.003
82.0		0.000	0.530	12.541	-1.731	1.402
84.0		-7.022	-3.700	-0.207	-2.170	0.250
87.0		5.047	-4.029	1.006	-0.571	3.004
90.0		0.150	-0.370	0.005	-2.501	3.504
93.0		-0.255	0.200	1.434	-2.737	-0.232
96.0		-0.300	-1.005	2.570	3.134	-2.005
100.0		-2.030	-2.504	-3.433	-2.400	-2.003
2.5	(LOWER)	-0.007	-0.060	-0.005	-0.006	0.030
5.0		-0.130	-0.042	-0.042	-0.000	-0.107
10.0		-0.002	-0.010	-0.124	-0.054	-0.233
24.0		-0.102	-0.100	-0.110	-0.200	-0.107
33.0		-0.222	-0.153	-0.100	-0.122	-0.170
54.0		-0.001	-0.157	-0.154	-0.470	-5.501
73.5		-0.295	0.032	0.150	-0.130	0.072
84.0		0.152	0.240	-0.125	0.202	0.100
96.0		0.073	-0.052	0.043	-0.110	-0.212

RUN 250 POINT 14 ALPHA 22.07 PSI 0.00 HEIGHT 00.01

X/C, %		DP 2	DP 6	DP 12	DP 16	DP 22
0.0	(UPPER)	-11.030	-7.031	-4.010	-3.262	-2.322
2.5		-4.710	-7.727	-4.243	-3.206	-2.302
5.0		-3.047	-8.406	-4.427	-3.410	-2.207
10.0		-2.200	-4.344	-4.020	-3.536	-2.472
15.0		-1.007	-1.707	-5.202	-3.003	-2.303
24.0		-1.502	-1.230	-4.451	-4.430	-2.402
33.0		-1.120	-1.000	-2.546	-4.535	-2.430
54.0		-0.434	-0.043	-0.753	-0.137	-2.010
65.0		-0.071	-1.175	-0.040	-1.375	-3.331
78.5		-0.004	-2.520	-2.007	-2.054	-4.240
79.5		-34.030	-53.050	-00.770	-04.200	-50.000
80.5		21.500	15.030	20.050	2.712	-0.000
81.5		-3.450	-2.300	-9.530	-5.367	-6.190
82.0		4.204	-1.116	6.320	-1.213	-2.505
84.0		-4.000	-2.000	-4.100	-2.370	-4.503
87.0		2.550	-3.310	0.147	-1.071	-3.002
90.0		-0.210	-0.072	-0.140	-2.000	-2.115
93.0		-0.344	-0.410	0.160	-2.133	-0.005
96.0		-0.330	-1.030	0.000	1.007	-3.075
100.0		-1.575	-1.615	-1.007	-1.737	-1.950
2.5	(LOWER)	0.497	0.100	0.112	0.047	0.106
5.0		0.710	0.070	0.512	0.421	0.340
10.0		0.720	0.500	0.575	0.507	0.300
24.0		0.450	0.500	0.505	0.321	0.250
33.0		0.401	0.424	0.400	0.304	-0.045
54.0		0.352	0.312	0.250	-0.074	-2.500
73.5		-0.103	0.353	0.420	-0.100	0.052
84.0		0.471	0.547	-0.032	0.440	0.125
96.0		0.370	0.350	0.355	0.703	-0.131

RUN 250 POINT 4 ALPHA 4.02 PSI 0.00 HEIGHT 00.20

X/C, %		DP 2	DP 6	?	DP 16	DP 22
0.0	(UPPER)	-0.152	-0.027	[illegible]	-1.070	-2.100
2.5		-0.050	-1.107	-1.0[illegible]	-1.525	-1.000
5.0		-0.005	-0.004	-1.144	-1.170	-1.267
10.0		-0.700	-0.700	-0.000	-1.002	-1.175
15.0		-0.714	-0.000	-0.002	-0.007	-0.072
24.0		-0.000	-0.020	-0.723	-1.010	-0.000
33.0		-0.030	-0.000	-0.777	-0.002	-0.047
54.0		-0.500	-0.702	-0.030	-0.500	-1.020
65.0		-0.105	-1.140	-1.300	-1.301	-1.105
78.5		-0.100	2.000	-3.220	-3.123	-3.310
79.5		-00.002	-101.701	-152.550	-121.000	-00.000
80.5		41.000	25.111	35.531	2.510	-0.210
81.5		-3.533	-5.104	-13.072	-7.725	-6.717
82.0		0.137	0.035	12.770	-1.513	1.225
84.0		-6.700	-3.720	-0.002	-3.153	0.102
87.0		5.510	-4.002	1.777	-0.020	2.003
90.0		0.122	-0.425	-0.025	-2.574	3.230
93.0		-0.200	0.170	1.331	-2.700	-0.100
96.0		-0.372	-1.000	2.440	2.002	-2.770
100.0		-3.40[illegible]	-3.374	-3.340	-3.314	-2.002
2.5	(LOWER)	0.152	0.201	0.201	0.220	0.320
5.0		0.040	0.140	0.210	0.104	0.157
10.0		0.002	0.225	0.000	0.150	-0.000
24.0		-0.000	-0.031	0.020	-0.130	-0.004
33.0		-0.100	-0.054	-0.056	-0.012	-0.143
54.0		-0.025	-0.074	-0.004	-0.444	-5.242
73.5		-0.201	0.000	0.201	-0.006	0.040
84.0		0.224	0.300	-0.107	0.300	0.130
96.0		0.131	0.001	0.000	-0.007	-0.224

WING PRESSURE COEFFICIENTS

RUN 250 POINT 8 ALPHA 8.05 PSI 0.00 HEIGHT 86.04

X/C, %		BP 2	BP 6	BP 12	BP 16	BP 22
0.0	UPPER	-1.[illegible]	-2.945	-4.303	-3.937	-2.319
2.5		-1.273	-1.720	-2.207	-3.319	-1.000
5.0		-1.177	-1.420	-1.847	-3.220	-1.700
10.0		-1.014	-1.157	-1.358	-1.931	-1.884
15.0		-0.910	-1.106	-1.146	-1.183	-1.840
24.0		-0.[illegible]	-0.882	-0.989	-1.177	-1.846
33.0		-0.700	-0.838	-1.003	-0.991	-1.426
54.0		-0.529	-0.915	-1.105	-0.202	-1.314
66.0		-0.180	-1.202	-1.443	-1.428	-1.432
78.5		-0.218	-3.029	-3.427	-3.311	-3.500
79.5		-87.256	-102.871	-155.850	-123.037	-92.253
80.5		43.605	28.568	37.111	3.605	-0.250
81.5		-3.084	-5.227	-14.681	-8.530	-7.181
82.0		0.218	0.485	12.082	-1.075	0.875
84.0		-6.068	-3.016	-6.205	-3.209	-0.250
87.0		5.010	-4.952	1.780	-0.787	2.520
88.0		0.142	-0.500	-10.123	-2.737	2.066
93.0		-0.273	0.082	1.281	-2.051	-0.171
96.0		-0.384	-1.173	2.447	2.062	-3.305
100.0		-3.535	-3.413	-3.375	-3.400	-2.090
2.5	LOWER	0.375	0.305	0.326	0.290	0.363
5.0		0.236	0.285	0.371	0.324	0.257
10.0		0.241	0.372	0.290	0.290	0.083
24.0		0.047	0.062	0.126	-0.033	-0.040
33.0		-0.015	0.032	0.021	0.050	-0.152
54.0		0.016	-0.014	-0.042	-0.512	-5.344
73.5		-0.227	0.127	0.220	-0.106	0.019
84.0		0.254	0.323	-0.113	0.313	0.673
96.0		0.166	0.022	0.100	-0.066	-0.295

WING PRESSURE COEFFICIENTS

RUN 250 POINT 13 ALPHA 22.07 PSI 0.00 HEIGHT 86.06

X/C, %		BP 2	BP 6	BP 12	BP 16	BP 22
0.0	UPPER	-12.010	-7.050	-4.511	-3.076	-2.073
2.5		-4.005	-2.000	-4.770	-3.053	-2.532
5.0		-3.100	-5.787	-5.031	-3.000	-2.015
10.0		-2.373	-3.103	-5.073	-4.009	-2.000
15.0		-2.006	-1.710	-5.570	-5.201	-2.703
24.0		-1.007	-1.200	-4.245	-5.[illegible]	-2.042
33.0		-1.231	-1.153	-1.772	-4.263	-2.043
54.3		-0.577	-1.117	-0.000	-0.205	-3.790
66.0		-0.201	-1.442	-1.201	-1.123	-4.403
78.5		-0.240	-3.230	-3.401	-2.703	-5.634
79.5		-88.502	-103.253	-155.002	-123.020	-84.430
80.5		43.573	28.072	38.701	5.212	-0.313
81.5		-2.000	-5.240	-15.256	-8.010	-8.116
82.0		0.146	-0.204	15.442	-0.000	-1.000
84.0		-6.705	-4.223	-6.406	-3.302	-4.043
87.0		5.000	-5.213	1.520	-0.050	-2.700
88.0		0.302	-0.715	-10.517	-2.043	-1.571
93.0		-0.020	-0.107	1.110	-3.077	-0.205
96.0		-0.174	-1.406	2.300	2.703	-6.310
100.0		-3.170	-3.133	-3.131	-3.315	-3.251
2.5	LOWER	0.304	0.025	-0.040	-0.124	-3.020
5.0		0.004	0.017	0.410	0.200	0.310
10.0		0.010	0.510	0.403	0.400	0.251
24.0		0.305	0.410	0.440	0.203	0.100
33.0		0.250	0.317	0.200	0.325	-0.203
54.0		0.230	0.210	0.141	-1.200	-5.340
73.5		-0.207	0.240	0.312	-0.210	-0.005
84.0		0.353	0.434	-0.102	0.340	-0.011
96.0		0.204	0.170	0.200	-0.000	-0.302

RUN 250 POINT 8 ALPHA 12.02 PSI 0.00 HEIGHT 87.26

X/C, %		BP 2	BP 6	BP 12	BP 16	BP 22
0.0	UPPER	-3.760	-5.041	-3.495	-2.010	-2.231
2.5		-2.175	-4.000	-3.204	-2.070	-2.100
5.0		-1.770	-3.003	-3.340	-2.000	-1.004
10.0		-1.445	-1.231	-3.107	-2.795	-2.130
15.0		-1.200	-1.434	-2.002	-2.015	-1.935
24.0		-1.204	-1.000	-1.042	-2.795	-2.000
33.0		-0.001	-1.019	-1.134	-2.314	-1.015
54.0		-0.505	-1.051	-1.000	-0.312	-2.057
66.0		-0.234	-1.414	-1.404	-1.301	-2.207
78.5		-0.272	-3.267	-3.522	-2.943	-4.075
79.5		-70.333	-100.500	183.050	-129.326	-87.005
80.5		45.420	28.514	38.539	3.035	-0.310
81.5		-3.007	-5.510	-18.110	-8.200	-8.545
82.0		0.500	0.020	13.450	-1.000	-0.400
84.0		-7.200	-4.220	-6.500	-3.364	-2.447
87.0		5.001	-5.300	1.830	-0.025	-0.000
88.0		0.151	-0.000	-10.001	-2.100	0.450
93.0		-0.242	0.020	1.347	-2.031	-0.225
96.0		-0.305	-1.320	2.525	3.114	-4.001
100.0		-3.007	-3.552	-3.522	-3.502	-3.350
2.5	LOWER	0.442	0.304	0.304	0.227	0.274
5.0		0.330	0.402	0.401	0.336	0.253
10.0		0.344	0.400	0.307	0.343	0.002
24.0		0.123	0.130	0.188	0.011	-0.054
33.0		0.005	0.075	0.075	0.066	-0.210
54.0		0.037	-0.001	-0.052	-0.810	-5.020
73.5		-0.202	0.133	0.204	-0.225	-0.120
84.0		0.275	0.324	-0.175	0.205	-0.030
96.0		0.170	0.510	0.080	-0.101	-0.400

RUN 262 POINT 3 ALPHA -0.02 PSI 0.00 HEIGHT 80.03

X/C, %		BP 2	BP 6	BP 12	BP 16	BP 22
0.0	UPPER	0.302	0.210	0.420	0.054	0.477
2.5		0.200	0.100	0.010	-0.120	-0.150
5.0		0.120	0.000	-0.070	-0.150	-0.220
10.0		0.015	-0.027	-0.145	-0.225	-0.205
15.0		-0.023	-0.101	-0.181	-0.232	-0.225
24.0		-0.100	-0.112	-0.181	-0.252	-0.230
33.0		-0.111	-0.141	-0.195	-0.242	-0.230
54.0		-0.061	-0.223	-0.307	-0.000	-0.254
66.0		0.005	-0.350	-0.470	-0.412	-0.334
78.5		0.054	-0.007	-1.045	-0.000	-0.007
79.5		-1.211	-1.190	-1.203	-1.102	-1.200
80.5		-1.002	-1.195	-1.140	-1.152	0.033
81.5		-0.710	-0.795	-0.823	-0.703	-1.107
82.0		-0.717	-0.061	-0.002	-0.037	-1.007
84.0		-0.509	-0.742	-0.351	-0.051	-0.000
87.0		-0.400	-0.504	-0.535	-0.473	-0.435
88.0		-0.340	-0.411	-0.302	-0.370	-0.442
93.0		-0.205	-0.252	-0.225	-0.241	0.074
96.0		-0.100	-0.123	-0.130	-0.119	-0.241
100.0		-0.072	-0.003	-0.034	-0.034	-0.100
2.5	LOWER	-0.377	-0.207	-0.203	-0.007	-0.033
5.0		-0.221	-0.142	-0.133	-0.072	-0.057
10.0		-0.130	-0.221	-0.107	-0.057	-0.070
24.0		-0.007	-0.005	-0.053	-0.001	-0.050
33.0		-0.002	-0.032	-0.022	-0.010	0.001
54.0		0.055	0.029	0.051	-0.005	0.017
73.5		0.005	0.250	0.237	0.031	0.312
84.0		0.347	0.419	0.070	0.450	0.412
96.0		0.235	0.201	0.295	0.201	0.230

WING PRESSURE COEFFICIENTS

RUN 202 POINT 5 ALPHA 4.02 PSI 0.00 HEIGHT 86.07

X/C. %		DP 2	DP 6	DP 12	DP 16	DP 22
0.0	(UPPER)	0.578	0.402	0.210	-0.174	-0.524
2.5		0.087	-0.074	-0.404	-0.872	-0.917
5.0		-0.027	-0.126	-0.371	-0.542	-0.866
10.0		-0.117	-0.183	-0.367	-0.456	-0.540
15.0		-0.148	-0.254	-0.325	-0.415	-0.425
24.0		-0.229	-0.235	-0.295	-0.364	-0.377
33.0		-0.266	-0.244	-0.274	-0.339	-0.335
54.0		-0.066	-0.205	-0.260	0.020	-0.331
65.0		0.063	-0.413	-0.482	-0.482	-0.402
76.5		0.050	-1.067	-1.066	-1.010	-1.125
79.5		-1.253	-1.225	-1.204	-1.203	-1.368
80.5		-0.975	-1.267	-1.150	-1.152	0.035
81.5		-0.719	-0.838	-0.817	-0.705	-1.230
82.0		-0.754	-0.721	-0.850	-0.813	-1.050
84.0		-0.602	-0.790	-0.336	-0.864	-0.724
87.0		-0.485	-0.582	-0.540	-0.483	-0.560
88.0		-0.363	-0.431	-0.373	-0.374	-0.567
93.0		-0.295	-0.208	-0.216	-0.255	0.011
96.0		-0.217	-0.128	-0.146	-0.141	-0.311
100.0		-0.094	-0.011	-0.041	-0.072	-0.104
2.5	(LOWER)	-0.090	-0.026	0.150	0.260	0.343
5.0		-0.057	0.010	0.125	0.190	0.225
10.0		-0.003	0.060	0.072	0.140	0.110
24.0		-0.004	0.005	0.042	0.021	0.025
33.0		0.017	0.041	0.057	0.071	0.082
54.0		0.102	0.066	0.060	-0.060	-0.010
73.5		-0.003	0.273	0.360	0.034	0.282
84.0		0.290	0.463	0.071	0.472	0.304
96.0		0.264	0.298	0.311	0.274	0.212

RUN 202 POINT 7 ALPHA 8.06 PSI 0.00 HEIGHT 88.63

X/C. %		DP 2	DP 6	DP 12	DP 16	DP 22
0.0	(UPPER)	0.523	0.143	-0.937	-1.834	-2.763
2.5		-0.188	-0.438	-0.787	-1.277	-1.811
5.0		-0.225	-0.308	-0.700	-0.948	-1.267
10.0		-0.277	-0.393	-0.660	-0.782	-0.906
15.0		-0.287	-0.417	-0.540	-0.640	-0.871
24.0		-0.343	-0.350	-0.421	-0.544	-0.545
33.0		-0.315	-0.342	-0.381	-0.447	-0.467
54.0		-0.088	-0.380	-0.425	0.060	-0.408
65.0		0.046	-0.473	-0.530	-0.510	-0.525
76.5		0.033	-1.000	-1.113	-1.050	-1.267
79.5		-1.285	-1.277	-1.244	-1.238	-1.530
80.5		-1.102	-1.243	-1.147	-1.171	0.020
81.5		-0.770	-0.876	-0.803	-0.813	-1.372
82.0		-0.773	-0.882	-0.845	-0.867	-1.183
84.0		-0.827	-0.777	-0.307	-0.721	-0.844
87.0		-0.513	-0.586	-0.530	-0.529	-0.675
88.0		-0.371	-0.408	-0.370	-0.412	-0.661
93.0		-0.366	-0.247	-0.221	-0.290	0.002
96.0		-0.233	-0.109	-0.184	-0.181	-0.372
100.0		-0.103	-0.034	-0.063	-0.107	-0.305
2.5	(LOWER)	0.147	0.235	0.377	0.428	0.486
5.0		0.100	0.172	0.318	0.365	0.304
10.0		0.134	0.202	0.228	0.202	0.240
24.0		0.078	0.102	0.142	0.117	0.093
33.0		0.094	0.112	0.131	0.145	0.060
54.0		0.153	0.109	0.125	-0.067	-0.057
73.5		-0.019	0.261	0.365	0.033	0.243
84.0		0.411	0.480	0.060	0.480	0.367
96.0		0.280	0.301	0.310	0.263	0.157

WING PRESSURE COEFFICIENTS

RUN 202 POINT 9 ALPHA 12.07 PSI 0.00 HEIGHT 87.00

X/C. %		DP 2	DP 6	DP 12	DP 16	DP 22
0.0	(UPPER)	0.044	-0.835	-3.048	-3.084	-1.804
2.5		-0.434	-0.798	-1.582	-3.302	-1.434
5.0		-0.422	-0.882	-1.195	-2.884	-1.373
10.0		-0.457	-0.805	-0.870	-0.776	-1.385
15.0		-0.486	-0.578	-0.722	-0.776	-1.[illegible]3
24.0		-0.490	-0.479	-0.579	-0.883	-1.205
33.0		-0.427	-0.451	-0.500	-0.582	-1.187
54.0		-0.195	-0.423	-0.583	0.004	-0.870
65.0		0.040	-0.537	-0.502	-0.586	-0.801
76.5		0.027	-1.120	-1.156	-1.082	-1.309
79.5		-1.319	-1.313	-1.379	-1.310	-1.080
80.5		-1.113	-1.156	-1.174	-0.942	0.012
81.5		-0.771	-0.831	-0.832	-0.706	-1.507
82.0		-0.784	-0.886	-0.687	-0.831	-1.370
84.0		-0.825	-0.783	-0.307	-0.721	-1.124
87.0		-0.567	-0.583	-0.542	-0.512	-0.006
88.0		-0.388	-0.463	-0.378	-0.382	-0.570
93.0		-0.313	-0.248	-0.237	-0.290	0.067
96.0		-0.245	-0.120	-0.105	-0.257	-0.017
100.0		-0.123	-0.070	-0.101	-0.211	-0.271
2.5	(LOWER)	0.315	0.411	0.484	0.485	0.493
5.0		0.250	0.307	0.448	0.476	0.447
10.0		0.204	0.264	0.256	0.4[illegible]	0.320
24.0		0.181	0.200	0.240	0.200	0.144
33.0		0.174	0.190	0.236	0.210	0.068
54.0		0.200	0.180	0.184	-0.070	-0.087
73.5		-0.024	0.298	0.381	0.041	0.241
84.0		0.415	0.4[illegible]	0.054	0.467	0.343
96.0		0.296	0.305	0.304	0.247	0.196

RUN 202 POINT 14 ALPHA 22.06 PSI 0.00 HEIGHT 95.12

X/C. %		DP 2	DP 6	DP 12	DP 16	DP 22
0.0	(UPPER)	-4.170	-5.032	-2.830	-2.173	-1.308
2.5		-1.012	-0.505	-3.082	-2.208	-1.308
5.0		-1.463	-2.005	-2.108	-2.247	-1.379
10.0		-1.110	-1.072	-3.377	-2.317	-1.470
15.0		-0.982	-1.083	-3.084	-2.400	-1.381
24.0		-0.829	-0.856	-1.884	-2.414	-1.306
33.0		-0.805	-0.788	-0.995	-2.135	-1.332
54.0		-0.246	-0.811	-0.884	0.130	-1.418
65.0		0.021	-0.868	-0.884	-0.794	-1.427
76.5		0.005	-1.185	-1.237	-1.144	-1.575
79.5		-1.376	-1.334	-1.444	-1.300	-1.061
80.5		-0.775	-1.200	-1.280	-1.442	-0.021
81.5		-0.834	-1.002	-0.962	-1.125	-1.747
82.0		-0.913	-0.738	-0.787	-0.9[illegible]8	-1.044
84.0		-0.870	-0.021	-0.261	-0.000	-1.432
87.0		-0.544	-0.058	-0.540	-0.861	-1.300
88.0		-0.402	-0.490	-0.458	-0.644	-1.388
93.0		-0.349	-0.329	-0.327	-0.482	0.032
96.0		-0.263	-0.174	-0.292	-0.[illegible]	-1.084
100.0		-0.150	-0.075	-0.188	-0.[illegible]	-0.980
2.5	(LOWER)	0.640	0.458	0.389	0.342	0.388
5.0		0.605	0.624	0.580	0.550	0.490
10.0		0.537	0.630	0.597	0.596	0.460
24.0		0.445	0.487	0.475	0.414	0.315
33.0		0.413	0.407	0.408	0.401	0.040
54.0		0.347	0.308	0.280	-0.142	-0.194
73.5		-0.077	0.371	0.443	0.002	0.250
84.0		0.500	0.550	0.037	0.487	0.300
96.0		0.354	0.349	0.320	0.230	-0.023

WING PRESSURE COEFFICIENTS

RUN 263 POINT 2 ALPHA 0.01 PSI 0.00 HEIGHT 87.36

X/C, %		DP 2	DP 8	DP 12	DP 16	DP 22
0.0	UPPER	-0.887	-0.208	0.325	0.207	0.253
2.5		1.884	0.702	0.286	-0.142	-0.436
5.0		0.529	0.205	0.004	-0.180	-0.379
10.0		-0.014	0.000	-0.101	-0.229	-0.463
15.0		-0.063	-0.123	-0.217	-0.353	-0.322
24.0		-0.130	-0.127	-0.300	-0.430	-0.372
33.0		-0.132	-0.183	-0.336	-0.368	-0.300
54.0		-0.004	-0.340	-0.543	-0.037	-0.422
65.0		0.063	-0.804	-0.779	-0.784	-0.525
78.5		-0.021	-1.081	-2.067	-2.069	-1.713
79.5		-23.723	-30.007	-30.206	-29.463	-17.256
80.5		-1.103	-4.202	-3.064	-0.300	-0.075
81.5		-1.030	-1.702	-1.402	-2.478	-2.008
82.0		0.210	-0.770	2.102	-2.080	-0.757
84.0		-2.701	-2.108	-2.000	-1.883	-0.604
87.0		0.329	-1.009	-0.030	-0.000	0.114
88.0		-0.506	-0.050	-2.075	-1.301	0.134
93.0		-0.533	-0.052	-0.205	-1.226	0.031
98.0		-0.006	-0.571	0.007	0.272	-1.049
100.0		-1.235	-1.025	-0.015	-0.080	-0.010
2.5	LOWER	-1.025	-1.350	-0.035	-0.110	0.110
5.0		-0.760	-0.333	-0.329	-0.000	0.027
10.0		-0.322	-0.710	-0.100	-0.027	-0.040
24.0		-0.104	-0.100	-0.073	-0.103	-0.020
33.0		-0.113	-0.053	-0.031	-0.015	0.044
54.0		0.005	0.004	0.052	-0.174	-0.044
73.5		-0.045	0.300	0.455	-0.020	0.250
84.0		0.729	0.000	0.037	0.533	0.300
98.0		0.422	0.473	0.453	0.344	0.190

WING PRESSURE COEFFICIENTS

RUN 263 POINT 6 ALPHA 8.02 PSI 0.00 HEIGHT 88.00

X/C, %		DP 2	DP 8	DP 12	DP 16	DP 22
0.0	UPPER	-0.570	0.190	-0.232	-2.000	-2.000
2.5		1.740	0.327	-0.577	-1.205	-2.110
5.0		0.710	0.071	-0.504	-0.044	-2.040
10.0		-0.100	-0.211	-0.020	-0.013	-1.004
15.0		-0.271	-0.402	-0.501	-0.723	-1.074
24.0		-0.300	-0.400	-0.500	-0.003	-0.003
33.0		-0.337	-0.423	-0.507	-0.001	-0.007
54.0		-0.002	-0.523	-0.710	0.040	-0.000
65.0		-0.004	-0.004	-0.000	-0.000	-0.705
78.5		-0.005	-2.373	-2.531	-2.225	-2.054
79.5		-23.202	-30.307	-30.252	-29.074	-18.400
80.5		0.410	-4.200	-5.106	-5.710	-0.075
81.5		-2.004	-1.502	-1.775	-2.977	-3.108
82.0		-0.042	-0.031	1.057	-2.230	-1.200
84.0		-3.107	-2.540	-2.340	-2.150	-1.114
87.0		0.004	-2.200	-1.012	-1.107	-0.310
88.0		-0.030	-1.070	-3.037	-1.500	-0.317
93.0		-0.710	-0.030	-0.373	-1.300	0.020
98.0		-0.040	-0.705	0.040	0.100	-1.040
100.0		-1.030	-0.025	-0.002	-0.030	-0.007
2.5	LOWER	-0.004	-0.130	0.200	0.234	0.400
5.0		-0.212	0.000	0.210	0.310	0.300
10.0		0.000	-0.005	0.102	0.200	0.227
24.0		0.010	0.071	0.142	0.000	0.000
33.0		0.075	0.102	0.120	0.142	0.042
54.0		0.100	0.115	0.144	-0.174	-0.006
73.5		-0.095	0.304	0.202	0.005	0.105
84.0		0.537	0.577	0.632	0.401	0.290
98.0		0.374	0.300	0.307	0.310	0.127

WING PRESSURE COEFFICIENTS

RUN 263 POINT 4 ALPHA 4.00 PSI 0.00 HEIGHT 87.00

X/C, %		DP 2	DP 8	DP 12	DP 16	DP 22
0.0	UPPER	-0.880	-0.345	0.331	-2.405	-1.400
2.5		1.050	0.074	-0.122	-0.711	-1.100
5.0		0.536	0.340	-0.265	-0.533	-0.676
10.0		-0.004	-0.102	-0.414	-0.534	-0.770
15.0		-0.170	-0.203	-0.407	-0.500	-0.566
24.0		-0.252	-0.200	-0.440	-0.548	-0.542
33.0		-0.242	-0.323	-0.450	-0.404	-0.311
54.0		-0.052	-0.442	-0.005	0.012	-0.560
65.0		-0.003	-0.715	-0.900	-0.844	-0.670
78.5		-0.025	-2.270	-2.373	-2.233	-1.020
79.5		-23.534	-30.217	-30.005	-29.040	-17.003
80.5		-0.415	-4.420	-5.754	-6.014	-0.067
81.5		-2.030	-1.540	-1.000	-2.573	-2.031
82.0		0.000	-0.000	1.077	-2.104	-0.040
84.0		-2.020	-2.306	-2.107	-2.050	-0.040
87.0		0.230	-2.152	-0.022	-1.071	-0.034
88.0		-0.710	-0.006	-2.007	-1.513	-0.040
93.0		-3.025	-0.573	-0.332	-1.317	0.030
98.0		-0.572	-0.002	0.004	0.221	-1.250
100.0		-1.103	-0.915	0.072	-0.503	-0.000
2.5	LOWER	-1.251	-0.000	-0.050	0.201	0.307
5.0		-3.403	-0.100	0.024	0.105	0.266
10.0		-0.154	-0.303	0.010	0.192	0.122
24.0		-0.003	-0.030	0.040	0.000	0.029
33.0		-0.021	0.027	0.050	0.000	0.040
54.0		0.140	0.050	0.001	-0.172	-0.044
73.5		-0.052	0.317	0.422	-0.000	0.112
84.0		0.022	0.046	0.037	0.510	0.343
98.0		0.405	0.307	0.446	0.320	0.154

WING PRESSURE COEFFICIENTS

RUN 263 POINT 8 ALPHA 12.00 PSI 0.00 HEIGHT 88.33

X/C, %		DP 2	DP 8	DP 12	DP 16	DP 22
0.0	UPPER	0.007	0.207	-1.000	-3.000	-2.100
2.5		1.125	-0.753	-1.100	-3.753	-2.150
5.0		0.515	-0.300	-1.010	-2.570	-2.175
10.0		-0.150	-0.534	-0.000	-0.000	-2.270
15.0		-0.300	-0.047	-0.775	-0.031	-2.370
24.0		-0.001	-0.500	-0.721	-0.004	-2.103
33.0		-0.404	-0.501	-0.704	-0.700	-1.520
54.0		-0.127	-0.032	-0.027	0.075	-0.014
65.0		-0.002	-0.915	-1.004	-1.004	-0.000
78.5		-0.040	-2.405	-2.502	-2.211	-2.507
79.5		-22.032	-29.000	-30.075	-29.040	-18.100
80.5		0.702	-4.101	-5.040	-6.513	-0.070
81.5		-2.210	-1.445	-1.042	-2.510	-3.000
82.0		-0.170	-0.001	1.754	-2.202	-1.722
84.0		-3.220	-2.020	-2.277	-2.204	-1.000
87.0		-0.043	-2.340	-1.004	-1.230	-0.001
88.0		-0.037	-1.120	-3.000	-1.003	-0.057
93.0		-0.775	-0.074	-0.420	-1.405	0.001
98.0		-0.005	-0.705	-0.001	0.000	-2.010
100.0		-0.020	-0.003	-0.037	-0.020	-0.004
2.5	LOWER	-0.104	0.102	0.330	0.343	0.410
5.0		-0.004	0.227	0.307	0.415	0.422
10.0		0.133	0.210	0.200	0.403	0.220
24.0		0.100	0.100	0.243	0.100	0.107
33.0		0.143	0.107	0.215	0.230	0.021
54.0		0.227	0.175	0.102	-0.101	-0.021
73.5		-0.071	0.310	0.413	0.000	0.204
84.0		0.402	0.540	0.012	0.503	0.207
98.0		0.347	0.304	0.421	0.333	0.122

WING PRESSURE COEFFICIENTS

RUN 263 POINT 13 ALPHA 22.05 PSI 0.00 HEIGHT 04.05

X/C %		DP 2	DP 6	DP 12	DP 16	DP 22
0.0	UPPER	0.154	-3.586	-10.123	-5.095	-2.731
2.5		-0.253	-1.522	-4.106	-5.300	-2.752
5.0		-0.512	-1.272	-3.006	-5.080	-2.014
10.0		-0.066	-1.130	-2.150	-5.348	-3.023
15.0		-0.726	-1.183	-1.371	-2.080	-2.042
24.0		-0.810	-1.100	-1.126	-1.311	-3.040
33.0		-0.730	-1.027	-1.030	-1.047	-3.500
54.0		-0.206	-0.641	-1.040	0.123	-2.105
65.0		-0.063	-1.000	-1.244	-1.220	-1.500
75.5		-0.063	-2.017	-2.610	-2.446	-2.020
79.5		-22.081	-30.334	-30.783	-30.405	-30.401
80.5		1.442	-4.120	-4.500	-7.000	-0.196
81.5		-2.329	-1.200	-1.060	-2.735	-4.445
82.0		-0.304	-0.980	1.025	-2.456	-2.421
84.0		-3.305	-2.037	-2.337	-2.510	-2.391
87.0		-0.136	-2.400	-1.115	-1.503	-1.542
90.0		-1.046	-1.231	-3.107	-1.004	-1.525
93.0		-0.036	-0.740	-0.516	-1.026	-0.042
96.0		-0.720	-0.057	-0.120	-0.106	-2.340
100.0		-0.735	-0.500	-0.500	-0.005	-0.735
2.5	LOWER	0.320	0.390	0.043	-0.031	0.000
5.0		0.385	0.510	0.448	0.200	0.350
10.0		0.400	0.563	0.510	0.551	0.412
24.0		0.300	0.405	0.473	0.405	0.300
33.0		0.417	0.403	0.414	0.400	-0.010
54.0		0.413	0.230	0.310	-0.207	-0.402
73.5		-0.142	0.380	0.481	-0.023	0.181
84.0		0.542	0.600	-0.010	0.530	0.204
96.0		0.490	0.454	0.470	0.374	0.140

RUN 264 POINT 2 ALPHA 0.02 PSI 0.00 HEIGHT 07.00

X/C %		DP 2	DP 6	DP 12	DP 16	DP 22
0.0	UPPER	-0.170	0.202	0.100	0.246	0.103
2.5		1.770	0.066	0.276	-0.120	-0.551
5.0		0.304	0.250	-0.001	-0.242	-0.437
10.0		-0.137	0.027	-0.180	-0.440	-0.562
15.0		-0.136	-0.171	-0.186	-0.502	-0.370
24.0		-0.210	-0.116	-0.311	-0.010	-0.461
33.0		-0.182	-0.229	-0.305	-0.560	-0.500
54.0		-0.483	-0.300	-0.002	-0.072	-0.532
65.0		-0.003	-0.740	-0.004	-1.020	-0.077
75.5		-0.116	-2.510	-2.630	-2.701	-2.102
79.5		-44.007	-50.560	-70.035	-57.003	-34.560
80.5		-0.006	-7.150	-10.036	-11.301	-0.300
81.5		-2.410	-3.176	-1.524	-3.300	-4.244
82.0		1.005	0.007	5.635	-2.716	-0.371
84.0		-4.300	-3.345	-2.001	-2.000	-0.295
87.0		1.543	-3.103	-0.614	-1.210	1.105
90.0		-0.503	-0.000	-4.513	-1.022	0.000
93.0		-0.516	-0.377	0.000	-1.001	-0.004
96.0		-0.502	-0.705	0.500	0.052	-1.577
100.0		-2.027	-2.110	-1.041	-1.507	-1.344
2.5	LOWER	-3.013	-2.500	-1.276	-0.331	0.113
5.0		-1.560	-0.537	-0.707	-0.204	0.000
10.0		-0.513	-1.340	-0.401	-0.001	-0.000
24.0		-0.342	-0.310	-0.146	-0.201	-0.077
33.0		-0.223	-0.130	-0.000	-0.005	-0.003
54.0		0.002	-0.100	-0.020	-0.307	-1.730
73.5		-0.131	0.437	0.530	-0.000	0.100
84.0		1.003	1.129	0.020	0.075	0.312
96.0		0.553	0.595	0.580	0.328	0.003

WING PRESSURE COEFFICIENTS

RUN 264 POINT 4 ALPHA 4.02 PSI 0.00 HEIGHT 06.01

X/C %		DP 2	DP 6	DP 12	DP 16	DP 22
0.0	UPPER	-0.450	0.404	0.000	-0.201	-1.042
2.5		2.120	0.005	0.004	-0.000	-1.300
5.0		0.404	0.205	-0.200	-0.578	-0.057
10.0		-0.243	-0.154	-0.401	-0.000	-0.000
15.0		-0.257	-0.240	-0.451	-0.570	-0.004
24.0		-0.336	-0.270	-0.021	-0.704	-0.043
33.0		-0.205	-0.304	-0.500	-0.670	-0.020
54.0		-0.240	-0.513	-0.053	-0.000	-0.057
65.0		-0.007	-0.001	-1.147	-1.130	-0.047
75.5		-0.131	-2.001	-3.010	-3.052	-2.053
79.5		-60.023	-60.720	-70.757	-60.005	-30.004
80.5		0.072	-7.000	-11.415	-11.047	-0.442
81.5		-2.732	-3.200	-1.704	-3.773	-4.500
82.0		1.005	-0.152	5.500	-2.073	-0.200
84.0		-4.750	-3.723	-2.070	-3.500	-0.530
87.0		1.421	-3.404	-0.012	-1.300	0.075
90.0		-0.070	-1.107	-4.002	-2.123	0.024
93.0		-0.051	-0.520	-0.030	-1.056	-0.001
96.0		-0.701	-0.002	0.510	0.044	-1.070
100.0		-2.534	-2.121	-1.000	-1.051	-1.320
2.5	LOWER	-3.003	-1.043	-0.500	0.000	0.350
5.0		-1.243	-0.342	-0.235	0.004	0.210
10.0		-0.434	-0.070	-0.124	0.003	0.000
24.0		-0.250	-0.101	-0.021	-0.057	-0.015
33.0		-0.140	-0.040	-0.020	0.002	-0.022
54.0		0.110	-0.022	0.015	-0.330	-1.734
73.5		-0.140	0.375	0.402	-0.005	0.110
84.0		0.040	0.072	-0.030	0.000	0.354
96.0		0.500	0.402	0.050	0.200	0.025

RUN 264 POINT 6 ALPHA 8.01 PSI 0.00 HEIGHT 06.04

X/C %		DP 2	DP 6	DP 12	DP 16	DP 22
0.0	UPPER	-0.000	0.050	0.300	-1.010	-2.030
2.5		2.540	1.010	-0.300	-1.103	-2.100
5.0		0.022	0.230	-0.027	-0.040	-2.070
10.0		-0.340	-0.342	-0.710	-0.004	-2.023
15.0		-0.423	-0.500	-0.070	-0.027	-1.373
24.0		-0.472	-0.472	-0.001	-0.002	-0.045
33.0		-0.300	-0.512	-0.701	-0.700	-0.720
54.0		-0.133	-0.023	-0.030	-0.037	-0.010
65.0		-0.000	-1.003	-1.343	-1.103	-0.070
75.5		-0.124	-3.170	-3.367	-3.100	-3.571
79.5		-60.113	-60.205	-70.350	-60.003	-30.045
80.5		0.015	-7.750	-10.041	-12.000	-0.440
81.5		-2.024	-3.141	-2.001	-3.030	-4.014
82.0		1.301	-0.500	5.221	-3.237	-0.033
84.0		-4.002	-3.005	-3.300	-3.340	-0.070
87.0		1.151	-3.007	-1.034	-1.400	0.500
90.0		-0.050	-1.370	-5.007	-2.240	0.470
93.0		-0.010	-0.071	-0.[illegible]	-2.067	-0.000
96.0		-0.043	-1.124	0.500	0.700	-2.243
100.0		-2.357	-1.045	-1.050	-1.001	-1.330
2.5	LOWER	-2.200	-0.030	-0.000	0.225	0.411
5.0		-0.707	-0.070	0.000	0.230	0.325
10.0		-0.210	-0.357	0.000	0.230	0.100
24.0		-0.123	-0.017	0.000	0.020	0.034
33.0		-0.045	0.050	0.001	0.007	-0.030
54.0		0.101	0.030	0.002	-0.330	-1.013
73.5		-0.140	0.327	0.433	-0.072	0.000
84.0		0.772	0.740	-0.040	0.531	0.205
96.0		0.437	0.300	0.470	0.277	0.004

WING PRESSURE COEFFICIENTS

RUN 204 POINT 9 ALPHA 11.00 PSI 0.00 HEIGHT 86.64

X/C. %		DP 2	DP 6	DP 12	DP 16	DP 22
0.0	UPPER	-0.806	0.166	-0.630	-4.074	-2.472
2.5		2.868	0.520	-0.873	-3.068	-2.446
5.0		0.796	0.057	-0.070	-1.428	-2.422
10.0		-0.200	-0.420	-0.968	-1.125	-2.734
15.0		-0.535	-0.062	-0.868	-1.022	-2.062
24.0		-0.007	-0.024	-0.835	-0.902	-2.021
33.0		-0.515	-0.061	-0.806	-0.863	-1.186
54.0		-0.111	-0.750	-1.014	-0.003	-0.793
66.0		-0.101	-1.131	-1.307	-1.261	-1.061
78.5		-0.121	-3.344	-3.522	-3.203	-3.136
79.5		-44.520	-50.000	-77.223	-60.054	-30.000
80.5		1.000	-7.514	-9.946	-12.171	-0.306
81.5		-2.930	-3.110	-2.178	-3.030	-5.527
82.0		1.170	-0.510	4.063	-3.350	-1.586
84.0		-5.150	-4.000	-3.444	-3.467	-1.986
87.0		0.967	-3.002	-1.157	-1.050	-0.145
90.0		-1.005	-1.370	-5.148	-2.378	-0.196
93.0		-0.938	-0.727	-0.210	-2.150	-0.166
96.0		-0.832	-1.178	0.479	0.054	-2.040
100.0		-2.044	-1.740	-1.500	-1.495	-1.306
2.5	LOWER	-1.434	-0.202	0.182	0.246	0.338
5.0		-0.420	0.110	0.248	0.320	0.368
10.0		-0.031	0.021	0.212	0.338	0.264
24.0		0.068	0.113	0.203	0.143	0.124
33.0		0.008	0.130	0.160	0.168	-0.061
54.0		0.215	0.113	0.138	-0.268	-1.516
73.5		-0.181	0.297	0.304	-0.060	0.102
84.0		0.815	0.620	0.057	0.402	0.211
96.0		0.368	0.362	0.302	0.254	0.016

RUN 204 POINT 14 ALPHA 22.04 PSI 0.00 HEIGHT 87.24

X/C. %		DP 2	DP 6	DP 12	DP 16	DP 22
0.0	UPPER	-0.348	-1.517	-0.020	-0.000	-3.323
2.5		1.217	-1.072	-3.334	-0.068	-3.418
5.0		0.313	-1.143	-2.063	-0.227	-3.630
10.0		-0.557	-1.268	-1.842	-2.460	-3.678
15.0		-0.011	-1.378	-1.478	-1.520	-4.301
24.0		-0.000	-1.100	-1.207	-1.444	-4.848
33.0		-0.873	-1.077	-1.200	-1.302	-3.001
54.0		-0.230	-1.030	-1.327	0.035	-1.000
65.0		-0.200	-1.404	-1.582	-1.587	-1.751
78.5		-0.225	-3.593	-3.047	-3.302	-3.983
79.5		-44.567	-50.435	-78.370	-50.307	-30.020
80.5		2.040	-7.520	-10.040	-12.255	-0.530
81.5		-3.214	-3.313	-2.232	-3.073	-6.000
82.0		0.605	-0.020	5.037	-3.307	-2.530
84.0		-5.543	-4.326	-3.501	-3.010	-2.029
87.0		0.500	-3.030	-1.293	-1.045	-1.104
90.0		-1.300	-1.547	-5.203	-2.550	-1.111
93.0		-1.176	-0.871	-0.302	-2.300	-0.200
96.0		-1.112	-1.327	0.320	0.307	-3.202
100.0		-1.730	-1.507	-1.415	-1.370	-1.302
2.5	LOWER	-0.123	0.370	-0.020	-0.215	-0.104
5.0		0.171	0.472	0.357	0.272	0.230
10.0		0.350	0.450	0.414	0.404	0.371
24.0		0.207	0.381	0.426	0.331	0.2[illegible]
33.0		0.314	0.341	0.348	0.355	-0.148
54.0		0.368	0.261	0.247	-0.395	-1.029
73.5		-0.326	0.307	0.432	-0.152	0.073
84.0		0.544	0.500	-0.100	0.407	0.170
96.0		0.382	0.370	0.417	0.264	0.010

WING PRESSURE COEFFICIENTS

RUN 205 POINT 3 ALPHA 6.01 PSI 0.00 HEIGHT 87.20

X/C. %		DP 2	DP 6	DP 12	DP 16	DP 22
0.0	UPPER	0.505	-0.570	-1.420	0.323	-0.000
2.5		1.040	0.012	0.052	-0.120	-0.715
5.0		0.323	0.244	0.044	-0.263	-0.501
10.0		-0.202	0.000	-0.000	-0.041	-0.733
15.0		-0.226	-0.240	-0.134	-0.000	-0.000
24.0		-0.350	-0.191	-0.343	-0.050	-0.021
33.0		-0.275	-0.310	-0.406	-0.700	-0.072
54.0		-0.050	-0.007	-0.000	-0.204	-0.730
66.0		-0.242	-0.000	-1.241	-1.204	-0.040
78.5		-0.275	-3.203	-3.520	-3.036	-2.001
79.5		-00.000	-117.741	-153.576	-110.303	-00.500
80.5		0.435	-13.200	-22.241	-21.107	-0.074
81.5		-3.263	-7.010	-1.067	-5.063	-7.150
82.0		3.414	1.067	13.271	-3.020	0.030
84.0		-7.531	-5.340	-3.030	-4.202	0.207
87.0		4.243	-5.223	-0.131	-1.000	2.021
90.0		-0.242	-0.023	-7.470	-2.001	2.763
93.0		-0.424	-0.105	0.000	-2.020	-0.231
96.0		-0.040	-1.230	1.005	2.310	-2.570
100.0		-5.033	-4.113	-3.503	-3.395	-2.523
2.5	LOWER	-8.024	-4.160	-2.300	-0.040	0.011
5.0		-3.145	-1.277	-1.404	-0.002	-0.102
10.0		-1.300	-2.405	-0.021	-0.322	-0.224
24.0		-0.050	-0.037	-0.347	-0.412	-0.174
33.0		-0.500	-0.342	-0.201	-0.224	-0.110
54.0		0.025	-0.200	-0.151	-0.037	-4.300
73.5		-0.267	0.027	0.021	-0.237	0.032
84.0		1.000	1.400	-0.140	0.730	0.101
96.0		0.735	0.003	0.076	0.274	-0.150

RUN 205 POINT 4 ALPHA 4.01 PSI 0.00 HEIGHT 87.10

X/C. %		DP 2	DP 6	DP 12	DP 16	DP 22
0.0	UPPER	0.034	0.000	0.057	0.000	-1.747
2.5		2.275	0.003	0.240	-0.578	-1.500
5.0		0.277	0.157	-0.254	-0.070	-1.000
10.0		-0.370	-0.002	-0.427	-0.070	-0.007
15.0		-0.202	-0.344	-0.400	-0.007	-0.005
24.0		-0.400	-0.255	-0.551	-1.000	-0.741
33.0		-0.313	-0.307	-0.077	-0.004	-0.745
54.0		-0.049	-0.560	-1.004	-0.100	-0.030
65.0		-0.221	-1.044	-1.400	-1.400	-1.044
78.5		-0.252	-3.573	-3.722	-3.010	-3.111
79.5		-00.200	-112.000	-147.415	-111.003	-00.020
80.5		0.005	-12.000	-21.305	-20.500	-0.024
81.5		-3.504	-7.007	-1.120	-5.103	-7.121
82.0		4.010	1.200	12.500	-4.001	0.293
84.0		-7.400	-5.400	-4.120	-4.474	-0.003
87.0		3.021	-5.207	-0.412	-1.314	2.552
90.0		-0.400	-1.055	-7.444	-2.750	2.432
93.0		-0.523	-0.292	0.710	-2.007	-0.201
96.0		-0.710	-1.307	1.573	2.130	-2.720
100.0		-4.702	-4.004	-3.013	-3.202	-2.470
2.5	LOWER	-8.074	-3.563	-1.400	-0.277	0.254
5.0		-2.504	-0.074	-0.700	-0.152	0.123
10.0		-0.900	-1.017	-0.444	-0.045	-0.042
24.0		-0.477	-0.433	-0.130	-0.230	-0.005
33.0		-0.357	-0.100	-0.141	-0.090	-0.112
54.0		0.005	-0.205	-0.003	-0.570	-4.211
73.5		-0.313	0.499	0.582	-0.200	0.005
84.0		1.400	1.466	-0.132	0.071	0.171
96.0		0.677	0.560	0.050	0.243	-0.140

WING PRESSURE COEFFICIENTS

RUN 265 POINT 6 ALPHA 0.06 PSI 0.00 HEIGHT 87.46

X/C, %	BP 2	BP 6	BP 12	BP 16	BP 22
0.0 (UPPER)	0.373	1.530	0.564	-0.887	-3.187
2.5	2.765	0.772	-0.180	-1.090	-2.634
5.0	0.340	-0.026	-0.560	-1.017	-2.407
10.0	-0.580	-0.480	-0.829	-1.166	-1.922
15.0	-0.527	-0.683	-0.771	-1.160	-1.073
24.0	-0.585	-0.480	-0.663	-1.175	-0.827
33.0	-0.440	-0.584	-0.580	-1.054	-0.963
54.0	-0.580	-0.710	-1.221	-0.188	-1.034
65.0	-0.295	-1.221	-1.500	-1.010	-1.223
78.5	-0.292	-4.068	-4.336	-4.268	-3.395
79.5	-87.960	-115.862	-151.230	-114.713	-66.024
80.5	1.102	-13.888	-21.747	-21.850	-0.005
81.5	-3.714	-8.102	-1.423	-5.668	-7.525
82.0	4.747	0.847	12.470	-4.538	0.058
84.0	-8.063	-5.982	-4.880	-4.812	-0.285
87.0	3.800	-5.981	-0.710	-1.582	2.712
88.0	-0.684	-1.305	-8.036	-3.053	2.100
93.0	-0.734	-0.542	0.540	-3.131	-0.230
98.0	-0.971	-1.563	1.529	2.126	-3.102
100.0	-4.754	-4.068	-3.748	-3.257	-2.550
2.5 (LOWER)	-5.348	-2.778	-0.744	0.000	0.274
5.0	-2.130	-0.508	-0.310	0.053	0.210
10.0	-0.705	-1.320	-0.183	0.114	0.050
24.0	-0.308	-0.272	-0.018	-0.120	-0.045
33.0	-0.251	-0.101	-0.055	-0.005	-0.151
54.0	0.120	-0.136	-0.087	-0.018	-4.403
73.5	-0.373	0.415	0.522	-0.220	-0.045
84.0	1.278	1.240	-0.164	0.584	0.104
98.0	0.808	0.526	0.007	0.100	-0.260

RUN 265 POINT 8 ALPHA 12.07 PSI 0.00 HEIGHT 88.07

X/C, %	BP 2	BP 6	BP 12	BP 16	BP 22
0.0 (UPPER)	-0.108	1.172	0.527	-3.225	-3.046
2.5	3.280	0.866	-0.537	-1.760	-2.979
5.0	0.457	-0.018	-0.847	-1.380	-2.908
10.0	-0.734	-0.847	-1.058	-1.380	-3.377
15.0	-0.734	-0.882	-0.877	-1.205	-2.722
24.0	-0.752	-0.872	-0.862	-1.321	-1.528
33.0	-0.581	-0.768	-1.010	-1.171	-0.980
54.0	-0.542	-0.805	-1.323	-0.187	-1.114
65.0	-0.278	-1.421	-1.704	-1.687	-1.428
78.5	-0.311	-4.491	-4.851	-4.502	-4.073
79.5	-87.951	-115.861	-151.582	-114.899	-70.090
80.5	1.884	-13.073	-21.710	-22.068	-1.008
81.5	-4.056	-8.423	-1.883	-5.805	-8.530
82.0	4.258	0.826	12.225	-4.752	-0.741
84.0	-8.458	-6.357	-4.943	-4.943	-1.171
87.0	3.228	-5.866	-0.904	-1.860	1.363
88.0	-0.995	-1.558	-8.268	-3.190	1.255
93.0	-1.067	-0.805	0.448	-3.251	-0.263
98.0	-1.232	-1.721	1.500	2.048	-4.090
100.0	-4.521	-3.834	-3.678	-3.268	-2.563
2.5 (LOWER)	-4.441	-1.787	-0.273	0.068	0.182
5.0	-1.858	-0.181	-0.012	0.186	0.233
10.0	-0.472	-0.738	0.024	0.251	0.130
24.0	-0.248	-0.075	0.085	-0.011	0.033
33.0	-0.128	0.013	0.038	0.005	-0.184
54.0	0.178	-0.037	-0.026	-0.612	-4.488
73.5	-0.301	0.318	0.490	-0.227	-0.055
84.0	1.068	0.968	-0.185	0.588	0.098
98.0	0.530	0.394	0.545	0.103	-0.188

WING PRESSURE COEFFICIENTS

RUN 265 POINT 13 ALPHA 22.01 PSI 0.00 HEIGHT 96.46

X/C, %	BP 2	BP 6	BP 12	BP 16	BP 22
0.0 (UPPER)	-1.502	0.237	-3.215	-7.006	-4.149
2.5	3.022	0.048	-1.050	-0.385	-4.301
5.0	0.538	-0.595	-2.117	-3.000	-4.288
10.0	-1.014	-1.076	-1.900	-2.125	-3.210
15.0	-1.170	-1.051	-1.078	-1.007	-3.005
24.0	-1.260	-1.214	-1.546	-1.937	-4.500
33.0	-1.081	-1.205	-1.451	-1.000	-2.043
54.0	-0.730	-1.332	-1.734	-0.150	-1.083
65.0	-0.500	-1.018	-2.187	-2.100	-2.234
78.5	-0.530	-5.383	-5.740	-5.485	-5.420
79.5	-84.118	-124.005	-182.000	-123.451	-76.545
80.5	2.197	-15.387	-23.175	-24.470	-1.332
81.5	-5.013	-9.878	-2.550	-8.021	-10.451
82.0	3.840	0.220	12.437	-5.885	-2.078
84.0	-9.812	-7.255	-5.782	-6.017	-2.006
87.0	2.888	-6.780	-1.483	-2.420	0.284
88.0	-1.882	-1.881	-9.283	-4.054	0.156
93.0	-1.635	-0.076	0.158	-4.638	-0.453
98.0	-1.702	-2.036	1.354	1.754	-4.020
100.0	-4.048	-3.450	-3.183	-3.002	-2.005
2.5 (LOWER)	-2.254	-0.001	-0.001	-0.515	-0.346
5.0	-0.621	0.344	0.231	0.052	0.024
10.0	0.047	0.244	0.241	0.338	0.115
24.0	0.033	0.248	0.316	0.000	0.114
33.0	0.138	0.214	0.218	0.222	-0.244
54.0	0.315	0.085	0.064	-0.048	-5.201
73.5	-0.075	0.180	0.290	-0.428	-0.134
84.0	0.705	0.621	-0.384	0.391	0.035
98.0	0.400	0.275	0.333	0.057	-0.231

RUN 273 POINT 3 ALPHA 0.01 PSI 0.00 HEIGHT 88.76

X/C, %	BP 2	BP 6	BP 12	BP 16	BP 22
0.0 (UPPER)	0.578	0.502	0.437	0.428	0.301
2.5	-0.150	-0.249	-0.332	-0.300	-0.315
5.0	-0.181	-0.230	-0.288	-0.326	-0.345
10.0	-0.207	-0.268	-0.317	-0.326	-0.306
15.0	-0.210	-0.254	-0.303	-0.310	-0.290
24.0	-0.212	-0.231	-0.263	-0.287	-0.252
33.0	-0.182	-0.231	-0.249	-0.272	-0.225
54.0	0.072	-0.285	-0.287	1.231	-0.240
65.0	0.035	-0.276	0.593	1.487	8.417
78.5	0.036	-0.582	-0.748	1.438	-0.510
79.5	-0.418	-0.488	-0.500	-0.595	-0.740
80.5	-0.384	-0.445	0.328	1.218	0.324
81.5	-0.423	1.148	-0.585	1.211	-0.749
82.0	-0.368	-0.446	-0.558	-0.589	1.190
84.0	-0.450	-0.438	-0.586	-0.584	-0.820
87.0	-0.484	-0.477	-0.577	-0.603	-0.888
88.0	-0.452	-0.507	-0.586	-0.602	-0.790
93.0	-0.451	-0.530	-0.581	-0.598	0.044
98.0	-0.430	-0.553	-0.587	-0.593	-0.751
100.0	-0.402	-0.574	-0.534	-0.578	-0.742
2.5 (LOWER)	0.063	0.007	0.137	0.170	0.155
5.0	0.058	0.048	0.084	0.122	0.088
10.0	0.050	0.064	0.075	0.087	0.088
24.0	0.045	0.040	0.073	0.084	0.005
33.0	0.052	0.100	0.133	0.151	0.026
54.0	0.230	0.254	0.313	0.372	0.240
73.5	0.745	0.566	0.718	0.870	0.520
84.0	0.555	0.620	-0.155	0.620	0.541
98.0	0.408	0.421	0.407	0.412	0.318

WING PRESSURE COEFFICIENTS

RUN 273 POINT 5 ALPHA 3.00 PSI 0.00 HEIGHT 88.00

X/C, %		BP 2	BP 6	BP 12	BP 16	BP 22
0.0	(UPPER)	0.083	-0.365	-0.708	-0.810	-1.142
2.5		-0.584	-0.780	-1.118	-0.968	-1.088
5.0		-0.452	-0.583	-0.684	-0.777	-0.838
10.0		-0.463	-0.540	-0.612	-0.839	-0.817
15.0		-0.371	-0.438	-0.513	-0.548	-0.513
24.0		-0.328	-0.368	-0.412	-0.432	-0.406
33.0		-0.287	-0.329	-0.362	-0.378	-0.340
54.0		0.025	-0.330	-0.353	1.243	-0.315
65.0		0.042	-0.331	0.050	1.551	0.283
78.5		0.045	-0.579	-0.818	1.470	-0.557
79.5		-0.418	-0.470	-0.641	-0.828	-0.706
80.5		-0.395	-0.447	0.290	1.247	0.363
81.5		-0.423	1.181	-0.850	1.244	-0.740
82.0		-0.377	-0.447	-0.833	-0.828	1.242
84.0		-0.463	-0.454	-0.833	-0.802	-0.723
87.0		-0.472	-0.500	-0.850	-0.835	-0.774
88.0		-0.480	-0.525	-0.860	-0.838	-0.715
93.0		-0.471	-0.547	-0.861	-0.833	0.054
98.0		-0.453	-0.562	-0.840	-0.827	-0.703
100.0		-0.383	-0.561	-0.811	-0.827	-0.701
2.5	(LOWER)	0.353	0.324	0.433	0.468	0.453
5.0		0.288	0.218	0.335	0.368	0.340
10.0		0.211	0.282	0.255	0.278	0.245
24.0		0.134	0.140	0.180	0.181	0.143
33.0		0.134	0.176	0.207	0.232	0.036
54.0		0.287	0.294	0.344	0.378	0.280
73.5		0.729	0.602	0.854	0.872	0.527
84.0		0.678	0.628	-0.705	0.856	0.550
98.0		0.422	0.426	0.386	0.400	0.317

RUN 273 POINT 6 ALPHA 12.01 PSI 0.00 HEIGHT 88.00

X/C, %		BP 2	BP 6	BP 12	BP 16	BP 22
0.0	(UPPER)	-2.013	-4.887	-8.010	-2.543	-1.360
2.5		-1.801	-2.161	-2.437	-2.463	-1.366
5.0		-1.156	-1.511	-1.857	-2.337	-1.268
10.0		-0.817	-1.136	-1.412	-2.307	-1.275
15.0		-0.774	-0.924	-1.163	-2.224	-1.232
24.0		-0.613	-0.800	-0.870	-1.410	-1.194
33.0		-0.484	-0.577	-0.706	-0.707	-1.152
54.0		-0.082	-0.481	-0.548	1.200	-1.063
65.0		0.041	-0.412	-0.266	1.556	0.000
78.5		0.044	-0.522	-1.045	1.527	-0.788
79.5		-0.400	-0.438	-0.848	-0.770	-0.851
80.5		-0.373	-0.433	0.212	1.313	0.214
81.5		-0.600	1.244	-0.938	1.324	-0.855
82.0		-0.358	-0.406	-0.836	-0.756	1.295
84.0		-0.422	-0.410	-0.840	-0.755	-0.829
87.0		-0.441	-0.442	-0.800	-0.750	-0.850
88.0		-0.438	-0.485	-0.833	-0.785	-0.887
93.0		-0.444	-0.503	-0.771	-0.751	0.055
98.0		-0.426	-0.506	-0.687	-0.731	-0.853
100.0		-0.386	-0.490	-0.6[illegible]	-0.682	-0.837
2.5	(LOWER)	0.666	0.596	0.548	0.577	0.527
5.0		0.581	0.560	0.597	0.605	0.521
10.0		0.500	0.587	0.520	0.531	0.433
24.0		0.337	0.351	0.385	0.377	0.271
33.0		0.314	0.342	0.370	0.378	0.037
54.0		0.359	0.383	0.426	0.417	0.307
73.5		0.760	0.675	0.859	0.862	0.495
84.0		0.773	0.700	-0.877	0.548	0.482
98.0		0.485	0.476	0.426	0.400	0.260

RUN 273 POINT 7 ALPHA 8.02 PSI 0.00 HEIGHT 88.39

X/C, %		BP 2	BP 6	BP 12	BP 16	BP 22
0.0	(UPPER)	-1.023	-2.060	-3.130	-3.557	-1.813
2.5		-0.890	-1.331	-1.727	-1.884	-1.478
5.0		-0.763	-0.879	-1.208	-1.412	-1.429
10.0		-0.639	-0.788	-0.837	-1.030	-1.368
15.0		-0.552	-0.638	-0.760	-0.838	-1.183
24.0		-0.452	-0.500	-0.576	-0.831	-0.770
33.0		-0.378	-0.425	-0.485	-0.526	-0.512
54.0		-0.008	-0.378	-0.421	1.266	-0.432
65.0		0.050	-0.388	-0.173	1.530	0.180
78.5		0.051	-0.542	-0.880	1.501	-0.888
79.5		-0.422	-0.453	-0.714	-0.875	-0.883
80.5		-0.381	-0.448	0.250	1.277	0.262
81.5		-0.416	1.214	-0.723	1.278	-0.879
82.0		-0.386	-0.432	-0.72[illegible]	-0.864	1.272
84.0		-0.448	-0.434	-0.712	-0.849	-0.828
87.0		-0.464	-0.476	-0.718	-0.878	-0.860
88.0		-0.456	-0.505	-0.740	-0.878	-0.920
93.0		-0.483	-0.525	-0.712	-0.875	0.063
98.0		-0.446	-0.535	-0.872	-0.864	-0.850
100.0		-0.379	-0.526	-0.821	-0.851	-0.821
2.5	(LOWER)	0.558	0.555	0.583	0.567	0.545
5.0		0.454	0.370	0.503	0.526	0.478
10.0		0.386	0.467	0.411	0.431	0.362
24.0		0.218	0.251	0.288	0.297	0.205
33.0		0.225	0.283	0.293	0.313	0.045
54.0		0.314	0.339	0.383	0.397	0.288
73.5		0.742	0.635	0.838	0.893	0.503
84.0		0.761	0.714	-0.887	0.846	0.518
98.0		0.453	0.452	0.414	0.410	0.269

RUN 273 POINT 11 ALPHA 21.97 PSI 0.00 HEIGHT 97.81

X/C, %		BP 2	BP 6	BP 12	BP 16	BP 22
0.0	(UPPER)	-1.313	-1.147	-0.982	-0.938	-0.834
2.5		-1.256	-1.133	-0.981	-0.924	-0.828
5.0		-1.241	-1.127	-0.981	-0.917	-0.818
10.0		-1.198	-1.116	-0.990	-0.915	-0.829
15.0		-1.155	-1.102	-0.973	-0.909	-0.8[illegible]
24.0		-1.074	-1.052	-0.957	-0.905	-0.824
33.0		-0.983	-1.020	-0.952	-0.885	-0.826
54.0		-0.581	-0.953	-0.907	1.331	-0.848
65.0		-0.067	-0.885	-0.493	1.583	7.917
78.5		-0.004	-0.777	-0.904	1.589	-0.887
79.5		-0.826	-0.732	-0.886	-0.868	-0.841
80.5		-0.815	-0.782	0.325	1.346	0.320
81.5		-0.808	1.302	-0.798	1.378	-0.872
82.0		-0.800	-0.728	-0.774	-0.818	1.352
84.0		-0.803	-0.742	-0.722	-0.810	-0.780
87.0		-0.779	-0.737	-0.781	-0.798	-0.834
88.0		-0.788	-0.764	-0.774	-0.782	-0.784
93.0		-0.801	-0.773	-0.751	-0.788	-0.848
98.0		-0.788	-0.780	-0.727	-0.750	-0.758
100.0		-0.838	-0.846	-0.853	-0.717	-0.748
2.5	(LOWER)	0.805	0.848	0.577	0.528	0.443
5.0		0.785	0.844	0.645	0.613	0.513
10.0		0.885	0.883	0.617	0.584	0.482
24.0		0.480	0.492	0.493	0.473	0.341
33.0		0.445	0.481	0.462	0.464	-0.071
54.0		0.421	0.440	0.475	0.465	0.358
73.5		0.786	0.735	0.718	0.833	0.486
84.0		0.791	0.880	-0.782	0.881	0.514
98.0		0.485	0.463	0.412	0.397	0.242

WING PRESSURE COEFFICIENTS

RUN 274 POINT 2 ALPHA -0.01 PSI 0.00 HEIGHT 91.01

X/C, %		BP 2	BP 6	BP 12	BP 16	BP 22
0.0	(UPPER)	0.452	0.279	0.063	0.005	-0.002
2.5		-0.338	-0.476	-0.620	-0.703	-0.722
5.0		-0.342	-0.445	-0.552	-0.588	-0.620
10.0		-0.353	-0.433	-0.535	-0.550	-0.573
15.0		-0.352	-0.447	-0.518	-0.524	-0.495
24.0		-0.387	-0.388	-0.482	-0.453	-0.481
33.0		-0.353	-0.440	-0.481	-0.467	-0.418
54.0		-0.081	-0.608	-0.518	2.000	-0.478
65.0		-0.083	31.151	95.973	2.764	-31.464
78.5		-0.073	-2.616	80.474	2.717	27.499
79.5		-93.083	-23.547	0.343	0.873	-0.873
80.5		-0.056	-0.154	0.081	2.006	0.175
81.5		-1.617	1.248	-1.053	2.045	-0.775
82.0		1.300	-3.098	-1.011	-1.083	1.073
84.0		-4.773	-2.541	-1.014	-1.103	-1.337
87.0		-0.123	-1.728	-1.155	-1.233	-1.535
88.0		-1.100	-1.648	-1.182	-1.231	-1.411
93.0		-0.878	-1.472	-1.238	-1.300	-0.028
96.0		-0.782	-1.284	-1.184	-1.227	-1.414
100.0		-1.030	-1.277	-1.080	-1.141	-1.311
2.5	(LOWER)	0.078	0.141	0.180	0.214	0.219
5.0		0.040	0.052	0.104	0.152	0.125
10.0		0.041	0.082	0.075	0.103	0.048
24.0		0.012	0.011	0.055	0.042	0.018
33.0		0.002	0.055	0.081	0.138	-0.108
54.0		0.187	0.295	0.288	-0.070	3.117
73.5		0.633	0.556	0.574	0.800	0.448
84.0		0.635	0.853	-1.461	0.585	0.454
96.0		0.482	0.387	0.244	0.235	0.100

RUN 274 POINT 4 ALPHA 4.00 PSI 0.00 HEIGHT 88.80

X/C, %		BP 2	BP 6	BP 12	BP 16	BP 22
0.0	(UPPER)	-0.204	-0.815	-1.481	-1.850	-2.183
2.5		-0.705	-0.971	-1.190	-1.318	-1.673
5.0		-0.606	-0.770	-0.868	-1.068	-1.138
10.0		-0.566	-0.687	-0.672	-0.885	-0.903
15.0		-0.500	-0.626	-0.743	-0.776	-0.726
24.0		-0.506	-0.542	-0.608	-0.653	-0.625
33.0		-0.448	-0.541	-0.583	-0.588	-0.532
54.0		-0.041	-0.653	-0.581	2.059	-0.584
65.0		-0.074	29.050	94.000	2.696	38.100
78.5		-0.063	-2.642	81.000	2.822	24.060
79.5		-91.590	-23.900	0.356	0.804	-0.717
80.5		-0.711	-0.282	0.130	1.061	0.201
81.5		-1.748	1.763	-1.136	1.877	-0.786
82.0		1.163	-2.208	-1.058	-1.112	1.005
84.0		-4.760	-2.634	-1.138	-1.135	-1.428
87.0		-0.128	-1.786	-1.184	-1.273	-1.559
88.0		-1.150	-1.688	-1.224	-1.231	-1.434
93.0		-0.[illegible]	-1.560	-1.264	-1.250	-0.011
96.0		0.7[illegible]	-1.288	-1.208	-1.220	-1.590
100.0		-0.888	-1.278	-1.108	-1.133	-1.333
2.5	(LOWER)	0.345	0.388	0.420	0.442	0.443
5.0		0.225	0.214	0.253	0.388	0.340
10.0		0.203	0.205	0.248	0.284	0.215
24.0		0.100	0.115	0.188	0.150	0.083
33.0		0.083	0.[illegible]	0.180	0.213	-0.080
54.0		0.200	0.2[illegible]	0.304	-0.034	2.081
73.5		0.850	0.806	0.814	0.901	0.450
84.0		0.883	0.710	-1.503	0.598	0.472
96.0		0.514	0.372	0.230	0.726	0.061

WING PRESSURE COEFFICIENTS

RUN 274 POINT 6 ALPHA 8.03 PSI 0.00 HEIGHT 88.42

X/C, %		BP 2	BP 6	BP 12	BP 16	BP 22
0.0	(UPPER)	-1.507	-2.886	-4.396	-3.300	-1.768
2.5		-1.220	-1.688	-2.146	-2.022	-1.462
5.0		-0.982	-1.264	-1.577	-2.005	-1.418
10.0		-0.836	-1.018	-1.248	-2.110	-1.424
15.0		-0.711	-0.878	-1.044	-1.067	-1.346
24.0		-0.662	-0.750	-0.840	-0.772	-1.205
33.0		-0.576	-0.660	-0.770	-0.881	-1.073
54.0		-0.087	-0.740	-0.703	2.038	-0.835
65.0		-0.081	28.148	95.973	2.824	45.574
78.5		-0.084	-2.864	88.590	2.553	23.727
79.5		-92.406	-24.883	0.326	0.958	-0.838
80.5		-0.818	-0.348	0.172	1.878	0.230
81.5		-1.805	1.703	-1.178	1.908	-0.861
82.0		1.157	-3.188	-1.102	-1.306	1.052
84.0		-4.700	-2.474	-1.181	-1.261	-1.618
87.0		-0.107	-1.687	-1.218	-1.383	-1.738
88.0		-1.123	-1.580	-1.247	-1.388	-1.586
93.0		-0.876	-1.398	-1.315	-1.483	-0.639
96.0		-0.802	-1.242	-1.261	-1.454	-1.571
100.0		-0.882	-1.280	-1.073	-1.148	-1.344
2.5	(LOWER)	0.504	0.507	0.474	0.493	0.455
5.0		0.387	0.342	0.452	0.487	0.387
10.0		0.333	0.432	0.372	0.383	0.280
24.0		0.185	0.188	0.248	0.235	0.118
33.0		0.157	0.207	0.234	0.267	-0.114
54.0		0.231	0.280	0.321	-0.044	2.907
73.5		0.857	0.837	0.837	0.872	0.418
84.0		0.726	0.764	-1.624	0.624	0.449
96.0		0.520	0.368	0.230	0.200	0.051

RUN 274 POINT 7 ALPHA 12.00 PSI 0.00 HEIGHT 88.11

X/C, %		BP 2	BP 6	BP 12	BP 16	BP 22
0.0	(UPPER)	-3.542	-4.518	-3.001	-2.306	-1.632
2.5		-1.805	-4.232	-2.863	-2.154	-1.605
5.0		-1.426	-3.098	-2.838	-2.143	-1.571
10.0		-1.138	-0.947	-2.868	-2.136	-1.568
15.0		-0.941	-0.970	-2.478	-2.138	-1.528
24.0		-0.826	-0.836	-1.888	-2.077	-1.503
33.0		-0.662	-0.750	-0.958	-1.847	-1.428
54.0		-0.061	-0.815	-0.844	1.083	-1.478
65.0		-0.083	28.381	93.787	2.536	46.174
78.5		-0.077	-2.718	94.884	2.463	22.364
79.5		-90.245	-24.425	-0.700	-0.287	-0.887
80.5		-0.770	-0.315	0.087	1.832	0.133
81.5		-1.884	1.640	-2.926	1.814	-0.741
82.0		1.087	-3.236	-1.051	-2.070	1.781
84.0		-4.677	-2.727	-1.734	-1.882	-1.440
87.0		-0.138	-1.958	-1.625	-1.713	-1.588
88.0		-1.117	-1.817	-1.580	-1.542	-1.410
93.0		-0.837	-1.507	-1.526	-1.332	-0.027
96.0		-0.718	-1.184	-1.418	-1.267	-1.352
100.0		-0.884	-1.083	-0.876	-0.884	-1.317
2.5	(LOWER)	0.598	0.545	0.478	0.466	0.417
5.0		0.558	0.478	0.525	0.533	0.442
10.0		0.495	0.557	0.482	0.481	0.368
24.0		0.304	0.326	0.358	0.327	0.210
33.0		0.267	0.305	0.331	0.352	-0.108
54.0		0.209	0.350	0.283	0.004	2.614
73.5		0.858	0.878	0.874	0.881	0.423
84.0		0.738	0.766	-1.439	0.631	0.439
96.0		0.577	0.436	0.317	0.278	0.047

WING PRESSURE COEFFICIENTS

RUN 274 POINT 10 ALPHA 22.00 PSI 0.00 HEIGHT 98.73

X/C, %		BP 2	BP 6	BP 12	BP 16	BP 22
0.0	(UPPER)	-2.015	-1.901	-1.858	-1.523	-1.385
2.5		-1.993	-1.881	-1.858	-1.501	-1.357
5.0		-1.987	-1.861	-1.844	-1.487	-1.338
10.0		-1.926	-1.852	-1.847	-1.481	-1.367
15.0		-1.832	-1.838	-1.813	-1.483	-1.331
24.0		-1.712	-1.785	-1.578	-1.468	-1.348
33.0		-1.475	-1.704	-1.585	-1.438	-1.320
54.0		-1.027	-1.495	-1.460	1.945	-1.351
65.0		-0.198	28.500	94.900	2.300	58.860
78.5		-0.185	-1.868	53.570	2.330	29.160
79.5		-89.880	-28.280	0.278	0.736	-0.434
80.5		-5.514	-7.384	0.243	1.752	0.303
81.5		-2.218	1.557	-1.183	1.744	-0.508
82.0		0.952	-3.281	-1.084	-1.260	1.709
84.0		-5.028	-2.277	-1.188	-1.216	-1.316
87.0		-0.473	-1.550	-1.176	-1.272	-1.442
89.0		-1.500	-1.441	-1.150	-1.231	-1.300
93.0		-1.040	-1.336	-1.114	-1.195	-0.139
96.0		-1.219	-1.225	-1.072	-1.158	-1.262
100.0		-0.822	-1.218	-0.980	-1.141	-1.285
2.5	(LOWER)	0.887	0.520	0.397	0.347	0.241
5.0		0.711	0.588	0.543	0.518	0.393
10.0		0.868	0.624	0.573	0.540	0.395
24.0		0.449	0.482	0.480	0.421	0.262
33.0		0.388	0.425	0.427	0.434	-0.226
54.0		0.364	0.419	0.441	0.072	2.779
73.5		0.638	0.806	0.875	0.818	0.382
84.0		0.717	0.804	-1.292	0.825	0.400
96.0		0.814	0.454	0.276	0.215	0.018

RUN 275 POINT 2 ALPHA 0.02 PSI 0.00 HEIGHT 88.72

X/C, %		BP 2	BP 6	BP 12	BP 16	BP 22
0.0	(UPPER)	0.380	0.150	-0.018	-0.087	-0.208
2.5		-0.455	-0.595	-0.753	-0.782	-0.818
5.0		-0.420	-0.519	-0.663	-0.805	-0.713
10.0		-0.407	-0.534	-0.667	-0.821	-0.656
15.0		-0.358	-0.495	-0.629	-0.810	-0.578
24.0		-0.480	-0.515	-0.532	-0.550	-0.538
33.0		-0.387	-0.545	-0.603	-0.526	-0.484
54.0		-2.135	-0.753	-0.552	2.684	-0.587
65.0		-0.188	55.457	188.610	3.372	142.608
78.5		-0.180	-3.308	103.886	3.247	53.540
79.5		-180.829	-51.018	1.298	2.379	0.218
80.5		-8.350	-11.795	0.062	2.215	0.218
81.5		-3.232	1.916	-1.344	2.184	0.190
82.0		3.718	-5.828	-1.248	-1.323	2.135
84.0		-7.941	-4.185	-1.518	-1.188	-1.556
87.0		0.825	-2.572	-1.267	-1.392	-1.807
89.0		-1.253	-2.228	-1.348	-1.358	-1.540
93.0		-0.505	-1.868	-1.382	-1.431	-0.061
96.0		-0.684	-1.520	-1.271	-1.360	-1.522
100.0		-2.184	-1.811	-1.210	-1.238	-1.402
2.5	(LOWER)	0.010	0.080	0.082	0.155	0.143
5.0		-0.045	-0.028	0.006	0.108	0.082
10.0		-0.032	0.009	-0.002	0.040	-0.006
24.0		-0.074	-0.104	-0.021	-0.027	-0.046
33.0		-0.140	-0.043	0.029	0.100	-0.262
54.0		0.035	0.143	0.234	-0.358	4.317
73.5		0.352	0.517	0.558	0.515	0.454
84.0		0.538	0.576	-1.589	0.499	0.382
96.0		0.364	0.274	0.120	0.146	0.018

WING PRESSURE COEFFICIENTS

RUN 275 POINT 4 ALPHA 3.00 PSI 0.00 HEIGHT 88.06

X/C, %		BP 2	BP 6	BP 12	BP 16	BP 22
0.0	(UPPER)	-0.290	-0.943	-1.025	-1.027	-2.280
2.5		-0.831	-1.313	-1.785	-1.516	-2.101
5.0		-0.722	-0.913	-1.081	-1.170	-1.238
10.0		-0.845	-0.845	-1.020	-0.987	-1.020
15.0		-0.574	-0.787	-0.901	-0.892	-0.857
24.0		-0.832	-0.887	-0.715	-0.751	-0.736
33.0		-0.520	-0.882	-0.753	-0.800	-0.821
54.0		-2.082	-0.845	-0.685	2.851	-0.726
65.0		-0.183	58.149	188.610	3.273	152.808
78.5		-0.175	-3.410	105.388	3.135	52.888
79.5		-187.898	-49.563	1.449	2.478	0.195
80.5		-8.119	-12.137	0.070	2.148	0.231
81.5		-3.161	1.805	-1.356	2.127	0.082
82.0		3.811	-5.707	-1.263	-1.480	2.014
84.0		-7.950	-4.256	-1.833	-1.224	-1.831
87.0		0.834	-2.598	-1.386	-1.483	-1.886
89.0		-1.295	-2.300	-1.481	-1.405	-1.809
93.0		-0.574	-1.948	-1.520	-1.500	-0.086
96.0		-0.877	-1.580	-1.402	-1.499	-1.548
100.0		-2.163	-1.806	-1.311	-1.329	-1.518
2.5	(LOWER)	0.216	0.296	0.301	0.359	0.315
5.0		0.082	0.083	0.193	0.298	0.243
10.0		0.099	0.194	0.144	0.191	0.138
24.0		-0.001	-0.023	0.057	0.058	-0.001
33.0		-0.083	0.010	0.073	0.182	-0.278
54.0		0.048	0.150	0.214	-0.327	4.278
73.5		0.388	0.536	0.572	0.486	0.424
84.0		0.595	0.811	-1.831	0.530	0.383
96.0		0.375	0.204	0.080	0.113	-0.032

RUN 275 POINT 6 ALPHA 6.00 PSI 0.00 HEIGHT 87.18

X/C, %		BP 2	BP 6	BP 12	BP 16	BP 22
0.0	(UPPER)	-1.538	-2.858	-4.120	-2.082	-1.827
2.5		-1.244	-1.898	-2.858	-2.083	-1.548
5.0		-1.048	-1.388	-1.845	-2.836	-1.477
10.0		-0.880	-1.097	-1.338	-2.384	-1.473
15.0		-0.744	-0.932	-1.129	-1.580	-1.408
24.0		-0.738	-0.832	-0.895	-0.819	-1.338
33.0		-0.806	-0.782	-0.900	-0.715	-1.115
54.0		-2.030	-0.805	-0.763	2.819	-0.980
65.0		-0.174	50.733	188.610	3.208	162.052
78.5		-0.184	-3.364	103.253	3.068	52.947
79.5		-187.086	-50.196	1.504	2.285	-0.211
80.5		-8.080	-12.151	0.114	2.105	0.284
81.5		-3.058	1.785	-1.382	2.053	-0.243
82.0		3.884	-5.341	-1.307	-1.631	1.886
84.0		-7.905	-4.017	-1.878	-1.423	-1.827
87.0		0.923	-2.488	-1.408	-1.674	-2.153
89.0		-1.232	-2.127	-1.509	-1.857	-1.783
93.0		-0.548	-1.785	-1.505	-1.757	-0.084
96.0		-0.842	-1.453	-1.458	-1.888	-1.870
100.0		-2.107	-1.839	-1.182	-1.244	-1.427
2.5	(LOWER)	0.427	0.433	0.385	0.423	0.344
5.0		0.281	0.247	0.348	0.418	0.315
10.0		0.257	0.331	0.298	0.328	0.228
24.0		0.108	0.083	0.188	0.154	0.054
33.0		0.021	0.104	0.183	0.237	-0.258
54.0		0.090	0.214	0.271	-0.288	4.208
73.5		0.381	0.571	0.828	0.482	0.412
84.0		0.625	0.881	-1.783	0.560	0.387
96.0		0.410	0.280	0.114	0.141	-0.028

WING PRESSURE COEFFICIENTS

RUN 275 POINT 7 ALPHA 12.00 PSI 6.00 HEIGHT 86.98

X/C, %		BP 2	BP 6	BP 12	BP 16	BP 22
0.0	(UPPER)	-3.588	-4.422	-2.758	-2.058	-1.578
2.5		-2.032	-4.135	-2.700	-2.022	-1.518
5.0		-1.510	-4.118	-2.724	-1.885	-1.495
10.0		-1.218	-0.990	-2.801	-1.847	-1.562
15.0		-1.006	-1.020	-2.854	-1.831	-1.453
24.0		-0.921	-0.943	-1.980	-1.906	-1.431
33.0		-0.735	-0.880	-1.263	-1.700	-1.292
54.0		-2.012	-1.036	-0.701	2.615	-1.340
85.0		-0.211	50.832	106.610	3.180	168.523
78.5		-0.196	-4.226	100.002	3.325	54.400
79.5		-171.050	-48.535	-0.824	1.805	0.428
80.5		-0.180	-13.100	0.050	2.075	0.182
81.5		-2.337	1.886	-2.740	2.070	0.305
82.6		3.833	-7.336	-2.435	-1.414	1.838
84.0		-8.037	-5.208	-2.262	-1.153	-1.271
87.0		0.800	-2.830	-1.481	-1.299	-1.524
89.0		-1.263	-1.987	-1.336	-1.242	-1.230
93.0		-0.487	-1.230	-1.182	-1.238	-0.122
96.0		-0.707	-0.837	-1.085	-1.218	-1.145
100.0		-1.071	-0.875	-0.922	-1.162	-1.135
2.5	(LOWER)	0.483	0.488	0.390	0.405	0.318
5.0		0.436	0.372	0.434	0.456	0.254
10.0		0.388	0.446	0.352	0.390	0.288
24.0		0.260	0.188	0.262	0.245	0.128
33.0		0.108	0.183	0.244	0.307	-0.302
54.0		0.139	0.274	0.331	-0.233	4.273
73.5		0.398	0.607	0.640	0.488	0.435
84.0		0.631	0.885	-1.305	0.556	0.377
96.0		0.454	0.376	0.177	0.153	0.009

RUN 275 POINT 10 ALPHA 22.01 PSI 6.00 HEIGHT 98.98

X/C, %		BP 2	BP 6	BP 12	BP 16	BP 22
0.0	(UPPER)	-2.524	-2.219	-1.848	-1.822	-1.468
2.5		-2.301	-2.108	-1.830	-1.834	-1.454
5.0		-2.236	-2.158	-1.866	-1.586	-1.454
10.0		-2.221	-2.128	-1.832	-1.584	-1.462
15.0		-2.008	-2.080	-1.796	-1.584	-1.430
24.0		-1.810	-1.982	-1.743	-1.547	-1.450
33.0		-1.456	-1.877	-1.800	-1.515	-1.381
54.0		-2.016	-1.586	-1.561	2.648	-1.488
85.0		-0.332	51.837	180.956	3.260	182.296
78.5		-0.326	-2.122	102.760	4.384	54.409
79.5		-163.718	-54.108	1.788	2.534	0.401
80.5		-0.083	-14.177	0.221	2.144	0.344
81.5		-3.034	1.772	-1.195	2.043	0.380
82.0		3.828	-5.880	-1.140	-1.414	1.987
84.0		-8.343	-3.372	-1.842	-1.188	-1.454
87.0		0.463	-2.080	-1.187	-1.261	-1.772
89.0		-1.735	-1.887	-1.282	-1.335	-1.495
93.0		-0.988	-1.640	-1.235	-1.286	-0.233
96.0		-1.383	-1.488	-1.187	-1.288	-1.327
100.0		-1.988	-1.684	-1.058	-1.282	-1.347
2.5	(LOWER)	0.587	0.424	0.383	0.274	0.153
5.0		0.525	0.490	0.435	0.442	0.308
10.0		0.584	0.510	0.468	0.457	0.327
24.0		0.354	0.342	0.378	0.348	0.184
33.0		0.230	0.312	0.338	0.404	-0.418
54.0		0.198	0.347	0.368	-0.183	4.372
73.5		0.408	0.640	0.647	0.457	0.385
84.0		0.815	0.706	-1.381	0.540	0.319
96.0		0.480	0.340	0.138	0.122	-0.074

WING PRESSURE COEFFICIENTS

RUN 276 POINT 2 ALPHA 0.00 PSI 6.00 HEIGHT 88.12

X/C, %		BP 2	BP 6	BP 12	BP 16	BP 22
0.0	(UPPER)	0.196	-0.112	-0.251	-0.201	-0.263
2.5		-0.733	-0.806	-1.929	-1.036	-1.044
5.0		-0.844	-0.825	-0.950	-0.806	-0.990
10.0		-0.808	-0.792	-1.047	-0.838	-0.885
15.0		-0.488	-0.702	-0.963	-0.827	-0.834
24.0		-0.820	-0.718	-0.818	-0.701	-0.758
33.0		-0.471	-0.708	-0.954	-0.808	-0.575
54.0		-3.855	-1.118	-0.706	4.283	-0.883
85.0		-0.418	107.048	308.561	3.926	372.044
78.5		-0.300	-4.857	217.510	8.413	108.782
79.5		-307.885	-108.374	5.007	8.801	2.008
80.5		-18.241	-23.486	0.017	3.347	0.298
81.5		-3.681	2.638	-1.450	3.116	1.072
82.0		10.884	-11.136	-1.331	-1.820	2.883
84.0		-14.452	-7.748	-2.418	-1.363	-1.940
87.0		3.190	-3.449	-1.438	-1.853	-2.520
89.0		-1.563	-2.712	-1.500	-1.878	-1.048
93.0		-0.424	-2.204	-1.836	-1.304	-0.294
96.0		-1.157	-1.975	-1.486	-1.611	-1.745
100.0		-4.838	-2.384	-1.352	-1.517	-1.884
2.5	(LOWER)	-0.188	-0.125	-0.190	-0.004	-0.074
5.0		-0.274	-0.307	-0.308	-0.004	-0.147
10.0		-0.278	-0.261	-0.252	-0.174	-0.108
24.0		-0.312	-0.309	-0.248	-0.203	-0.236
33.0		-0.530	-0.321	-0.218	0.005	-0.818
54.0		-0.348	-0.054	0.004	-1.005	7.715
73.5		-0.844	0.400	0.512	-0.195	0.388
84.0		0.325	0.423	-1.878	0.225	0.213
96.0		0.053	0.002	-0.188	-0.005	-0.206

RUN 276 POINT 4 ALPHA 4.02 PSI 6.00 HEIGHT 87.78

X/C, %		BP 2	BP 6	BP 12	BP 16	BP 22
0.0	(UPPER)	-0.518	-1.156	-1.824	-1.976	-2.221
2.5		-1.156	-1.084	-2.178	-2.140	-2.407
5.0		-0.947	-1.180	-1.304	-1.325	-1.433
10.0		-0.530	-1.063	-1.234	-1.125	-1.187
15.0		-0.882	-0.863	-1.184	-1.037	-1.050
24.0		-0.810	-0.832	-0.949	-0.832	-0.888
33.0		-0.952	-0.853	-1.047	-0.784	-0.882
54.0		-3.250	-1.200	-0.780	4.140	-0.962
85.0		-0.308	101.080	372.283	5.346	385.171
78.5		-0.324	-4.714	203.510	8.173	103.826
79.5		-287.102	-108.077	6.845	5.938	1.793
80.5		-18.564	-22.725	-0.122	3.283	0.387
81.5		-3.538	2.526	-1.517	3.188	1.775
82.0		10.102	-10.574	-1.342	-1.818	2.854
84.0		-13.879	-7.200	-2.456	-1.437	-1.957
87.0		2.927	-3.583	-1.587	-1.800	-2.511
89.0		-1.561	-2.875	-1.848	-1.708	-1.888
93.0		-0.373	-2.293	-1.788	-1.708	-0.187
96.0		-1.083	-1.917	-1.587	-1.687	-1.733
100.0		-4.314	-2.300	-1.403	-1.562	-1.702
2.5	(LOWER)	-0.011	0.102	0.005	0.236	0.119
5.0		-0.200	-0.115	-0.040	0.784	0.004
10.0		-0.128	-0.027	-0.044	0.018	-0.010
24.0		-0.178	-0.206	-0.104	-0.083	-0.142
33.0		-0.415	-0.212	-0.144	0.115	-0.390
54.0		-0.303	0.035	0.070	-0.030	7.441
73.5		0.044	0.407	0.518	-0.130	0.288
84.0		0.394	0.446	-1.051	0.367	0.244
96.0		0.117	0.053	-0.150	-0.070	-0.206

WING PRESSURE COEFFICIENTS

RUN 276 POINT 6 ALPHA 6.02 PSI 0.00 HEIGHT 88.00

X/C, %		BP 2	BP 6	BP 12	BP 16	BP 22
0.0	(UPPER)	-1.770	-2.158	-3.024	-2.700	-1.983
2.5		-1.980	-2.145	-3.270	-2.517	-1.888
5.0		-1.268	-1.831	-3.037	-2.472	-1.808
10.0		-1.082	-1.300	-1.808	-2.465	-1.817
15.0		-0.888	-1.127	-1.263	-2.210	-1.636
24.0		-0.924	-1.008	-1.098	-1.361	-1.527
33.0		-0.887	-1.036	-1.167	-0.830	-1.274
54.0		-2.904	-1.298	-0.875	4.212	-1.200
65.0		-0.409	101.316	372.263	5.433	255.171
78.5		-0.252	-4.757	109.735	9.205	104.904
79.5		-300.745	-101.233	4.230	5.567	1.463
80.5		-15.080	-23.112	0.045	3.405	0.278
81.5		-3.630	2.962	-1.878	2.251	1.433
82.0		9.883	-10.261	-1.741	-2.215	3.047
84.0		-14.025	-7.200	-2.004	-1.687	-2.204
87.0		2.793	-3.800	-1.710	-1.827	-2.763
89.0		-1.511	-2.184	-1.834	-1.873	-2.005
93.0		-0.336	-2.463	-1.908	-1.839	-0.252
96.0		-1.000	-1.000	-1.700	-1.873	-1.000
100.0		-4.251	-2.263	-1.423	-1.473	-1.048
2.5	(LOWER)	0.183	0.233	0.173	0.300	0.147
5.0		0.070	0.015	0.118	0.251	0.141
10.0		0.025	0.008	0.120	0.115	0.067
24.0		-0.078	-0.188	0.011	0.021	-0.123
33.0		-0.338	-0.124	-0.031	0.105	-0.506
54.0		-0.250	0.087	0.156	-0.781	7.500
73.5		0.130	0.408	0.551	-0.003	0.361
84.0		0.300	0.400	-2.022	0.361	0.101
96.0		0.120	0.075	-0.183	-0.056	-0.223

RUN 276 POINT 7 ALPHA 11.00 PSI 0.00 HEIGHT 87.34

X/C, %		BP 2	BP 6	BP 12	BP 16	BP 22
0.0	(UPPER)	-3.713	-4.536	-2.022	-2.140	-1.750
2.5		-2.308	-4.219	-2.930	-2.176	-1.888
5.0		-1.000	-4.457	-2.843	-2.130	-1.704
10.0		-1.236	-1.000	-3.037	-2.055	-1.822
15.0		-1.000	-1.142	-3.020	-2.030	-1.000
24.0		-1.083	-1.188	-2.230	-1.972	-1.504
33.0		-0.787	-1.003	-1.573	-1.922	-1.309
54.0		-2.002	-1.334	-0.789	4.206	-1.575
65.0		-0.416	101.150	372.203	5.404	255.171
78.5		-0.347	-5.360	107.105	9.513	106.002
79.5		-302.535	-100.088	2.045	5.361	2.051
80.5		-15.710	-25.501	-0.140	3.440	0.285
81.5		-3.000	2.023	-2.050	3.227	2.002
82.0		9.007	-12.106	-2.288	-1.700	3.130
84.0		-14.053	-7.438	-3.045	-1.171	-1.635
87.0		2.083	-3.300	-1.544	-1.406	-2.113
89.0		-1.501	-2.778	-1.544	-1.611	-1.475
93.0		-0.284	-1.011	-1.416	-1.368	-0.247
96.0		-0.021	-1.550	-1.294	-1.368	-1.325
100.0		-4.117	-1.452	-1.195	-1.371	-1.221
2.5	(LOWER)	0.261	0.285	0.190	0.290	0.151
5.0		0.218	0.120	0.193	0.325	0.197
10.0		0.175	0.214	0.218	0.210	0.138
24.0		0.005	-0.000	0.070	0.113	-0.020
33.0		-0.261	-0.047	0.024	0.219	-0.023
54.0		-0.211	0.117	0.195	-0.750	7.504
73.5		0.208	0.457	0.573	0.044	0.391
84.0		0.400	0.500	1.510	0.375	0.216
96.0		0.168	0.144	-0.130	-0.038	-0.105

WING PRESSURE COEFFICIENTS

RUN 276 POINT 10 ALPHA 21.90 PSI 0.00 HEIGHT 86.96

X/C, %		BP 2	BP 6	BP 12	BP 16	BP 22
0.0	(UPPER)	-3.204	-2.047	-2.130	-1.006	-1.950
2.5		-3.002	-2.054	-2.140	-1.015	-1.541
5.0		-2.783	-2.500	-2.008	-1.701	-1.020
10.0		-2.574	-2.561	-2.137	-1.713	-1.527
15.0		-2.277	-2.372	-2.113	-1.000	-1.040
24.0		-1.073	-2.301	-1.000	-1.506	-1.561
33.0		-1.332	-2.074	-2.127	-1.500	-1.300
54.0		-2.632	-1.733	-1.535	4.274	-1.051
65.0		-0.404	90.181	372.203	5.007	255.171
78.5		-0.431	-2.007	100.403	9.747	104.400
79.5		-260.457	-112.950	4.071	6.420	2.070
80.5		-15.916	-26.117	0.067	3.412	0.053
81.5		-3.820	2.006	-1.133	3.108	2.105
82.0		9.561	-9.000	-1.145	-1.070	3.142
84.0		-14.100	-5.070	-2.704	-1.102	-1.740
87.0		2.351	-2.814	-1.240	-1.406	-2.230
89.0		-2.046	-2.500	-1.447	-1.403	-1.000
93.0		-0.051	-2.144	-1.410	-1.411	-0.330
96.0		-1.571	-1.902	-1.200	-1.300	-1.407
100.0		-3.030	-2.341	-1.257	-1.475	-1.453
2.5	(LOWER)	0.420	0.210	0.070	0.190	-0.061
5.0		0.378	0.254	0.177	0.232	0.100
10.0		0.323	0.250	0.302	0.274	0.203
24.0		0.100	0.004	0.100	0.250	0.040
33.0		-0.121	0.072	0.130	0.227	-0.741
54.0		-0.115	0.203	0.285	-0.574	7.730
73.5		0.229	0.540	0.963	0.171	0.350
84.0		0.426	0.515	-1.990	0.374	0.150
96.0		0.101	0.130	-0.150	-0.052	-0.200

RUN 200 POINT 3 ALPHA 0.01 PSI 0.00 HEIGHT 86.74

X/C, %		BP 2	BP 6	BP 12	BP 16	BP 22
0.0	(UPPER)	0.571	0.402	0.430	0.402	0.300
2.5		-0.181	-0.255	-0.341	-0.308	-0.333
5.0		-0.100	-0.230	-0.283	-0.327	-0.340
10.0		-0.215	-0.275	-0.330	-0.399	-0.330
15.0		-0.217	-0.283	-0.300	-0.317	-0.283
24.0		-0.313	-0.334	-0.304	-0.303	-0.303
33.0		-0.170	-0.225	-0.205	-0.200	-0.235
54.0		0.950	-0.261	-0.200	0.003	-0.274
65.0		0.030	-0.330	-0.421	-0.371	-0.420
78.5		0.020	-0.540	-0.814	-0.710	-1.050
79.5		-0.302	-0.424	0.537	-0.053	-1.104
80.5		-0.372	-0.462	0.426	0.510	0.047
81.5		-0.544	0.610	0.503	0.570	0.510
82.0		-0.403	-0.370	-0.200	0.500	0.540
84.0		-0.400	-0.447	-0.440	-0.503	0.004
87.0		-0.307	-0.440	-0.500	-0.503	-0.022
89.0		-0.405	-0.472	-0.500	-0.500	-0.700
93.0		-0.412	-0.483	-0.500	-0.631	0.046
96.0		-0.405	-0.470	-0.500	-0.621	-0.751
100.0		-0.350	-0.483	-0.501	-0.517	-0.750
2.5	(LOWER)	0.000	0.100	0.147	0.173	0.100
5.0		0.065	0.053	0.104	0.130	0.113
10.0		0.052	0.071	0.078	0.099	0.071
24.0		0.041	0.044	0.075	0.081	0.000
33.0		0.057	0.101	0.133	0.100	0.020
54.0		0.220	0.201	0.300	0.304	0.170
73.5		0.007	0.570	0.635	0.042	0.523
84.0		0.550	0.620	-0.745	0.030	0.530
96.0		0.422	0.430	0.421	0.410	0.305

WING PRESSURE COEFFICIENTS

RUN 200 POINT 6 ALPHA 2.00 PSI 0.00 HEIGHT 87.14

X/C, %		DP 2	DP 6	DP 12	DP 16	DP 22
0.0	(UPPER)	0.071	-0.220	-0.741	-0.074	-1.213
2.5		-0.575	-0.000	-1.161	-0.537	-1.022
5.0		-0.400	-0.587	-0.002	-0.777	-0.636
10.0		-0.411	-0.562	-0.000	-0.630	-0.631
15.0		-0.363	-0.434	-0.500	-0.545	-0.510
24.0		-0.320	-0.350	-0.400	-0.442	-0.400
33.0		-0.272	-0.310	-0.361	-0.373	-0.337
54.0		0.575	-0.317	-0.330	0.027	-0.334
66.0		0.040	-0.257	-0.481	-0.448	-0.410
73.5		0.040	-0.542	-0.000	-0.625	-0.710
79.5		-0.300	-0.425	0.575	-0.730	-0.721
80.5		-0.303	-0.454	0.404	0.562	0.060
81.5		-0.962	0.053	0.057	0.024	0.546
82.0		-0.415	-0.373	-0.305	0.012	0.567
84.0		-0.400	-0.445	-0.404	-0.704	0.047
87.0		-0.412	-0.430	-0.533	-0.000	-0.720
90.0		-0.416	-0.461	-0.537	-0.006	-0.704
93.0		-0.430	-0.400	-0.053	-0.736	0.000
98.0		-0.422	-0.470	-0.053	-0.715	-0.710
100.0		-0.255	-0.440	-0.537	-0.044	-0.723
2.5	(LOWER)	0.300	0.200	0.440	0.400	0.471
5.0		0.202	0.233	0.344	0.301	0.300
10.0		0.221	0.205	0.264	0.202	0.254
24.0		0.137	0.150	0.180	0.190	0.152
33.0		0.143	0.100	0.210	0.244	0.035
54.0		0.200	0.200	0.364	0.334	0.207
73.5		0.720	0.020	0.053	0.000	0.530
84.0		0.037	0.030	-0.707	0.007	0.553
98.0		0.441	0.450	0.410	0.300	0.311

WING PRESSURE COEFFICIENTS

RUN 200 POINT 9 ALPHA 12.02 PSI 0.00 HEIGHT 86.12

X/C, %		DP 2	DP 6	DP 12	DP 16	DP 22
0.0	(UPPER)	-2.000	-4.010	-5.000	-2.050	-1.406
2.5		-1.500	-2.110	-2.410	-2.406	-1.342
5.0		-1.153	-1.521	-1.000	-2.420	-1.317
10.0		-0.910	-1.140	-1.413	-2.530	-1.320
15.0		-0.707	-0.021	-1.100	-2.207	-1.200
24.0		-0.011	-0.001	-0.075	-1.300	-1.230
33.0		-0.405	-0.567	-0.705	-0.001	-1.100
54.0		0.020	-0.442	-0.040	0.070	-1.107
66.0		0.044	-0.432	-0.050	-0.440	-0.027
73.5		0.042	-0.550	-0.700	-0.000	-1.140
79.5		-0.427	-0.434	0.004	-0.753	-1.231
80.5		-0.422	-0.450	0.442	0.010	0.071
81.5		-0.000	0.714	0.004	0.070	0.004
82.0		-0.470	-0.373	-0.104	0.001	0.032
84.0		-0.452	-0.440	-0.372	-0.004	0.704
87.0		-0.400	-0.445	-0.040	-0.000	-0.037
90.0		-0.476	-0.461	-0.505	-0.003	-0.000
93.0		-0.533	-0.400	-0.500	-0.713	0.000
98.0		-0.530	-0.400	-0.500	-0.703	-0.034
100.0		-0.442	-0.413	-0.500	-0.001	-0.034
2.5	(LOWER)	0.071	0.004	0.042	0.500	0.530
5.0		0.906	0.507	0.006	0.000	0.530
10.0		0.900	0.305	0.531	0.540	0.434
24.0		0.330	0.202	0.300	0.373	0.275
33.0		0.313	0.343	0.372	0.307	0.040
54.0		0.304	0.304	0.420	0.303	0.230
73.5		0.774	0.004	0.000	0.710	0.500
84.0		0.757	0.757	-0.000	0.004	0.500
98.0		0.470	0.404	0.457	0.300	0.200

RUN 200 POINT 8 ALPHA 8.02 PSI 0.01 HEIGHT 87.56

X/C, %		DP 2	DP 6	DP 12	DP 16	DP 22
0.0	(UPPER)	-1.005	-2.111	-3.100	-2.013	-1.023
2.5		-1.023	-1.340	-1.745	-2.002	-1.405
5.0		-0.700	-0.000	-1.220	-1.410	-1.430
10.0		-0.043	-0.775	-0.040	-1.034	-1.302
15.0		-0.547	-0.045	-0.700	-0.042	-1.203
24.0		-0.404	-0.400	-0.570	-0.045	-0.000
33.0		-0.307	-0.410	-0.407	-0.534	-0.531
54.0		0.005	-0.300	-0.404	0.050	-0.403
66.0		0.046	-0.300	-0.521	-0.500	-0.532
73.5		0.045	-0.534	-0.040	-0.700	-0.002
79.5		-0.402	-0.425	0.003	-0.727	-1.130
80.5		-0.304	-0.430	0.437	0.500	0.072
81.5		-0.500	0.000	0.505	0.053	0.504
82.0		-0.410	-0.304	-0.270	0.051	0.010
84.0		-0.411	-0.435	-0.457	-0.073	0.002
87.0		-0.413	-0.422	-0.510	-0.000	-0.014
90.0		-0.430	-0.472	-0.515	-0.000	-0.001
93.0		-0.400	-0.403	-0.530	-0.007	0.000
98.0		-0.455	-0.450	-0.537	-0.007	-0.004
100.0		-0.305	-0.400	-0.524	-0.011	-0.045
2.5	(LOWER)	0.503	0.003	0.570	0.507	0.507
5.0		0.453	0.300	0.510	0.534	0.407
10.0		0.373	0.475	0.410	0.443	0.305
24.0		0.241	0.250	0.202	0.203	0.200
33.0		0.231	0.207	0.290	0.327	0.044
54.0		0.314	0.344	0.302	0.307	0.242
73.5		0.750	0.047	0.040	0.700	0.501
84.0		0.700	0.720	-0.002	0.040	0.505
98.0		0.405	0.474	0.442	0.410	0.270

RUN 200 POINT 12 ALPHA 21.00 PSI 0.01 HEIGHT 87.00

X/C, %		DP 2	DP 6	DP 12	DP 16	DP 22
0.0	(UPPER)	-1.547	-1.223	-1.020	-0.000	-0.000
2.5		-1.414	-1.203	-1.000	-0.000	-0.043
5.0		-1.370	-1.200	-1.023	-0.000	-0.023
10.0		-1.207	-1.101	-1.030	-0.051	-0.002
15.0		-1.217	-1.100	-1.014	-0.040	-0.000
24.0		-1.110	-1.105	-0.000	-0.051	-0.030
33.0		-1.000	-1.000	-0.000	-0.020	-0.037
54.0		0.000	-0.073	-0.530	1.027	-0.000
66.0		-0.070	-0.003	-0.027	-0.001	-0.001
73.5		-0.001	-0.040	-0.000	-0.010	-0.000
79.5		-0.025	-0.700	0.000	-0.024	-0.023
80.5		-0.045	-0.011	0.000	0.000	-0.047
81.5		-0.000	0.701	0.000	0.724	0.040
82.0		-0.001	-0.007	-0.400	0.724	0.072
84.0		-0.000	-0.774	-0.500	-0.022	0.704
87.0		-0.707	-0.730	-0.703	-0.705	-0.000
90.0		-0.770	-0.705	-0.773	-0.707	-0.700
93.0		-0.013	-0.753	-0.750	-0.770	-0.000
98.0		-0.700	-0.757	-0.733	-0.740	-0.747
100.0		-0.534	-0.002	-0.004	-0.003	-0.757
2.5	(LOWER)	0.000	0.000	0.500	0.510	0.450
5.0		0.700	0.003	0.040	0.014	0.510
10.0		0.007	0.000	0.010	0.003	0.402
24.0		0.474	0.405	0.403	0.404	0.342
33.0		0.436	0.450	0.400	0.405	-0.001
54.0		0.412	0.443	0.473	0.422	0.290
73.5		0.010	0.734	0.713	0.753	0.400
84.0		0.770	0.003	-0.751	0.040	0.530
98.0		0.405	0.407	0.445	0.301	0.340

WING PRESSURE COEFFICIENTS

RUN 305 POINT 2 ALPHA -0.01 PSI 0.00 HEIGHT 80.51

X/C, %		DP 2	DP 6	DP 12	DP 16	DP 22
0.0	UPPER	0.122	-0.178	-0.566	-0.715	-1.052
2.5		-0.978	-0.906	-1.135	-1.221	-1.370
5.0		-0.990	-0.772	-0.879	-1.036	-1.111
10.0		-0.550	-0.738	-0.906	-0.816	-0.927
15.0		-0.484	-0.847	-0.906	-0.826	-0.870
24.0		-0.880	-0.707	-0.770	-0.880	-0.700
33.0		-0.448	-0.723	-0.882	-0.700	-0.860
54.0		-0.003	-1.002	-0.751	2.417	-1.000
68.0		-0.277	-0.122	-1.332	-1.196	-1.423
78.5		-0.223	-5.173	-2.470	-2.837	-2.952
79.5		-120.032	-83.087	-1.547	80.067	30.015
80.5		-14.286	-10.004	0.246	-1.523	0.015
81.5		-5.408	-0.575	-1.530	-1.310	-1.534
82.0		4.703	-0.978	-0.004	-1.026	-1.500
84.0		-11.461	-7.106	-2.012	-2.206	-1.330
87.0		0.011	-0.774	-2.082	-2.251	-2.900
88.0		-3.072	-3.030	-2.306	-2.500	-2.222
93.0		-1.575	-1.504	-2.700	-2.047	-0.188
98.0		-1.002	-2.100	-1.579	-2.437	-1.510
100.0		-2.302	-3.045	-1.740	-0.500	-1.107
2.5	ILOWER	-0.020	0.002	0.007	0.232	0.154
5.0		-0.102	-0.106	-0.018	0.190	0.134
10.0		-0.120	-0.023	-0.001	0.054	0.030
24.0		-0.130	-0.173	-0.033	0.000	-0.050
33.0		-0.295	-0.074	0.014	0.152	-0.436
54.0		-0.000	0.133	0.224	0.106	-4.000
73.5		0.000	0.524	0.000	0.031	0.440
84.0		0.473	0.500	-1.046	0.302	0.327
98.0		0.274	0.236	0.370	0.206	0.015

RUN 305 POINT 4 ALPHA 4.04 PSI 0.00 HEIGHT 87.50

X/C, %		DP 2	DP 6	DP 12	DP 16	DP 22
0.0	UPPER	-0.707	-1.577	-2.523	-2.900	-3.100
2.5		-1.200	-1.502	-1.083	-2.206	-2.011
5.0		-0.923	-1.943	-1.440	-1.002	-1.004
10.0		-0.832	-1.120	-1.336	-1.250	-1.343
15.0		-0.882	-0.886	-1.271	-1.173	-1.213
24.0		-0.704	-0.924	-1.041	-0.957	-1.010
33.0		-0.903	-0.868	-1.000	-0.017	-0.832
54.0		-0.043	-1.226	-0.000	2.473	-1.150
68.0		-0.340	-4.300	-1.461	-1.272	-1.483
78.5		-0.275	-5.454	-2.300	-2.306	-2.225
79.5		-145.705	-88.104	-1.502	84.131	44.202
80.5		-14.024	-11.400	0.250	-1.500	0.000
81.5		-5.507	-0.981	-1.724	-1.205	-1.436
82.0		5.052	-1.046	-0.716	-1.500	-1.548
84.0		-11.051	-7.204	-2.000	-1.000	-1.250
87.0		0.000	-0.079	-2.030	-2.100	-2.112
88.0		-3.205	-3.105	-2.245	-2.470	-2.500
93.0		-1.077	-1.712	-2.573	-2.757	-0.100
98.0		-1.300	-2.410	-1.000	-2.300	-2.475
100.0		-2.416	-3.000	-1.057	-1.407	-2.000
2.5	ILOWER	0.102	0.240	0.230	0.220	0.217
5.0		0.000	-0.020	0.101	0.271	0.235
10.0		-0.030	0.004	0.002	0.154	0.102
24.0		-0.000	-0.150	0.000	0.034	-0.000
33.0		-0.240	-0.073	0.070	0.100	-0.404
54.0		-0.115	0.150	0.150	0.024	-4.102
73.5		0.000	0.540	0.017	-0.003	0.415
84.0		0.473	0.500	-2.470	0.352	0.203
98.0		0.200	0.107	0.261	0.070	-0.233

WING PRESSURE COEFFICIENTS

RUN 305 POINT 6 ALPHA 8.00 PSI 0.00 HEIGHT 88.33

X/C, %		DP 2	DP 6	DP 12	DP 16	DP 22
0.0	UPPER	-2.112	-2.500	-3.403	-2.770	-2.013
2.5		-1.507	-2.507	-3.078	-2.443	-1.722
5.0		-1.230	-1.742	-2.105	-2.410	-1.720
10.0		-1.002	-1.370	-2.750	-2.340	-1.707
15.0		-0.004	-1.105	-1.044	-2.320	-1.007
24.0		-0.000	-1.144	-1.014	-1.000	-1.575
33.0		-0.721	-1.014	-1.124	-1.313	-1.270
54.0		-0.704	-1.200	-0.042	2.103	-1.405
68.0		-0.340	-2.000	-1.546	-1.214	-1.500
78.5		-0.201	-5.004	-2.435	-2.904	-2.473
79.5		-145.030	-84.000	-1.500	82.001	44.000
80.5		-14.001	-11.044	0.101	-1.400	0.002
81.5		-5.537	-0.504	-1.500	-1.200	-1.370
82.0		5.122	-1.210	-0.004	-1.502	-1.561
84.0		-11.000	-7.742	-2.073	-1.710	-1.304
87.0		1.160	-7.210	-2.413	-1.002	-2.300
88.0		-3.100	-3.015	-2.573	-1.572	-1.575
93.0		-1.750	-1.310	-2.302	-1.520	-0.240
98.0		-2.002	-2.007	-1.700	-1.007	-1.602
100.0		-2.340	-3.007	-1.305	-1.040	-1.737
2.5	ILOWER	0.240	0.300	0.202	0.220	0.100
5.0		0.170	0.004	0.211	0.237	0.240
10.0		0.000	0.200	0.190	0.230	0.195
24.0		-0.004	-0.050	0.000	0.005	-0.047
33.0		-0.203	-0.011	0.000	0.240	-0.510
54.0		-0.000	0.170	0.100	0.002	-4.000
73.5		0.030	0.533	0.013	0.042	0.372
84.0		0.400	0.000	-1.043	0.220	0.200
98.0		0.270	0.207	0.317	-0.002	-0.237

RUN 305 POINT 7 ALPHA 11.95 PSI 0.00 HEIGHT 87.70

X/C, %		DP 2	DP 6	DP 12	DP 16	DP 22
0.0	UPPER	-2.021	-4.017	-2.001	-2.223	-1.720
2.5		-2.311	-4.300	-2.014	-2.200	-1.000
5.0		-1.021	-4.750	-2.021	-2.103	-1.000
10.0		-1.203	-1.043	-3.072	-2.077	-1.000
15.0		-1.000	-1.070	-3.072	-2.123	-1.000
24.0		-1.011	-1.110	-2.207	-2.001	-1.572
33.0		-0.751	-0.077	-1.470	-1.007	-1.400
54.0		-0.010	-1.271	-0.704	2.044	-1.000
68.0		-0.207	-4.403	-1.220	-1.317	-1.500
78.5		-0.244	-5.470	-2.202	-1.700	-1.413
79.5		-144.000	-88.500	-1.404	82.001	40.030
80.5		-14.047	-11.400	0.107	-1.500	0.001
81.5		-5.417	-0.404	-1.500	-1.270	-1.372
82.0		5.230	-1.305	-0.030	-1.057	-1.504
84.0		-11.043	-7.317	-2.372	-1.190	-1.303
87.0		1.000	-0.030	-1.702	-1.300	-1.740
88.0		-2.132	-2.054	-1.000	-1.422	-1.302
93.0		-1.700	-1.102	-1.500	-1.400	-0.751
98.0		-2.050	-1.034	-1.270	-1.300	-1.210
100.0		-2.330	-3.070	-1.223	-1.010	-1.400
2.5	ILOWER	0.440	0.350	0.303	0.344	0.305
5.0		0.202	0.240	0.301	0.424	0.235
10.0		0.201	0.344	0.320	0.347	0.230
24.0		0.120	0.000	0.103	0.207	0.001
33.0		-0.000	0.111	0.190	0.331	-0.479
54.0		-0.010	0.245	0.200	0.151	-4.042
73.5		0.071	0.503	0.070	0.073	0.457
84.0		0.527	0.005	-1.225	0.300	0.330
98.0		0.200	0.260	0.330	0.024	-0.133

WING PRESSURE COEFFICIENTS

RUN 305 POINT 10 ALPHA 22.04 PSI 0.00 HEIGHT 98.20

X/C, %		DP 2	DP 6	DP 12	DP 16	DP 22
0.0	UPPER	-5.110	-3.513	-2.546	-2.070	-1.777
2.5		-5.002	-3.473	-2.500	-2.110	-1.750
5.0		-4.303	-3.300	-2.463	-2.107	-1.783
10.0		-3.001	-3.370	-2.563	-2.006	-1.772
15.0		-2.120	-3.142	-2.560	-2.052	-1.807
24.0		-1.050	-2.704	-2.400	-1.870	-1.729
33.0		-1.214	-2.107	-2.520	-2.011	-1.977
54.0		-0.720	-1.374	-1.804	2.052	-1.700
65.0		-0.425	-3.100	-1.637	-1.007	-1.825
75.5		-0.300	-4.007	-1.740	-1.715	-1.754
79.5		-141.422	-84.740	-1.410	80.035	46.007
80.5		-14.477	-11.634	0.222	-1.522	-0.032
81.5		-5.203	-0.453	-1.543	-1.242	-1.220
82.0		5.003	-0.227	-0.507	-1.403	-1.032
84.0		-11.096	-6.340	-1.020	-1.206	-1.207
87.0		1.184	-5.611	-1.533	-1.003	-2.177
88.0		-2.363	-2.021	-1.547	-1.884	-1.841
93.0		-2.030	-1.770	-1.802	-1.700	-0.279
96.0		-2.250	-2.777	-1.340	-1.005	-1.066
100.0		-2.202	-3.007	-1.370	-1.296	-1.781
2.5	LOWER	0.448	0.190	0.007	0.123	-0.025
5.0		0.514	0.205	0.254	0.205	0.230
10.0		0.430	0.332	0.375	0.370	0.250
24.0		0.270	0.290	0.200	0.200	0.121
33.0		0.014	0.206	0.250	0.450	-0.503
54.0		0.041	0.304	0.307	0.105	-3.911
73.5		0.701	0.903	0.617	0.161	0.246
84.0		0.472	0.704	-1.543	0.310	0.203
96.0		0.390	0.253	0.290	-0.040	-0.201

RUN 306 POINT 4 ALPHA 4.00 PSI 0.00 HEIGHT 87.02

X/C, %		DP 2	DP 6	DP 12	DP 16	DP 22
0.0	UPPER	-0.403	-1.267	-2.147	-2.575	-2.021
2.5		-1.021	-1.100	-1.404	-1.743	-2.575
5.0		-0.735	-0.974	-1.210	-1.340	-1.470
10.0		-0.000	-0.002	-1.100	-1.071	-1.113
15.0		-0.027	-0.751	-0.901	-0.976	-0.007
24.0		-0.012	-0.006	-0.022	-0.700	-0.007
33.0		-0.515	-0.021	-0.000	-0.733	-0.003
54.0		0.150	-0.020	-0.745	1.041	-0.000
65.0		-0.150	-2.075	-1.131	-1.007	-1.101
75.5		-0.110	-4.150	-1.000	-1.020	-2.007
79.5		-87.903	-80.057	-0.190	29.000	15.404
80.5		-0.300	-7.004	0.720	-0.150	0.050
81.5		-4.100	0.300	-0.170	0.010	-0.001
82.0		1.234	-1.007	-0.043	-0.211	-0.104
84.0		-0.767	-4.540	-1.020	-1.523	-0.023
87.0		-0.030	-4.004	-1.050	-1.752	-2.500
88.0		-2.056	-2.110	-1.774	-1.037	-2.274
93.0		-1.150	-1.295	-1.004	-2.140	-0.079
96.0		-1.207	-1.963	-1.500	-1.000	-2.177
100.0		-0.007	-1.906	-1.075	-1.944	-1.002
2.5	LOWER	0.321	0.357	0.363	0.437	0.302
5.0		0.213	0.152	0.257	0.377	0.340
10.0		0.132	0.237	0.235	0.254	0.222
24.0		0.071	0.004	0.130	0.140	0.007
33.0		-0.010	0.001	0.140	0.235	-0.235
54.0		0.105	0.240	0.294	0.104	-1.452
73.5		0.002	0.617	0.863	0.505	0.431
84.0		0.534	0.002	-2.232	0.500	0.400
96.0		0.440	0.300	0.300	0.134	-0.000

RUN 306 POINT 2 ALPHA 0.02 PSI 0.00 HEIGHT 88.95

X/C, %		DP 2	DP 6	DP 12	DP 16	DP 22
0.0	UPPER	0.300	0.042	-0.290	-0.410	-0.070
2.5		-0.490	-0.705	-0.937	-1.011	-1.000
5.0		-0.437	-0.500	-0.700	-0.630	-0.010
10.0		-0.433	-0.504	-0.740	-0.000	-0.735
15.0		-0.400	-0.523	-0.715	-0.004	-0.001
24.0		-0.054	-0.536	-0.000	-0.507	-0.507
33.0		-0.300	-0.540	-0.050	-0.500	-0.532
54.0		0.120	-0.020	-0.020	1.027	-0.782
65.0		-0.115	-2.375	-1.017	-0.000	-1.000
75.5		-0.007	-4.010	-1.770	-1.002	-2.107
79.5		-86.237	-57.700	-0.104	29.500	16.775
80.5		-0.230	-7.023	0.2[illegible]	-0.221	0.630
81.5		-4.201	0.322	-0.100	-0.027	-0.077
82.0		1.103	-1.752	-0.533	-0.242	-0.101
84.0		-0.717	-4.410	-1.404	-1.412	-0.035
87.0		-0.110	-4.020	-1.400	-1.005	-2.000
88.0		-2.000	-2.013	-1.500	-1.000	-2.205
93.0		-1.124	-1.153	-1.070	-2.070	-0.047
96.0		-1.220	-1.501	-1.417	-1.040	-1.010
100.0		-0.633	-1.000	-1.553	-1.570	-1.000
2.5	LOWER	0.102	0.172	0.224	0.300	0.207
5.0		0.040	0.020	0.000	0.235	0.205
10.0		0.032	0.000	0.100	0.125	0.110
24.0		0.007	-0.023	0.000	0.000	0.020
33.0		-0.000	0.050	0.100	0.212	-0.200
54.0		0.110	0.27[illegible]	0.205	0.224	-1.400
73.5		0.070	0.044	0.053	0.500	0.404
84.0		0.013	0.075	-1.000	0.520	0.434
96.0		0.405	0.400	0.310	0.190	0.100

RUN 306 POINT 6 ALPHA 8.07 PSI 0.00 HEIGHT 88.30

X/C, %		DP 2	DP 6	DP 12	DP 16	DP 22
0.0	UPPER	-2.012	-3.945	-3.400	-3.121	-1.923
2.5		-1.420	-2.174	-2.761	-2.754	-1.063
5.0		-1.170	-1.524	-2.447	-2.700	-1.073
10.0		-0.907	-1.230	-1.001	-2.070	-1.023
15.0		-0.047	-1.036	-1.371	-2.200	-1.000
24.0		-0.704	-0.034	-1.030	-1.233	-1.400
33.0		-0.053	-0.056	-1.014	-0.073	-1.330
54.0		0.175	-1.002	-0.027	1.000	-1.300
65.0		-0.170	-2.533	-1.200	-1.115	-1.475
75.5		-0.135	-4.470	-2.014	-2.002	-2.300
79.5		-90.711	-60.100	-0.130	29.570	20.137
80.5		-0.611	-0.441	0.725	-0.130	0.020
81.5		-4.330	0.311	-0.100	0.017	-0.015
82.0		1.230	-2.040	-1.000	-0.150	-0.142
84.0		-0.004	-4.007	-2.217	-1.023	-0.047
87.0		-0.017	-4.443	-2.190	-1.020	-2.227
88.0		-2.110	-2.000	-2.230	-1.051	-1.000
93.0		-1.267	-1.004	-2.157	-1.004	-0.005
96.0		-1.370	-1.354	-1.715	-1.715	-1.001
100.0		-0.504	-1.075	-1.070	-1.040	-1.035
2.5	LOWER	0.440	0.472	0.417	0.400	0.353
5.0		0.247	0.290	0.302	0.470	0.302
10.0		0.270	0.300	0.390	0.370	0.270
24.0		0.170	0.147	0.234	0.230	0.000
33.0		0.000	0.107	0.230	0.324	-0.253
54.0		0.150	0.290	0.321	0.231	-1.450
73.5		0.033	0.675	0.000	0.534	0.402
84.0		0.050	0.040	-1.000	0.523	0.370
96.0		0.400	0.441	0.373	0.174	-0.001

WING PRESSURE COEFFICIENTS

RUN 306 POINT 7 ALPHA 11.90 PSI 0.00 HEIGHT 07.16

X/C. %		DP 2	DP 6	DP 12	DP 16	DP 22
0.0	(UPPER)	-3.067	-4.000	-2.843	-2.132	-1.818
2.5		-2.100	-4.381	-2.000	-2.133	-1.580
5.0		-1.067	-4.511	-2.007	-2.116	-1.583
10.0		-1.240	-0.000	-2.040	-2.036	-1.564
15.0		-1.045	-0.000	-2.000	-2.046	-1.570
24.0		-0.027	-0.070	-2.174	-2.000	-1.464
33.0		-0.741	-0.001	-1.373	-1.034	-1.362
54.0		0.107	-1.007	-0.702	1.007	-1.417
65.0		-0.172	-3.257	-1.000	-1.231	-1.413
73.5		-0.141	-4.531	-2.071	-1.003	-1.304
79.5		-90.210	-65.144	-0.135	28.031	21.006
80.5		-0.060	-0.195	0.147	-0.116	-0.602
81.5		-4.201	0.200	-0.120	0.005	-0.050
82.0		1.204	-2.103	-1.122	-0.105	-0.170
84.0		-0.004	-4.011	-2.157	-1.134	-0.075
87.0		-0.010	-4.275	-1.001	-1.207	-1.520
88.0		-2.121	-1.000	-1.520	-1.225	-1.210
93.0		-1.300	-0.010	-1.304	-1.233	-0.000
96.0		-1.424	-1.102	-1.105	-1.307	-1.224
100.0		-0.500	-1.700	-0.004	-1.040	-1.245
2.5	(LOWER)	0.573	0.400	0.421	0.450	0.331
5.0		0.500	0.200	0.444	0.513	0.421
10.0		0.400	0.402	0.444	0.443	0.204
24.0		0.271	0.244	0.322	0.312	0.157
33.0		0.150	0.242	0.300	0.275	-0.257
54.0		0.212	0.347	0.350	0.275	-1.444
73.5		0.040	0.075	0.701	0.537	0.440
84.0		0.000	0.050	-1.301	0.542	0.410
96.0		0.527	0.445	0.300	0.105	0.001

RUN 306 POINT 10 ALPHA 22.01 PSI 0.00 HEIGHT 00.15

X/C. %		DP 2	DP 6	DP 12	DP 16	DP 22
0.0	(UPPER)	-5.340	-3.100	-3.372	-1.050	-1.020
2.5		-4.333	-3.143	-2.370	-1.003	-1.010
5.0		-3.000	-3.000	-2.324	-1.070	-1.036
10.0		-3.070	-3.057	-2.327	-1.000	-1.015
15.0		-2.204	-2.003	-2.304	-1.014	-1.043
24.0		-1.000	-2.020	-2.200	-1.000	-1.001
33.0		-1.245	-2.200	-2.200	-1.004	-1.513
54.0		0.210	-1.205	-1.700	1.033	-1.004
65.0		-0.200	-2.000	-1.743	-1.700	-1.020
73.5		-0.241	-3.310	-1.570	-1.001	-1.010
79.5		-00.407	-54.005	-0.100	31.043	21.542
80.5		-5.440	-7.430	0.277	-0.075	-0.000
81.5		-4.301	0.400	-0.035	0.000	-0.000
82.0		1.150	-1.345	-0.020	-0.120	-0.140
84.0		-0.074	-4.030	-1.400	-1.203	0.030
87.0		-0.157	-4.037	-1.312	-1.444	-1.025
88.0		-2.300	-2.130	-1.300	-1.051	-1.531
93.0		-1.015	-1.440	-1.420	-1.540	-0.100
96.0		-1.745	-1.040	-1.272	-1.407	-1.503
100.0		-0.505	-1.705	-1.235	-1.202	-1.000
2.5	(LOWER)	0.044	0.307	0.200	0.250	0.137
5.0		0.730	0.351	0.457	0.405	0.300
10.0		0.030	0.553	0.550	0.520	0.300
24.0		0.430	0.420	0.403	0.430	0.230
33.0		0.311	0.407	0.412	0.470	-0.350
54.0		0.304	0.444	0.430	0.323	-1.337
73.5		0.971	0.703	0.005	0.007	0.300
84.0		0.077	1.000	-1.504	0.500	0.320
96.0		0.505	0.407	0.341	0.172	-0.173

WING PRESSURE COEFFICIENTS

RUN 307 POINT 2 ALPHA 6.02 PSI 0.00 HEIGHT 00.31

X/C. %		DP 2	DP 6	DP 12	DP 16	DP 22
0.0	(UPPER)	0.370	0.150	-0.127	-0.250	-0.474
2.5		-0.415	-0.505	-0.014	-0.005	-0.050
5.0		-0.371	-0.515	-0.000	-0.743	-0.000
10.0		-0.300	-0.515	-0.043	-0.040	-0.054
15.0		-0.301	-0.472	-0.005	-0.003	-0.005
24.0		-0.305	-0.400	-0.530	-0.521	-0.530
33.0		-0.271	-0.407	-0.541	-0.516	-0.470
54.0		0.014	-0.070	-0.504	1.400	-0.005
65.0		-0.000	-2.100	-0.077	-0.751	-0.005
73.5		-0.057	-2.202	-1.050	-1.403	-2.027
79.5		-90.193	-65.004	0.400	14.010	7.004
80.5		-5.003	-5.571	0.204	0.445	0.030
81.5		-3.341	0.712	0.470	0.574	0.520
82.0		-0.533	-1.002	-0.540	0.401	0.400
84.0		-4.205	-2.072	-1.170	-1.102	0.504
87.0		-0.440	-2.570	-1.300	-1.371	-2.302
88.0		-1.370	-1.052	-1.270	-1.402	-2.113
93.0		-0.070	-0.070	-1.310	-1.005	-0.030
96.0		-0.025	-1.007	-1.101	-1.472	-1.507
100.0		-0.000	-1.013	-1.100	-1.205	-1.070
2.5	(LOWER)	0.151	0.101	0.205	0.317	0.290
5.0		0.100	0.070	0.100	0.234	0.210
10.0		0.001	0.115	0.130	0.151	0.120
24.0		0.051	0.040	0.000	0.111	0.040
33.0		0.020	0.105	0.140	0.104	-0.100
54.0		0.105	0.201	0.300	0.274	-0.175
73.5		0.003	0.500	0.622	0.037	0.400
84.0		0.030	1.000	-1.753	0.571	0.402
96.0		0.521	0.510	0.330	0.244	0.104

RUN 307 POINT 4 ALPHA 3.00 PSI 0.00 HEIGHT 00.00

X/C. %		DP 2	DP 6	DP 12	DP 16	DP 22
0.0	(UPPER)	-0.377	-1.000	-1.000	-2.425	-2.700
2.5		-0.005	-1.000	-1.374	-1.500	-1.070
5.0		-0.003	-0.070	-1.103	-1.700	-1.370
10.0		-0.011	-0.775	-0.002	-0.002	-1.026
15.0		-0.043	-0.074	-0.044	-0.070	-0.001
24.0		-0.023	-0.017	-0.700	-0.712	-0.710
33.0		-0.471	-0.574	-0.000	-0.007	-0.010
54.0		0.017	-0.753	-0.070	1.473	-0.730
65.0		-0.001	-2.130	-0.004	-0.002	-0.040
73.5		-0.050	-3.420	-1.000	-1.503	-2.254
79.5		-90.007	-60.000	0.403	14.152	8.000
80.5		-5.030	-5.567	0.270	0.477	0.030
81.5		-3.340	0.705	0.400	0.502	0.540
82.0		-0.510	-2.003	-0.003	0.457	0.470
84.0		-4.212	-3.004	-1.310	-1.203	0.500
87.0		-0.410	-2.074	-1.300	-1.441	-2.170
88.0		-1.307	-1.530	-1.442	-1.550	-1.007
93.0		-0.014	-1.000	-1.303	-1.000	-0.007
96.0		-0.077	-1.114	-1.353	-1.572	-1.040
100.0		-0.715	-0.909	-1.304	-1.210	-1.004
2.5	(LOWER)	0.410	0.427	0.400	0.407	0.450
5.0		0.300	0.340	0.305	0.430	0.307
10.0		0.275	0.332	0.305	0.321	0.273
24.0		0.150	0.152	0.205	0.213	0.110
33.0		0.115	0.100	0.217	0.200	-0.100
54.0		0.230	0.321	0.347	0.200	-0.101
73.5		0.071	0.053	0.637	0.044	0.402
84.0		0.742	1.023	-1.002	0.000	0.470
96.0		0.550	0.525	0.312	0.210	0.035

WING PRESSURE COEFFICIENTS

RUN 307 POINT 6 ALPHA 7.00 PSI 0.00 HEIGHT 04.36

X/C. %		DP 2	DP 6	DP 12	DP 16	DP 22
0.0	UPPER	-1.077	-3.406	-4.921	-3.402	-1.053
2.5		-1.274	-1.083	-2.424	-3.634	-1.017
5.0		-1.075	-1.402	-1.040	-3.634	-1.000
10.0		-0.910	-1.118	-1.452	-2.001	-1.067
15.0		-0.000	-0.040	-1.223	-1.700	-1.530
24.0		-0.710	-0.014	-0.004	-0.000	-1.435
33.0		-0.021	-0.750	-0.011	-0.700	-1.205
54.0		0.026	-0.078	-0.004	1.405	-1.100
65.0		-0.075	-2.000	-1.171	-1.010	-1.250
75.5		-0.000	-3.015	-2.115	-2.002	-2.202
79.5		-40.530	-40.544	0.522	1.204	2.500
80.5		-5.040	-5.312	0.200	0.503	0.010
81.5		-3.401	0.724	0.547	0.005	0.002
82.0		-0.504	-2.136	-0.033	0.513	0.004
84.0		-4.210	-3.221	-1.002	-1.030	0.505
87.0		-0.420	-2.010	-1.701	-2.013	-2.050
88.0		-1.303	-1.520	-1.050	-1.009	-1.002
93.0		-0.033	-0.005	-1.002	-1.030	-0.032
95.0		-0.005	-0.001	-1.505	-1.075	-1.720
100.0		-0.047	-0.011	-1.147	-0.050	-1.030
2.5	LOWER	0.053	0.531	0.405	0.520	0.445
5.0		0.456	0.377	0.474	0.534	0.436
10.0		0.350	0.400	0.432	0.441	0.330
24.0		0.340	0.250	0.200	0.302	0.145
33.0		0.100	0.305	0.300	0.332	-0.125
54.0		0.315	0.301	0.374	0.312	-0.195
73.5		0.053	0.005	0.000	0.005	0.403
84.0		0.700	1.046	-1.700	0.377	0.432
96.0		0.571	0.543	0.307	0.264	0.013

RUN 307 POINT 7 ALPHA 12.03 PSI 0.00 HEIGHT 07.50

X/C. %		DP 2	DP 6	DP 12	DP 16	DP 22
0.0	UPPER	-4.102	-4.011	-3.220	-2.454	-1.075
2.5		-2.146	-4.503	-3.200	-2.402	-1.002
5.0		-1.503	-4.340	-3.230	-2.470	-1.066
10.0		-1.254	-1.010	-3.107	-2.400	-1.045
15.0		-1.050	-1.011	-2.035	-2.515	-1.020
24.0		-0.002	-0.030	-1.033	-2.440	-1.777
33.0		-0.702	-0.020	-1.020	-2.104	-1.700
54.0		0.000	-0.002	-0.700	1.513	-1.070
65.0		-0.051	-2.407	-1.100	-1.152	-1.020
75.5		-0.000	-3.000	-3.500	-2.045	-2.077
79.5		-40.500	-50.500	0.547	-0.401	3.341
80.5		-5.000	-5.013	0.140	0.541	0.012
81.5		-3.532	0.740	0.541	3.020	0.504
82.0		-0.047	-2.500	-1.547	0.543	0.545
84.0		-4.251	-3.010	-2.340	-2.020	0.010
87.0		-0.300	-2.000	-2.031	-1.724	-1.007
88.0		-1.410	-1.540	-1.700	-1.540	-1.040
93.0		-0.000	-0.725	-1.201	-1.214	-0.040
95.0		-1.040	-0.721	-0.024	-0.000	-1.743
100.0		-0.500	-0.073	-0.451	-0.000	-1.050
2.5	LOWER	0.520	0.540	0.401	0.401	0.372
5.0		0.500	0.505	0.551	0.500	0.404
10.0		0.510	0.500	0.524	0.513	0.402
24.0		0.353	0.355	0.300	0.306	0.227
33.0		0.254	0.350	0.307	0.410	-0.120
54.0		0.330	0.420	0.430	0.371	-0.124
73.5		1.012	0.750	0.710	0.001	0.305
84.0		0.760	1.070	-1.700	0.501	0.307
96.0		0.615	0.602	0.505	0.324	-0.030

WING PRESSURE COEFFICIENTS

RUN 307 POINT 10 ALPHA 22.00 PSI 0.00 HEIGHT 02.04

X/C. %		DP 2	DP 6	DP 12	DP 16	DP 22
0.0	UPPER	-4.045	-2.000	-2.107	-1.070	-1.532
2.5		-3.001	-2.043	-2.700	-1.000	-1.530
5.0		-3.505	-2.753	-2.100	-1.000	-1.520
10.0		-2.040	-2.700	-2.151	-1.024	-1.500
15.0		-2.420	-2.001	-2.130	-1.022	-1.532
24.0		-1.730	-2.444	-2.100	-1.700	-1.504
33.0		-1.207	-2.150	-2.007	-1.702	-1.402
54.0		0.001	-1.305	-1.754	1.503	-1.007
65.0		-0.173	-1.405	-1.050	-1.071	-1.494
75.5		-0.100	-2.020	-1.520	-1.510	-1.407
79.5		-50.212	-20.050	0.500	4.402	4.431
80.5		-5.100	-4.000	0.301	0.570	-0.004
81.5		-3.011	0.703	0.010	0.000	0.500
82.0		-0.744	-1.040	-0.575	0.017	0.570
84.0		-4.442	-2.020	-1.270	-1.347	0.050
87.0		-0.031	-2.700	-1.204	-1.403	-1.500
88.0		-1.702	-1.700	-1.330	-1.470	-1.405
93.0		-1.319	-1.247	-1.331	-1.400	-0.150
95.0		-1.406	-1.307	-1.750	-1.020	-1.475
100.0		-0.422	-0.700	-1.133	-1.201	-1.500
2.5	LOWER	0.005	0.400	0.342	0.312	0.211
5.0		0.777	0.630	0.537	0.534	0.412
10.0		0.001	0.530	0.500	0.500	0.420
24.0		0.402	3.500	0.510	0.400	0.203
33.0		0.412	0.473	0.470	0.453	-0.220
54.0		0.300	0.400	0.470	0.302	-0.002
73.5		1.050	0.751	0.704	0.1121	0.301
84.0		0.704	1.111	-1.020	0.278	0.300
96.0		0.052	0.500	0.357	0.100	-0.035

RUN 315 POINT 2 ALPHA -0.02 PSI 0.01 HEIGHT 00.72

X/C. %		DP 2	DP 6	DP 12	DP 16	DP 22
0.0	UPPER	-2.040	-2.100	-3.190	-1.220	0.044
2.5		0.041	0.007	0.107	-0.031	-0.100
5.0		0.000	0.177	0.000	-0.440	-1.015
10.0		0.527	0.010	-0.140	-0.100	0.700
15.0		0.230	0.201	-0.700	-0.121	-1.251
24.0		0.300	-0.100	-0.004	0.337	-0.300
33.0		-0.102	-0.305	-0.570	-0.570	-0.710
54.0		-2.300	-0.013	-0.001	12.033	-0.010
65.0		0.014	-3.190	-0.717	-1.071	-2.103
75.5		0.322	-5.031	-1.007	-2.270	-2.501
79.5		-257.000	-145.310	0.070	330.000	73.500
80.5		-21.000	-12.404	2.505	11.040	3.307
81.5		1.017	5.405	7.027	9.000	15.103
82.0		20.070	1.301	-1.230	5.010	10.033
84.0		-15.435	-7.213	-12.507	2.305	4.107
87.0		4.435	-9.723	-0.000	3.514	-9.437
88.0		-5.202	-4.554	-2.304	-2.730	-2.703
93.0		-2.021	-1.704	-2.157	-1.475	-0.424
95.0		-2.075	-4.302	-0.053	-1.033	-2.452
100.0		-4.040	-4.770	-1.003	-1.343	-1.000
2.5	LOWER	-1.004	-2.270	-4.140	-3.002	-1.372
5.0		-1.004	-3.005	-3.020	-2.511	-0.753
10.0		-2.071	-2.047	-3.017	-2.300	-0.305
24.0		-2.477	-3.114	-2.070	-0.005	-0.407
33.0		-2.435	-2.273	-1.032	-0.055	-0.401
54.0		-1.103	-1.230	-0.000	-0.730	-2.724
73.5		2.220	-0.000	-0.029	-3.407	0.207
84.0		-0.040	-1.073	-1.715	0.033	0.230
96.0		-1.401	-0.015	0.403	0.553	0.000

WING PRESSURE COEFFICIENTS

RUN 315 POINT 4 ALPHA 4.00 PSI 0.01 HEIGHT 00.00

X/C, %		DP 2	DP 6	DP 12	DP 16	DP 22
0.0	UPPER	-2.400	-2.004	-2.000	0.000	0.004
2.5		0.000	0.100	0.230	-0.250	-1.263
5.0		0.005	0.244	0.152	-0.004	-1.700
10.0		0.567	0.121	-0.083	-0.247	-0.201
15.0		0.323	0.200	-0.704	-0.311	-1.530
24.0		0.400	-0.047	-0.041	0.103	-0.400
33.0		0.004	-0.202	-0.017	-0.001	-0.001
54.0		-2.070	-0.220	-0.063	11.614	-1.040
65.0		0.630	-0.007	-0.770	-1.122	-2.147
75.5		0.251	-0.057	-2.340	-3.630	-3.250
79.5		-240.000	-141.040	0.500	300.254	00.300
80.5		-20.000	-13.005	2.017	10.307	3.124
81.5		0.405	5.100	7.190	0.404	14.250
82.0		10.707	0.044	-1.304	5.630	10.142
84.0		-10.577	-0.030	-12.070	1.000	0.054
87.0		4.140	-0.044	-0.343	0.040	-0.333
88.0		-4.040	-4.047	-3.004	-2.400	-2.404
93.0		-1.042	-1.200	-2.020	-1.905	-0.302
95.0		-2.510	-2.002	-1.004	-1.700	-2.700
100.0		-0.514	-0.042	-0.042	-1.017	-1.454
2.5	LOWER	-1.032	-2.154	-2.700	-2.201	-0.215
5.0		-1.007	-2.700	-3.504	-1.001	0.022
10.0		-2.000	-2.500	-2.610	-1.942	0.100
24.0		-2.101	-2.006	-1.006	-0.550	-0.230
33.0		-2.301	-2.230	-1.032	-0.025	-0.050
54.0		-1.130	-1.100	-0.504	-0.307	-2.307
73.5		2.220	-0.210	0.547	-2.003	0.402
84.0		0.122	-1.700	-2.001	0.030	0.475
95.0		-1.530	-0.130	0.000	1.052	0.220

RUN 315 POINT 7 ALPHA 11.00 PSI 0.01 HEIGHT 00.70

X/C, %		DP 2	DP 6	DP 12	DP 16	DP 22
0.0	UPPER	-2.314	-2.030	-2.043	-1.100	0.100
2.5		0.000	-0.100	-0.320	-0.002	-2.125
5.0		0.044	0.000	0.017	-1.172	-2.070
10.0		0.540	-0.041	-0.023	-0.711	-0.012
15.0		0.300	-0.430	-0.030	-0.070	-2.211
24.0		0.517	-0.140	-1.020	-0.143	-0.022
33.0		-0.037	-0.310	-0.047	-1.000	-1.100
54.0		-2.704	-0.001	-1.104	12.005	-1.301
65.0		-0.004	-0.370	-1.011	-1.517	-2.530
75.5		0.307	-0.003	-2.230	-2.700	-3.002
79.5		-207.500	-100.111	0.017	200.070	70.071
80.5		-20.530	-15.037	2.013	11.074	3.313
81.5		1.073	0.333	7.410	0.025	15.204
82.0		21.500	-0.200	-1.330	0.002	10.005
84.0		-10.732	-0.570	-12.010	3.705	0.101
87.0		5.002	-10.300	-0.130	0.004	-0.001
88.0		-4.752	-3.020	-2.721	-2.771	-2.740
93.0		-1.520	-0.921	-2.004	-1.013	-0.500
95.0		-2.107	-2.001	-1.445	-2.340	-2.201
100.0		-4.070	-5.222	-2.000	-2.300	-1.000
2.5	LOWER	-1.433	-2.074	-1.000	-1.000	-0.000
5.0		-1.304	-2.513	-2.205	-2.010	-0.504
10.0		-2.502	-2.300	-1.004	-2.430	-0.450
24.0		-1.070	-2.041	-2.007	-1.225	-0.220
33.0		-2.220	-2.001	-2.175	-1.301	-0.000
54.0		-2.000	-2.003	-1.020	-1.720	-2.043
73.5		2.225	-1.374	-0.002	-2.010	0.720
84.0		-0.730	-1.904	-2.274	-0.001	0.002
95.0		-2.504	-1.310	-0.033	0.000	0.203

RUN 315 POINT 8 ALPHA 7.00 PSI 0.01 HEIGHT 00.57

X/C, %		DP 2	DP 6	DP 12	DP 16	DP 22
0.0	UPPER	-2.103	-2.050	-3.102	0.004	-0.013
2.5		0.101	0.037	0.723	-0.221	-2.200
5.0		0.050	0.302	0.400	-0.020	-2.420
10.0		0.000	0.100	-0.053	-0.527	-0.710
15.0		0.400	0.052	-0.700	-0.400	-1.227
24.0		0.500	-0.070	-0.013	0.000	-0.720
33.0		0.057	-0.272	-0.510	-0.750	-0.022
54.0		-2.042	-0.053	-0.023	11.703	-1.220
65.0		0.002	-0.1[illegible]	-0.722	-1.300	-2.303
75.5		0.203	-5.[illegible]	-2.305	-3.175	-4.000
79.5		-250.415	-14[illegible]	[illegible].234	297.044	00.557
80.5		-20.340	-14[illegible]	[illegible].042	10.31[illegible]	3.040
81.5		0.010	5.[illegible]	[illegible].070	0.24[illegible]	14.175
82.0		[illegible].300	0	1.210	5.73[illegible]	[illegible].024
84.0		-10.075	-6.[illegible]	-11.077	2.00[illegible]	[illegible].222
87.0		4.353	-0.500	-0.235	0.243	-5.005
88.0		-4.500	-3.073	-2.710	-2.002	-2.000
93.0		-1.007	-1.040	-2.003	-2.020	-0.331
95.0		-2.257	-3.050	-1.500	-2.300	-3.201
100.0		-7.067	-0.750	-1.075	-1.072	-1.001
2.5	LOWER	-1.354	-2.000	-3.700	-2.157	-0.010
5.0		-1.377	-2.500	-3.503	-1.010	0.157
10.0		-2.500	-2.334	-2.730	-1.017	0.210
24.0		-2.003	-2.015	-2.030	-0.541	-0.202
33.0		-2.211	-2.005	-1.701	-0.671	-0.400
54.0		-1.150	-1.170	-0.010	-0.050	-2.307
73.5		2.222	-0.446	0.425	-2.005	0.005
84.0		-0.172	-1.700	-2.453	0.003	1.120
95.0		-1.003	-0.007	0.100	0.001	0.520

RUN 315 POINT 10 ALPHA 21.00 PSI 0.01 HEIGHT 00.03

X/C, %		DP 2	DP 6	DP 12	DP 16	DP 22
0.0	UPPER	-2.022	-2.230	-2.020	-1.007	-1.010
2.5		-0.000	-0.500	-2.405	-2.047	-2.330
5.0		0.572	-0.210	-1.723	-2.021	-2.070
10.0		0.522	-0.101	-1.104	-2.044	-0.041
15.0		0.170	0.277	-1.050	-1.000	-2.311
24.0		0.305	-0.224	-1.441	-1.000	-1.152
33.0		-0.130	-0.351	-1.052	-1.740	-1.400
54.0		-2.232	-0.034	-1.042	12.013	-1.615
65.0		-0.225	-4.040	-0.704	-1.040	-2.031
75.5		-0.050	-5.020	-2.200	-2.471	-3.400
79.5		-200.340	-107.042	0.044	310.305	70.040
80.5		-21.330	-15.145	2.110	10.020	3.074
81.5		0.015	5.227	7.311	0.544	15.157
82.0		20.725	-0.525	-1.474	5.501	10.410
84.0		-10.007	-0.047	-12.042	2.777	5.004
87.0		4.103	-10.001	0.122	0.020	-5.200
88.0		-5.503	-4.002	-2.530	-2.414	-1.007
93.0		-2.127	-0.017	-2.343	-1.000	-0.040
95.0		-2.742	-3.140	-1.225	-2.000	-2.071
100.0		-4.007	-5.047	-2.417	-2.025	-1.537
2.5	LOWER	-1.703	-2.007	-2.200	-1.022	-0.703
5.0		-1.707	-2.020	-2.714	-2.170	-0.303
10.0		-2.001	-2.700	-2.200	-2.057	-0.110
24.0		-2.403	-2.001	-2.141	-1.100	-0.473
33.0		-2.002	-2.255	-2.200	-1.310	-0.000
54.0		-1.001	-1.030	-1.347	-0.020	-2.010
73.5		2.255	-0.077	-0.242	-2.005	0.000
84.0		-0.440	-2.040	-1.710	0.154	1.032
95.0		-2.275	-1.005	-0.205	0.400	0.502

WING PRESSURE COEFFICIENTS

RUN 316 POINT 3 ALPHA -0.01 PSI 0.01 HEIGHT 87.30

X/C %		DP 2	DP 6	DP 12	DP 16	DP 22
0.0	UPPER	-1.424	-1.298	-1.114	0.110	0.181
2.5		0.530	0.522	0.940	-0.075	-0.005
5.0		0.798	0.564	0.337	-0.330	-1.043
10.0		0.560	0.351	0.188	-0.415	-0.871
15.0		0.306	0.170	-0.358	-0.427	-0.880
24.0		0.231	-0.043	-0.440	-0.255	-0.860
33.0		-0.000	-0.217	-0.058	-0.500	-0.636
54.0		-1.050	-0.574	-0.729	3.262	-0.902
69.0		-0.204	-5.106	-1.023	-1.113	-1.260
78.5		-0.170	-4.760	-2.500	-3.114	-3.050
79.5		-101.242	-97.776	-1.490	3.260	5.086
80.5		-14.122	-12.067	-0.613	-0.852	-0.090
81.5		-4.109	-3.440	-1.730	-0.002	0.536
82.0		4.758	-1.144	-0.007	-1.141	-0.383
84.0		-11.410	-7.220	-3.050	-2.505	-0.410
87.0		1.411	-0.007	-2.207	-2.790	-2.963
88.0		-2.760	-2.776	-2.536	-2.450	-2.176
93.0		-1.082	-1.072	-2.012	-2.206	-0.346
96.0		-1.077	-2.022	-2.010	-1.956	-1.540
100.0		-3.633	-3.560	-0.772	-0.585	-0.942
2.5	LOWER	-1.096	-1.230	-1.060	-1.707	-0.224
5.0		-1.030	-1.420	-1.040	-1.502	-0.236
10.0		-1.440	-1.300	-1.423	-1.236	-0.200
24.0		-1.245	-1.512	-1.206	-0.814	-0.323
33.0		-1.447	-1.362	-1.180	-0.505	-0.417
54.0		-1.030	-0.004	-0.500	-0.153	-1.270
73.5		0.700	-0.215	0.360	-1.230	0.572
84.0		-0.136	-0.500	-1.722	0.044	0.546
96.0		-0.003	-0.240	0.406	0.705	0.357

RUN 316 POINT 4 ALPHA 2.01 PSI 0.00 HEIGHT 87.07

X/C %		DP 2	DP 6	DP 12	DP 16	DP 22
0.0	UPPER	-1.407	-1.377	-1.130	0.274	-0.236
2.5		0.053	0.502	0.021	-0.250	-1.415
5.0		0.700	0.508	0.300	-0.507	-1.420
10.0		0.402	0.270	0.025	-0.004	-0.022
15.0		0.201	0.202	-0.461	-0.027	-1.107
24.0		0.200	-0.042	-0.510	-0.478	-0.021
33.0		-0.052	-0.204	-0.743	-0.737	-0.742
54.0		-1.783	-0.731	-0.754	3.260	-1.015
69.0		-0.201	-5.447	-1.007	-1.106	-1.500
78.5		-0.212	-4.022	-2.312	-2.071	-4.012
79.5		-107.515	-102.747	-1.302	4.563	5.102
80.5		-14.200	-12.202	-0.150	-0.007	-0.022
81.5		-4.005	-3.413	-1.717	0.015	0.503
82.0		5.005	-1.005	-0.903	-1.221	-0.330
84.0		-11.730	-7.511	-2.031	-2.757	-0.341
87.0		1.537	-7.053	-2.130	-3.092	-3.025
88.0		-2.007	-2.001	-2.260	-2.607	-2.533
93.0		-1.301	-1.040	-2.290	-2.453	-0.440
96.0		-1.570	-2.000	-2.046	-2.295	-1.640
100.0		-3.734	-3.011	-1.043	-1.464	-1.225
2.5	LOWER	-1.155	-1.310	-1.734	-1.500	-0.137
5.0		-1.101	-1.467	-1.751	-1.304	-0.225
10.0		-1.542	-1.467	-1.470	-1.300	-0.300
24.0		-1.256	-1.475	-1.305	-0.007	-0.400
33.0		-1.420	-1.200	-1.256	-0.743	-0.431
54.0		-1.275	-1.000	-0.007	-0.514	-1.363
73.5		0.046	-0.571	0.125	-1.242	0.771
84.0		-0.435	-0.561	-2.032	0.077	0.870
96.0		-0.705	-0.035	-0.005	0.533	0.522

WING PRESSURE COEFFICIENTS

RUN 316 POINT 6 ALPHA 6.05 PSI 0.01 HEIGHT 87.72

X/C %		DP 2	DP 6	DP 12	DP 16	DP 22
0.0	UPPER	-1.344	-1.170	-1.210	-1.071	-0.531
2.5		0.505	0.332	-0.515	-0.021	-1.455
5.0		0.724	0.422	-0.343	-0.707	-1.202
10.0		0.470	0.204	-0.077	-0.716	-0.000
15.0		0.240	0.272	-0.403	-0.741	-1.000
24.0		0.210	0.021	-0.515	-0.040	-0.715
33.0		-0.045	-0.150	-0.730	-0.500	-0.044
54.0		-1.510	-0.505	-0.720	3.100	-0.707
69.0		-0.223	-3.302	-0.004	-1.123	-1.007
78.5		-0.137	-4.230	-1.000	-1.000	-1.001
79.5		-101.740	-00.753	-1.053	0.704	0.313
80.5		-12.722	-10.143	-0.501	-0.371	0.007
81.5		-3.004	-2.002	-1.302	0.153	0.140
82.0		5.070	-0.004	-0.744	-0.322	-0.137
84.0		-10.227	-7.410	-2.205	-1.574	-0.117
87.0		1.007	-0.053	-1.943	-1.000	-1.040
88.0		-2.205	-2.460	-1.001	-1.004	-1.004
93.0		-1.150	-0.505	-1.060	-1.474	-0.300
96.0		-1.245	-1.402	-1.425	-1.403	-1.050
100.0		-2.246	-2.530	-1.070	-1.547	-1.200
2.5	LOWER	-1.070	-1.102	-1.230	-1.311	-0.212
5.0		-1.014	-1.313	-1.311	-1.301	-0.304
10.0		-1.264	-1.301	-1.6[illegible]	-1.400	-0.300
24.0		-1.100	-1.250	-1.101	-1.121	-0.513
33.0		-1.402	-1.270	-1.300	-1.021	-0.307
54.0		-1.200	-1.232	-1.043	-0.004	-1.202
73.5		0.076	-0.720	-0.400	-1.070	0.547
84.0		-0.454	-0.310	-1.027	0.263	0.500
96.0		-0.630	-0.023	-0.360	0.011	0.210

RUN 316 POINT 7 ALPHA 12.04 PSI 0.01 HEIGHT 87.20

X/C %		DP 2	DP 6	DP 12	DP 16	DP 22
0.0	UPPER	-1.300	-1.105	-1.201	-1.304	-1.010
2.5		0.402	0.104	-1.210	-1.220	-1.072
5.0		0.001	0.313	-0.015	-1.271	-1.040
10.0		0.441	0.215	-0.040	-1.100	-0.000
15.0		0.210	0.141	-0.025	-1.152	-1.107
24.0		0.103	-0.007	-0.000	-1.044	-0.000
33.0		-0.100	-0.200	-0.061	-1.303	-0.041
54.0		-1.530	-0.550	-0.030	3.230	-0.010
69.0		-0.307	-3.007	-0.005	-1.347	-1.100
78.5		-0.217	-4.435	-1.011	-1.501	-1.072
79.5		-100.244	-100.031	-1.121	0.003	0.710
80.5		-13.317	-10.501	-0.012	-0.407	-0.020
81.5		-3.502	-3.040	-1.537	0.210	0.021
82.0		5.504	-1.271	-0.010	-0.005	-0.002
84.0		-10.030	-7.037	-2.473	-1.513	-0.171
87.0		1.030	-7.373	-1.503	-1.071	-1.002
88.0		-2.711	-2.563	-1.701	-1.004	-1.014
93.0		-1.406	-0.013	-1.713	-1.407	-0.404
96.0		-1.500	-1.443	-1.402	-1.436	-1.502
100.0		-1.000	-2.416	-1.744	-1.543	-1.107
2.5	LOWER	-1.071	-1.313	-1.353	-1.350	-0.200
5.0		-0.004	-1.357	-1.300	-1.437	-0.342
10.0		-1.304	-1.350	-1.100	-1.402	-0.315
24.0		-1.255	-1.430	-1.353	-1.140	-0.403
33.0		-1.503	-1.350	-1.370	-1.020	-0.433
54.0		-1.205	-1.240	-1.010	-0.700	-1.243
73.5		0.033	-0.051	-0.357	-1.141	0.574
84.0		-0.410	-0.303	-1.530	0.321	0.012
96.0		-0.771	-0.537	-0.261	0.070	0.244

WING PRESSURE COEFFICIENTS

RUN 316 POINT 10 ALPHA 22.01 PSI 0.01 HEIGHT 90.26

X/C. %		DP 2	DP 6	DP 12	DP 16	DP 22
0.0	UPPER	-1.105	-1.002	-1.400	-1.127	-2.402
2.5		0.416	-0.370	-1.050	-1.133	-2.272
5.0		0.502	-0.208	-1.540	-1.131	-1.763
10.0		0.304	-0.310	-1.440	-0.804	-1.000
15.0		0.050	-0.305	-1.700	-0.022	-1.005
24.0		-0.010	-0.430	-1.521	-0.007	-0.825
33.0		-0.201	-0.540	-1.580	-1.201	-0.066
54.0		-1.300	-0.710	-1.225	2.481	-0.940
65.0		-0.545	-3.170	-1.215	-1.305	-1.190
78.5		-0.470	-4.044	-2.710	-2.057	-1.050
79.5		-104.230	-123.040	-1.143	5.530	0.534
80.5		-14.060	-11.020	-0.263	-0.343	-0.250
81.5		-4.307	-2.005	-1.027	0.230	0.830
82.0		0.057	-1.770	-1.205	-0.017	-0.050
84.0		-11.003	-5.330	-2.104	-1.710	-0.115
87.0		0.545	-7.005	-1.080	-1.050	-1.701
90.0		-2.250	-2.705	-1.021	-1.505	-1.406
93.0		-2.040	-0.063	-1.107	-1.304	-0.004
96.0		-2.170	-1.450	-0.004	-1.103	-1.307
100.0		-1.451	-1.040	-0.700	-1.000	-1.002
2.5	LOWER	-0.054	-1.120	-1.340	-1.110	0.102
5.0		-0.047	-1.300	-1.322	-1.220	0.134
10.0		-1.253	-1.344	-1.122	-1.205	0.024
24.0		-1.211	-1.373	-1.220	-0.053	-0.202
33.0		-1.407	-1.250	-1.240	-0.701	-0.040
54.0		-0.000	-0.012	-0.001	-0.520	-1.170
73.5		0.001	-0.300	-0.070	-1.040	0.501
84.0		-0.107	-0.253	-1.315	0.270	0.524
96.0		-0.430	-0.150	-0.002	0.103	0.231

RUN 317 POINT 2 ALPHA 0.00 PSI 0.01 HEIGHT 87.75

X/C. %		DP 2	DP 6	DP 12	DP 16	DP 22
0.0	UPPER	-0.074	-0.033	-1.001	-0.563	0.300
2.5		0.715	0.071	0.100	-0.340	-0.000
5.0		0.707	0.717	0.203	-0.321	-0.700
10.0		0.500	0.477	0.156	-0.370	-0.502
15.0		0.420	0.337	-0.130	-0.413	-0.004
24.0		0.260	0.040	-0.250	-0.301	-0.510
33.0		0.027	-0.005	-0.403	-0.507	-0.504
54.0		-0.340	-0.447	-0.534	2.251	-0.500
65.0		-0.107	-3.170	-0.730	-0.701	-0.030
78.5		-0.001	-3.730	-1.013	-1.372	-1.015
79.5		-93.330	-73.300	0.041	3.754	2.002
80.5		-7.500	-7.100	-0.435	0.430	0.013
81.5		-2.072	-0.024	-0.000	0.754	1.040
82.0		1.001	-1.400	-0.570	0.141	0.500
84.0		-6.207	-4.300	-1.037	-1.202	0.514
87.0		0.630	-3.070	-1.100	-1.400	-2.107
90.0		-1.445	-1.040	-1.200	-1.340	-1.050
93.0		-0.003	-0.722	-1.215	-1.332	-0.107
96.0		-0.710	-1.210	-1.004	-1.204	-1.532
100.0		-1.250	-1.440	-1.330	-1.205	-0.940
2.5	LOWER	-0.731	-0.030	-0.000	-0.000	-0.333
5.0		-0.743	-0.070	-0.000	-0.045	-0.370
10.0		-0.002	-0.071	-0.777	-0.042	-0.425
24.0		-0.030	-0.000	-0.023	-0.517	-0.400
33.0		-0.001	-0.004	-0.074	-0.700	-0.104
54.0		-0.045	-0.002	-0.037	-0.750	-0.121
73.5		0.043	-0.700	-0.007	-0.003	0.513
84.0		-0.430	0.225	-1.007	0.370	0.020
96.0		-0.527	-0.403	-0.304	0.102	0.310

WING PRESSURE COEFFICIENTS

RUN 317 POINT 4 ALPHA 4.00 PSI 0.00 HEIGHT 88.00

X/C. %		DP 2	DP 6	DP 12	DP 16	DP 22
0.0	UPPER	-0.007	-0.030	-0.030	-0.007	-0.100
2.5		0.000	0.400	-0.010	-0.723	-1.013
5.0		0.731	0.513	-0.472	-0.717	-0.073
10.0		0.400	0.307	-0.200	-0.002	-0.007
15.0		0.377	0.270	-0.530	-0.717	-0.733
24.0		0.204	0.047	-0.530	-0.002	-0.573
33.0		-0.021	-0.100	-0.010	-0.037	-0.544
54.0		-0.304	-0.437	-0.010	2.200	-0.500
65.0		-0.110	-3.570	-0.700	-0.005	-0.731
78.5		-0.003	-3.527	-1.500	-1.317	-1.370
79.5		-93.307	-73.007	9.004	3.010	4.420
80.5		-7.540	-5.004	-0.540	0.501	0.005
81.5		-2.000	-0.005	-0.070	0.031	1.070
82.0		1.000	-1.013	-0.505	0.700	0.500
84.0		-0.215	-4.041	-1.002	-1.103	0.533
87.0		0.000	-4.175	-1.100	-1.307	-1.005
90.0		-1.575	-1.002	-1.207	-1.203	-1.375
93.0		-0.700	-0.053	-1.275	-1.230	-0.204
96.0		-0.040	-0.017	-1.153	-1.175	-1.300
100.0		-1.110	-1.217	-1.350	-1.140	-1.000
2.5	LOWER	-0.770	-0.043	-0.004	-0.053	-0.103
5.0		-0.751	-0.000	-0.010	-0.005	-0.270
10.0		-0.030	-0.007	-0.007	-0.001	-0.302
24.0		-0.003	-0.006	-0.004	-0.003	-0.404
33.0		-0.003	-0.025	-0.030	-0.006	-0.147
54.0		-0.007	-0.000	-0.043	-0.700	-0.000
73.5		0.006	-0.031	-0.527	-0.051	0.400
84.0		-0.301	0.230	-1.301	0.275	0.630
96.0		-0.407	-0.350	-0.204	0.000	0.270

RUN 317 POINT 6 ALPHA 8.02 PSI 0.01 HEIGHT 87.63

X/C. %		DP 2	DP 6	DP 12	DP 16	DP 22
0.0	UPPER	-0.001	-0.740	-0.501	-1.014	-0.043
2.5		0.070	0.303	-1.040	-0.074	-1.217
5.0		0.702	0.374	-1.033	-0.017	-1.010
10.0		0.400	0.753	-0.027	-0.000	-0.704
15.0		0.317	0.137	-1.004	-0.007	-0.700
24.0		0.150	0.002	-0.000	-0.035	-0.500
33.0		-0.000	-0.102	-0.000	-1.104	-0.530
54.0		-0.202	-0.437	-0.704	2.277	-0.003
65.0		-0.103	-2.405	-0.001	-1.150	-0.774
78.5		-0.137	-3.012	-2.300	-1.020	-1.400
79.5		-93.001	-81.143	0.104	2.207	4.253
80.5		-7.510	-5.005	-0.450	0.404	0.005
81.5		-3.111	-0.777	0.014	0.703	1.107
82.0		1.003	-1.000	-0.017	0.224	0.002
84.0		-6.053	-4.001	-2.107	-1.120	0.500
87.0		0.401	-4.437	-1.317	-1.303	-1.454
90.0		-1.750	-1.000	-1.335	-1.227	-1.322
93.0		-0.001	-0.450	-1.107	-1.035	-0.230
96.0		-1.032	-0.005	-0.002	-0.040	-1.103
100.0		-0.750	-0.574	-0.041	-0.053	-0.041
2.5	LOWER	-0.074	-0.743	-0.040	-0.004	0.002
5.0		-0.713	-0.022	-0.000	-0.001	-0.007
10.0		-0.033	-0.000	-0.770	-0.040	-0.300
24.0		-0.707	-0.070	-0.071	-0.043	-0.343
33.0		-0.000	-0.004	-0.030	-0.000	-0.100
54.0		-0.000	-0.030	-0.773	-0.007	-0.115
73.5		0.056	-0.470	-0.303	-0.007	0.513
84.0		-0.170	0.200	-1.224	0.333	0.044
96.0		-0.302	-0.315	-0.140	0.103	0.330

WING PRESSURE COEFFICIENTS

RUN 317 POINT 7 ALPHA 10.07 PSI 0.01 HEIGHT 80.00

X/C, %		BP 2	BP 6	BP 12	BP 16	BP 22
0.0	UPPER	-0.811	-0.663	-0.972	-1.046	-1.207
2.5		0.640	0.163	-1.112	-1.026	-1.436
5.0		0.466	0.186	-1.223	-0.957	-1.112
10.0		0.411	0.086	-1.247	-0.862	-0.757
15.0		0.266	-0.066	-1.361	-0.841	-0.733
24.0		0.079	-0.137	-1.247	-0.841	-0.572
33.0		-0.164	-0.276	-1.226	-1.036	-0.561
54.0		-0.312	-0.470	-1.007	2.279	-0.610
65.0		-0.227	-2.206	-0.966	-1.126	-0.783
78.5		-0.190	-3.707	-2.436	-1.661	-1.661
79.5		-82.718	-83.430	0.241	2.050	3.610
80.5		-7.613	-5.007	-0.204	0.523	-0.026
81.5		-2.486	-0.730	0.029	0.820	1.146
82.0		1.374	-2.235	-1.154	0.240	0.707
84.0		-6.771	-5.147	-2.261	-1.361	0.636
87.0		0.462	-4.607	-1.364	-1.462	-1.521
90.0		-1.987	-1.636	-1.270	-1.223	-1.416
93.0		-1.161	0.596	-0.882	-0.873	-0.292
96.0		-1.233	-0.944	-0.625	-0.964	-1.141
100.0		-0.513	-0.576	-0.474	-0.766	-0.611
2.5	LOWER	-0.822	-0.763	-0.850	-0.848	0.102
5.0		-0.854	-0.783	-0.877	-0.860	-0.007
10.0		-0.786	-0.761	-0.766	-0.931	-0.137
24.0		-0.782	-0.675	-0.849	-0.826	-0.305
33.0		-0.673	-0.056	-0.912	-0.761	-0.261
54.0		-0.506	-0.726	-0.630	-0.573	-0.073
73.5		0.065	-0.277	-0.264	-0.017	0.514
84.0		-0.082	0.325	-1.225	0.277	0.675
96.0		-0.154	-0.043	-0.030	0.144	0.253

RUN 318 POINT 2 ALPHA 0.02 PSI 0.01 HEIGHT 87.96

X/C, %		BP 2	BP 6	BP 12	BP 16	BP 22
0.0	UPPER	-0.812	-0.857	-0.857	0.216	0.478
2.5		0.798	0.706	-0.245	-0.264	-0.484
5.0		0.773	0.607	-0.126	-0.334	-0.556
10.0		0.578	0.536	-0.112	-0.350	-0.481
15.0		0.420	0.360	-0.230	-0.363	-0.482
24.0		0.230	0.130	-0.206	-0.347	-0.410
33.0		0.046	-0.043	-0.372	-0.427	-0.426
54.0		-0.126	-0.348	-0.495	1.600	-0.413
65.0		-0.040	-1.804	-0.642	-0.824	-0.563
78.5		-0.030	-2.806	-1.199	-1.004	-1.226
79.5		-44.885	-45.218	0.002	2.063	1.732
80.5		-4.714	-4.313	-0.103	0.771	0.066
81.5		-2.522	0.123	0.553	0.966	1.080
82.0		0.061	-1.594	-0.360	0.054	0.855
84.0		-3.006	-2.838	-1.027	-0.800	0.849
87.0		0.018	-2.364	-0.835	-1.062	-1.351
90.0		-0.060	-1.136	-1.017	-1.027	-1.321
93.0		-0.406	-0.535	-0.961	-1.032	-0.073
96.0		-0.450	-0.708	-0.880	-1.007	-1.394
100.0		-0.522	-0.774	-0.906	-0.870	-1.045
2.5	LOWER	-0.829	-0.864	-0.797	-0.821	-0.245
5.0		-0.831	-0.882	-0.784	-0.754	-0.290
10.0		-0.848	-3.877	-0.882	-0.720	-0.338
24.0		-0.795	-0.735	-0.703	-0.847	-0.356
33.0		-0.729	-0.715	-0.718	-0.583	-0.044
54.0		-0.500	-0.610	-0.555	-0.440	0.484
72.5		0.045	-0.350	-0.256	0.475	0.470
84.0		-0.121	-0.221	-1.374	0.378	0.624
96.0		-0.066	-0.125	-0.133	0.111	0.295

RUN 317 POINT 10 ALPHA 22.04 PSI 0.01 HEIGHT 87.42

X/C, %		BP 2	BP 6	BP 12	BP 16	BP 22
0.0	UPPER	-1.008	-0.820	-1.367	-1.787	-2.013
2.5		0.526	-0.330	-1.263	-1.848	-2.248
5.0		0.483	-0.300	-1.317	-1.560	-2.007
10.0		0.181	-0.550	-1.301	-1.340	-1.829
15.0		0.007	-0.620	-1.572	-1.280	-1.490
24.0		-0.186	-0.715	-1.560	-1.181	-1.207
33.0		-0.410	-0.770	-1.639	-1.296	-1.111
54.0		-0.267	-0.762	-1.401	2.364	-1.042
65.0		-0.440	-2.067	-1.437	-1.422	-1.140
78.5		-0.433	-4.012	-2.878	-1.950	-1.478
79.5		-82.451	-86.642	0.219	2.566	4.622
80.5		-7.812	-6.904	0.054	0.564	-0.218
81.5		-4.630	-0.720	0.681	0.844	1.167
82.0		0.279	-2.603	-1.335	0.305	0.741
84.0		-7.838	-5.581	-2.542	-1.713	0.673
87.0		-0.510	-5.440	-1.682	-1.878	-1.598
90.0		-2.001	-2.505	-1.549	-1.703	-1.472
93.0		-1.667	-1.060	-1.114	-1.345	-0.521
96.0		-1.016	-1.340	-0.835	-1.160	-1.340
100.0		-0.956	-0.753	-0.516	-0.960	-1.598
2.5	LOWER	-0.836	-0.668	-0.861	-0.753	-0.171
5.0		-0.832	-0.815	-0.781	-0.630	-0.050
10.0		-0.845	-0.837	-0.600	-0.495	-0.007
24.0		-0.878	-0.814	-0.384	-0.182	-0.035
33.0		-0.805	-0.498	-0.220	-0.057	-0.486
54.0		0.110	0.130	0.235	0.000	-0.021
73.5		0.004	0.388	0.403	0.015	-0.081
84.0		0.288	0.383	-1.381	0.293	-0.124
96.0		0.254	0.572	0.500	0.362	-0.171

RUN 318 POINT 4 ALPHA 4.00 PSI 0.01 HEIGHT 87.78

X/C, %		BP 2	BP 6	BP 12	BP 16	BP 22
0.0	UPPER	-0.750	-0.633	-0.812	-0.587	-0.301
2.5		0.754	0.515	-0.533	-0.442	-1.000
5.0		0.722	0.513	-0.406	-0.455	-0.870
10.0		0.518	0.377	-0.400	-0.480	-0.666
15.0		0.372	0.253	-0.558	-0.560	-0.508
24.0		0.183	0.053	-0.572	-0.529	-0.497
33.0		0.021	-0.056	-0.617	-0.616	-0.485
54.0		-0.167	-0.312	-0.063	1.636	-0.400
65.0		-0.045	-1.550	-0.723	-0.753	-0.570
78.5		-0.035	-2.702	-1.255	-0.913	-1.074
79.5		-44.219	-45.325	0.526	2.016	1.623
80.5		-4.878	-4.380	-0.262	0.800	0.054
81.5		-2.584	0.078	0.587	0.883	0.905
82.0		-0.024	-1.700	-0.364	0.585	0.779
84.0		-3.849	-3.002	-1.018	-0.787	0.787
87.0		-0.020	-2.800	-0.980	-0.959	-1.116
90.0		-1.052	-1.148	-1.043	-0.918	-1.002
93.0		-0.564	-0.488	-0.943	-0.866	-0.068
96.0		-0.567	-0.594	-0.811	-0.825	-1.066
100.0		-0.571	-0.533	-0.930	-0.921	-0.372
2.5	LOWER	-0.584	-0.824	-0.741	-0.726	-0.042
5.0		-0.581	-0.846	-0.880	-0.884	-0.161
10.0		-0.857	-0.849	-0.805	-0.671	-0.276
24.0		-0.878	-0.707	-0.811	-0.510	-0.392
33.0		-0.882	-0.677	-0.610	-0.576	-0.054
54.0		-0.550	-0.570	-0.486	-0.511	0.448
73.5		0.885	-0.270	-0.328	0.133	0.434
84.0		-0.030	-0.148	-1.000	-0.049	0.687
96.0		0.078	-0.080	-0.173	-0.102	0.310

WING PRESSURE COEFFICIENTS

RUN 318 POINT 6 ALPHA 8.01 PSI 0.01 HEIGHT 88.34

X/C, %		BP 2	BP 6	BP 12	BP 16	BP 22
0.0	(UPPER)	-0.752	-0.587	-0.820	-1.066	-0.476
2.5		0.716	0.347	-0.824	-0.872	-0.811
5.0		0.878	0.351	-1.060	-0.844	-0.810
10.0		0.474	0.245	-1.117	-0.786	-0.867
15.0		0.326	0.136	-1.175	-0.775	-0.817
24.0		0.133	-0.015	-1.031	-0.833	-0.551
33.0		-0.031	-0.130	-0.935	-0.867	-0.537
54.0		-0.246	-0.386	-0.714	1.573	-0.505
65.0		-0.082	-1.579	-0.701	-0.887	-0.632
78.5		-0.075	-3.065	-1.988	1.230	-1.196
79.5		-46.396	-46.888	0.300	0.583	1.075
80.5		-5.565	-5.485	-0.175	0.584	-0.005
81.5		-2.976	-0.035	0.570	0.762	0.661
82.0		-0.343	-2.077	-0.838	0.500	0.688
84.0		-4.190	-3.486	-1.327	-1.022	0.710
87.0		-0.253	-2.053	-1.076	-1.034	-0.003
88.0		-1.204	-1.317	-0.930	-0.008	-0.001
93.0		-0.814	-0.528	-0.612	-0.737	-0.064
96.0		-0.830	-0.833	-0.420	-0.048	-0.002
100.0		-0.370	-0.171	0.202	-0.508	-0.081
2.5	(LOWER)	-0.545	-0.001	-0.702	-0.814	-0.126
5.0		-0.540	-0.035	-0.683	-0.700	-0.180
10.0		-0.827	-0.020	-0.671	-0.720	-0.231
24.0		-0.054	-0.000	-0.653	-0.545	-0.256
33.0		-0.080	-0.085	-0.586	-0.435	-0.083
54.0		-0.445	-0.440	-0.303	-0.245	0.363
73.5		0.062	-0.061	-0.072	-0.003	0.245
84.0		0.150	0.033	-0.082	-0.008	0.414
96.0		0.282	0.188	0.068	-0.005	0.210

RUN 318 POINT 7 ALPHA 12.07 PSI 0.01 HEIGHT 87.07

X/C, %		BP 2	BP 6	BP 12	BP 16	BP 22
0.0	(UPPER)	-0.752	-0.525	-1.085	-1.387	-2.320
2.5		0.687	0.159	-1.038	-1.221	-1.582
5.0		0.600	0.124	-1.183	-1.114	-1.246
10.0		0.375	0.030	-1.295	-1.022	-0.964
15.0		0.217	-0.057	-1.422	-0.878	-0.837
24.0		0.030	-0.185	-1.372	-0.880	-0.718
33.0		-0.110	-0.290	-1.301	-1.120	-0.660
54.0		-0.262	-0.403	-1.055	1.530	-0.701
65.0		-0.188	-1.808	-1.025	-1.275	-0.788
78.5		-0.164	-3.475	-2.603	-1.750	-1.388
79.5		-47.113	-47.523	0.320	-0.108	1.545
80.5		-7.007	-7.564	0.005	0.516	-0.004
81.5		-3.506	0.085	0.342	0.700	0.803
82.0		-0.988	-2.722	-1.221	0.445	0.630
84.0		-4.060	-4.064	-1.757	-1.500	0.706
87.0		-0.720	-3.482	-1.440	-1.504	-1.266
88.0		-1.081	-1.740	-1.219	-1.342	-1.308
93.0		-1.201	-0.804	-0.780	-1.070	-0.203
96.0		-1.214	-0.842	-0.557	-0.909	-1.060
100.0		-0.180	-0.024	-0.348	-0.712	-0.022
2.5	(LOWER)	-0.554	-0.547	-0.788	-0.712	0.166
5.0		-0.551	-0.586	-0.747	-0.606	0.158
10.0		-0.600	-0.568	-0.665	-0.472	0.096
24.0		-0.611	-0.642	-0.447	-0.180	0.033
33.0		-0.810	-0.530	-0.258	-0.048	-0.182
54.0		-0.030	-0.065	0.144	0.098	0.326
73.5		0.757	0.183	0.287	-0.002	0.108
84.0		0.212	-0.015	-1.158	0.310	0.120
96.0		0.292	0.438	0.387	0.305	0.082

WING PRESSURE COEFFICIENTS

RUN 318 POINT 8 ALPHA 10.05 PSI 0.01 HEIGHT 87.56

X/C, %		BP 2	BP 6	BP 12	BP 16	BP 22
0.0	(UPPER)	-0.534	-0.298	-1.453	-2.067	-3.018
2.5		0.502	0.046	-1.183	-1.027	-2.714
5.0		0.462	-0.063	-1.100	-1.500	-2.403
10.0		0.231	-0.217	-1.275	-1.304	-1.924
15.0		0.076	-0.306	-1.386	-1.255	-1.009
24.0		-0.114	-0.401	-1.422	-1.222	-1.318
33.0		-0.207	-0.512	-1.436	-1.287	-1.183
54.0		-0.271	-0.050	-1.371	1.495	-1.047
65.0		-0.253	-1.746	-1.460	-1.506	-1.070
78.5		-0.255	-3.997	-3.483	-2.499	-1.384
79.5		-51.246	-48.428	0.280	-1.023	1.004
80.5		-8.533	-8.002	0.179	0.426	-0.216
81.5		-4.202	-0.007	0.264	0.871	0.643
82.0		-1.713	-3.204	-1.667	0.487	0.560
84.0		-5.248	-4.514	-2.233	-2.015	0.714
87.0		-1.100	-4.014	-1.870	-2.100	-1.260
88.0		-1.873	-2.226	-1.573	-1.082	-1.485
93.0		-1.447	-1.061	-1.002	-1.535	-0.279
96.0		-1.441	-1.031	-0.831	-1.295	-1.444
100.0		-0.435	-0.244	-0.300	-0.067	-1.300
2.5	(LOWER)	-0.384	-0.316	-0.874	0.000	0.331
5.0		-0.337	-0.384	-0.561	0.219	0.412
10.0		-0.357	-0.348	-0.286	0.284	0.240
24.0		-0.370	-0.363	0.110	0.312	0.192
33.0		-0.295	-0.153	0.245	0.352	-0.250
54.0		0.228	0.245	0.432	0.300	0.312
73.5		0.714	0.449	0.621	0.235	0.407
84.0		0.268	0.158	-1.480	0.706	0.487
96.0		0.282	0.538	0.549	0.488	0.224

RUN 318 POINT 10 ALPHA 22.00 PSI 0.01 HEIGHT 85.78

X/C, %		BP 2	BP 6	BP 12	BP 16	BP 22
0.0	(UPPER)	-1.011	-0.378	-3.550	-6.172	-3.883
2.5		0.470	-0.181	-1.873	-4.188	-3.588
5.0		0.318	-0.365	-1.381	-2.584	-3.826
10.0		0.001	-0.554	-1.250	-2.372	-3.495
15.0		-0.188	-0.685	-1.200	-1.885	-3.095
24.0		-0.382	-0.777	-1.294	-1.318	-2.395
33.0		-0.510	-0.849	-1.348	-1.238	-1.819
54.0		-0.341	-0.903	-1.420	1.513	-1.241
65.0		-0.357	-1.704	-1.532	-1.355	-1.142
78.5		-0.383	-4.201	-2.481	-1.580	-1.383
79.5		-55.321	-49.804	0.188	1.245	1.848
80.5		-9.041	-9.187	0.322	0.322	-0.302
81.5		-4.862	-0.138	0.200	0.843	0.586
82.0		-2.321	-3.314	-0.846	0.467	0.515
84.0		-5.842	-4.834	-1.468	-1.490	0.730
87.0		-1.380	-4.314	-1.385	-1.642	-1.236
88.0		-2.116	-2.518	-2.068	-1.605	-1.368
93.0		-1.582	-1.181	-1.981	-1.022	-0.376
96.0		-1.580	-1.163	-1.729	-1.572	-1.353
100.0		-0.758	-0.637	-1.465	-1.500	-1.294
2.5	(LOWER)	-1.304	-0.432	0.286	0.358	-0.033
5.0		-0.830	-0.094	0.444	0.533	0.287
10.0		-0.234	-0.356	0.501	0.515	0.356
24.0		0.117	0.202	0.416	0.384	0.258
33.0		0.224	0.277	0.381	0.395	-0.335
54.0		0.376	0.338	0.432	0.338	0.311
73.5		0.710	0.518	0.899	0.342	0.385
84.0		0.153	0.200	-1.368	0.735	0.450
96.0		0.403	0.507	0.434	0.342	0.108

WING PRESSURE COEFFICIENTS

RUN 320 POINT 2 ALPHA -0.01 PSI 0.00 HEIGHT 18.93

X/C, %		BP 2	BP 8	BP 12	BP 16	BP 22
0.0	(UPPER)	0.550	0.377	0.223	-0.007	0.010
2.5		-0.107	-0.278	-0.387	-0.457	-0.522
5.0		-0.236	-0.300	-0.418	-0.353	-0.343
10.0		-0.235	-0.227	-0.332	-0.414	-0.476
15.0		-0.252	-0.300	-0.288	-0.305	-0.256
24.0		-0.204	-0.221	-0.236	-0.454	-0.325
33.0		-0.233	-0.263	-0.280	-0.331	-0.267
54.0		-0.478	-0.270	-0.308	-0.268	-0.246
65.0		-0.638	-0.321	-0.470	-0.388	-0.222
78.5		-0.664	-0.603	-0.867	-0.666	-0.515
79.5		-0.320	-0.383	-0.875	-0.505	-0.705
80.5		-0.440	-0.631	0.410	-0.704	-0.080
81.5		-0.826	-0.583	-0.584	-0.531	-0.633
82.0		-0.720	-0.287	-0.151	-0.352	-0.511
84.0		-0.378	-0.619	0.008	-0.854	-0.324
87.0		-0.360	-0.511	-0.646	-0.587	-0.387
89.0		-0.332	-0.455	-0.538	-0.635	-0.589
93.0		-0.482	-0.486	-0.577	-0.740	0.068
96.0		-0.447	-0.382	-0.670	-0.864	-0.498
100.0		-0.352	-0.381	-0.568	-0.603	-0.638
2.5	(LOWER)	0.170	0.231	0.245	0.176	0.270
5.0		0.088	0.194	0.240	0.170	0.174
10.0		0.180	0.203	0.182	0.214	0.061
24.0		0.106	0.152	0.145	0.035	0.085
33.0		0.151	0.160	0.151	0.170	0.058
54.0		0.287	0.258	0.308	0.227	-0.268
73.5		-0.129	0.572	0.588	0.203	0.472
84.0		0.644	0.888	-0.654	0.821	0.510
96.0		0.546	0.436	0.384	0.321	0.265

RUN 320 POINT 3 ALPHA -0.01 PSI 0.00 HEIGHT 18.22

X/C, %		BP 2	BP 8	BP 12	BP 16	BP 22
0.0	(UPPER)	0.551	0.366	0.202	-0.036	-0.005
2.5		-0.222	-0.287	-0.415	-0.484	-0.554
5.0		-0.264	-0.317	-0.440	-0.378	-0.372
10.0		-0.267	-0.240	-0.354	-0.445	-0.510
15.0		-0.283	-0.324	-0.288	-0.426	-0.277
24.0		-0.332	-0.239	-0.268	-0.480	-0.355
33.0		-0.266	-0.281	-0.289	-0.360	-0.287
54.0		-0.514	-0.300	-0.341	-0.335	-0.273
65.0		-0.061	-0.348	-0.505	-0.418	-0.248
78.5		-0.088	-0.840	-1.009	-0.892	-0.566
79.5		-0.351	-0.432	-0.731	-0.830	-0.808
80.5		-0.471	-0.666	0.398	-0.789	-0.095
81.5		-0.672	-0.650	-0.657	-0.592	-0.714
82.0		-0.798	-0.303	-0.105	-0.438	-0.593
84.0		-0.400	-0.851	0.101	-0.811	-0.285
87.0		-0.410	-0.529	-0.687	-0.706	-0.417
89.0		-0.355	-0.485	-0.569	-0.661	-0.641
93.0		-0.481	-0.518	-0.607	-0.769	0.050
96.0		-0.477	-0.388	-0.719	-0.880	-0.537
100.0		-0.373	-0.420	-0.600	-0.627	-0.680
2.5	(LOWER)	0.133	0.214	0.221	0.155	0.251
5.0		0.028	0.182	0.217	0.153	-0.152
10.0		0.141	0.196	0.146	0.196	0.037
24.0		0.085	0.143	0.128	0.010	0.077
33.0		0.128	0.144	0.126	0.162	0.035
54.0		0.278	0.242	0.287	0.213	-0.334
73.5		-0.195	0.561	0.553	0.183	0.457
84.0		0.631	0.653	-0.685	0.613	0.494
96.0		0.541	0.426	0.373	0.308	0.243

WING PRESSURE COEFFICIENTS

RUN 320 POINT 4 ALPHA -0.03 PSI 0.00 HEIGHT 32.23

X/C, %		BP 2	BP 8	BP 12	BP 16	BP 22
0.0	(UPPER)	0.587	0.436	0.331	0.134	0.210
2.5		-0.186	-0.225	-0.310	-0.380	-0.412
5.0		-0.230	-0.274	-0.377	-0.285	-0.262
10.0		-0.232	-0.205	-0.311	-0.383	-0.460
15.0		-0.260	-0.288	-0.344	-0.382	-0.233
24.0		-0.313	-0.188	-0.23[illegible]	-0.483	-0.320
33.0		-0.234	-0.267	-0.270	-0.334	-0.274
54.0		-0.481	-0.278	-0.318	-0.378	-0.255
65.0		-0.080	-0.232	-0.488	-0.386	-0.234
78.5		-0.006	-0.641	-0.867	-0.878	-0.577
79.5		-0.353	-0.448	-0.00[illegible]	-0.811	-0.860
80.5		-0.476	-0.712	0.483	-0.880	-0.102
81.5		-0.661	-0.806	-0.881	-0.666	-0.765
82.0		-0.782	-0.287	-0.183	-0.482	-0.613
84.0		-0.415	-0.866	0.145	-0.818	-0.263
87.0		-0.359	-0.536	-0.683	-0.800	-0.309
89.0		-0.338	-0.481	-0.540	-0.838	-0.655
93.0		-0.488	-0.513	-0.584	-0.745	0.040
96.0		-0.457	-0.385	-0.697	-0.860	-0.560
100.0		-0.341	-0.432	-0.571	-0.594	-0.725
2.5	(LOWER)	0.081	0.151	0.153	0.086	0.180
5.0		0.005	0.141	0.188	0.081	0.161
10.0		0.107	0.140	0.098	0.146	0.002
24.0		0.044	0.082	0.086	-0.033	0.054
33.0		0.084	0.098	0.087	0.122	0.035
54.0		0.245	0.208	0.208	0.168	-0.394
73.5		-0.251	0.532	0.551	0.183	0.473
84.0		0.584	0.608	-0.723	0.613	0.508
96.0		0.515	0.402	0.370	0.313	0.250

RUN 320 POINT 5 ALPHA -0.04 PSI 0.00 HEIGHT 65.61

X/C, %		BP 2	BP 8	BP 12	BP 16	BP 22
0.0	(UPPER)	0.622	0.478	0.406	0.145	0.261
2.5		-0.156	-0.185	-0.244	-0.298	-0.385
5.0		-0.247	-0.268	-0.370	-0.238	-0.218
10.0		-0.243	-0.185	-0.313	-0.384	-0.481
15.0		-0.264	-0.318	-0.213	-0.400	-0.183
24.0		-0.350	-0.205	-0.215	-0.528	-0.358
33.0		-0.276	-0.294	-0.261	-0.356	-0.310
54.0		-0.331	-0.281	-0.351	-0.883	-0.275
65.0		-0.110	-0.352	-0.534	-0.418	-0.210
78.5		-0.180	-0.712	-1.084	-0.677	-0.585
79.5		-0.425	-0.487	-1.402	-0.560	-0.882
80.5		-0.611	-0.927	0.280	-1.454	-0.263
81.5		-0.925	-1.240	-1.312	-1.126	-1.488
82.0		-1.085	-0.298	-0.253	-0.888	-1.152
84.0		-0.505	-0.951	0.586	-1.080	-0.726
87.0		-0.388	-0.844	-0.811	-0.798	-0.334
89.0		-0.336	-0.514	-0.553	-0.637	-0.674
93.0		-0.513	-0.548	-0.608	-0.158	0.024
96.0		-0.514	-0.381	-0.749	-0.877	-0.580
100.0		-0.392	-0.454	-0.582	-0.571	-0.798
2.5	(LOWER)	0.033	0.112	0.087	-0.018	0.148
5.0		-0.050	0.134	0.138	0.025	0.038
10.0		0.108	0.126	0.038	0.116	-0.065
24.0		-0.057	0.075	0.044	-0.108	0.022
33.0		0.074	0.058	0.054	0.075	0.025
54.0		0.245	0.181	0.220	0.137	-0.842
73.5		-0.804	0.481	0.511	0.178	0.432
84.0		0.518	0.582	-0.765	0.606	0.497
96.0		0.540	0.387	0.372	0.282	0.227

WING PRESSURE COEFFICIENTS

RUN 320 POINT 6 ALPHA -0.07 PSI 0.00 HEIGHT 87.06

X/C, %		BP 2	BP 6	BP 12	BP 16	BP 22
0.0	(UPPER)	0.040	0.496	0.441	0.172	0.287
2.5		-0.139	-0.145	-0.109	-0.282	-0.332
5.0		-0.223	-0.235	-0.321	-0.212	-0.192
10.0		-0.237	-0.149	-0.262	-0.371	-0.475
15.0		-0.257	-0.303	-0.184	-0.380	-0.171
24.0		-0.352	-0.208	-0.187	-0.510	-0.341
33.0		-0.205	-0.270	-0.252	-0.342	-0.295
54.0		-0.313	-0.274	-0.344	-0.872	-0.255
85.0		-0.109	-0.338	-0.511	-0.399	-0.188
78.5		-0.150	-0.885	-1.039	-0.851	-0.558
79.5		-0.404	-0.484	-1.402	-0.527	-0.887
80.5		-0.607	-0.912	0.281	-1.416	-0.274
81.5		-0.897	-1.226	-1.257	-1.310	-1.480
82.0		-1.068	-0.285	-0.250	-0.880	-1.131
84.0		-0.461	-0.949	0.803	-1.139	-0.678
87.0		-0.361	-0.886	-0.779	-0.807	-0.254
89.0		-0.315	-0.497	-0.535	-0.812	-0.851
93.0		-0.495	-0.531	-0.585	-0.768	0.033
96.0		-0.490	-0.383	-0.728	-0.857	-0.559
100.0		-0.370	-0.443	-0.557	-0.550	-0.773
2.5	(LOWER)	0.031	0.113	0.060	-0.021	0.140
5.0		-0.060	0.139	0.118	0.023	0.038
10.0		0.110	0.130	0.040	0.123	-0.062
24.0		0.009	0.078	0.054	-0.105	0.030
33.0		0.075	0.071	0.062	0.091	0.031
54.0		0.245	0.170	0.237	0.143	-0.034
73.5		-0.002	0.488	0.505	0.188	0.432
84.0		0.519	0.509	-0.744	0.606	0.509
96.0		0.551	0.401	0.380	0.290	0.240

RUN 321 POINT 1 ALPHA 8.06 PSI -5.00 HEIGHT 47.58

X/C, %		BP 2	BP 6	BP 12	BP 16	BP 22
0.0	(UPPER)	-1.449	-2.475	-2.255	-2.766	-1.414
2.5		-1.038	-1.782	-1.415	-2.107	-1.133
5.0		-0.871	-0.956	-1.385	-2.147	-0.925
10.0		-0.888	-0.638	-1.042	-1.804	-1.205
15.0		-0.584	-0.687	-0.719	-0.705	-0.853
24.0		-0.594	-0.453	-0.542	-0.746	-0.905
33.0		-0.447	-0.476	-0.485	-0.501	-0.847
54.0		-0.333	-0.381	-0.484	-0.836	-0.841
85.0		-0.092	-0.406	-0.579	-0.491	-0.436
78.5		-0.136	-0.684	-0.883	-0.670	-0.892
79.5		-0.430	-0.429	-1.455	-0.483	-1.334
80.5		-0.855	-0.874	0.283	-1.491	-0.285
81.5		-0.975	-1.310	-1.382	-1.180	-1.555
82.0		-1.145	-0.231	-0.120	-0.907	-1.198
84.0		-0.532	-0.924	0.774	-1.129	-0.754
87.0		-0.413	-0.800	-0.739	-0.800	-0.488
89.0		-0.388	-0.461	-0.483	-0.834	-0.850
93.0		-0.811	-0.505	-0.543	-0.815	0.044
96.0		-0.843	-0.321	-0.678	-0.805	-0.758
100.0		-0.470	-0.380	-0.482	-0.587	-0.851
2.5	(LOWER)	0.528	0.558	0.443	0.306	0.455
5.0		0.387	0.481	0.522	0.386	0.358
10.0		0.470	0.544	0.388	0.448	0.190
24.0		0.230	0.319	0.277	0.100	0.145
33.0		0.278	0.251	0.231	0.237	0.055
54.0		0.338	0.282	0.306	0.173	-1.000
73.5		-0.853	0.583	0.526	0.150	0.358
84.0		0.687	0.727	-0.958	0.574	0.447
96.0		0.833	0.459	0.409	0.256	0.145

WING PRESSURE COEFFICIENTS

RUN 321 POINT 2 ALPHA 8.04 PSI -5.00 HEIGHT 85.00

X/C, %		BP 2	BP 6	BP 12	BP 16	BP 22
0.0	(UPPER)	-1.371	-2.420	-2.348	-2.502	-1.401
2.5		-1.028	-1.539	-1.784	-1.850	-1.108
5.0		-0.879	-0.972	-1.573	-1.854	-0.886
10.0		-0.891	-0.854	-1.010	-1.918	-1.187
15.0		-0.805	-0.885	-0.956	-1.223	-0.841
24.0		-0.819	-0.458	-0.518	-0.737	-0.948
33.0		-0.455	-0.491	-0.466	-0.486	-0.825
54.0		-0.353	-0.395	-0.471	-0.968	-0.831
85.0		-0.105	-0.422	-0.586	-0.489	-0.438
78.5		-0.152	-0.890	-0.883	-0.868	-0.901
79.5		-0.471	-0.480	-1.407	-0.507	-1.373
80.5		-0.877	-0.927	0.281	-1.549	-0.300
81.5		-0.989	-1.353	-1.400	-1.203	-1.582
82.0		-1.175	-0.284	-0.124	-0.939	-1.239
84.0		-0.525	-0.953	0.789	-1.120	-0.783
87.0		-0.447	-0.831	-0.728	-0.815	-0.478
89.0		-0.387	-0.490	-0.504	-0.829	-0.856
93.0		-0.837	-0.531	-0.568	-0.819	0.034
96.0		-0.608	-0.344	-0.703	-0.705	-0.773
100.0		-0.490	-0.377	-0.588	-0.588	-0.878
2.5	(LOWER)	0.487	0.536	0.438	0.302	0.451
5.0		0.341	0.484	0.514	0.372	0.343
10.0		0.454	0.528	0.357	0.429	0.172
24.0		0.203	0.300	0.256	0.078	0.130
33.0		0.257	0.237	0.218	0.218	0.048
54.0		0.326	0.238	0.288	0.154	-1.031
73.5		-0.884	0.549	0.515	0.156	0.350
84.0		0.859	0.717	-0.982	0.567	0.447
96.0		0.825	0.443	0.400	0.245	0.144

RUN 321 POINT 3 ALPHA 8.04 PSI -5.00 HEIGHT 87.05

X/C, %		BP 2	BP 6	BP 12	BP 16	BP 22
0.0	(UPPER)	-1.341	-2.394	-2.433	-2.585	-1.428
2.5		-1.024	-1.447	-1.794	-1.828	-1.127
5.0		-0.883	-0.982	-1.502	-1.928	-0.917
10.0		-0.898	-0.881	-0.953	-1.922	-1.210
15.0		-0.820	-0.703	-0.853	-1.101	-0.850
24.0		-0.813	-0.477	-0.527	-0.734	-0.961
33.0		-0.484	-0.495	-0.482	-0.498	-0.831
54.0		-0.374	-0.399	-0.488	-0.987	-0.813
85.0		-0.110	-0.432	-0.606	-0.498	-0.421
78.5		-0.167	-0.709	-0.889	-0.889	-0.894
79.5		-0.494	-0.480	-1.539	-0.488	-1.340
80.5		-0.714	-0.929	0.298	-1.557	-0.298
81.5		-1.055	-1.356	-1.438	-1.224	-1.639
82.0		-1.218	-0.271	-0.136	-0.972	-1.286
84.0		-0.566	-0.968	0.794	-1.126	-0.829
87.0		-0.485	-0.649	-0.742	-0.829	-0.487
89.0		-0.401	-0.501	-0.508	-0.828	-0.861
93.0		-0.851	-0.541	-0.571	-0.823	0.026
96.0		-0.880	-0.350	-0.700	-0.708	-0.776
100.0		-0.502	-0.389	-0.512	-0.595	-0.889
2.5	(LOWER)	0.501	0.538	0.426	0.284	0.446
5.0		0.353	0.461	0.509	0.364	0.335
10.0		0.451	0.529	0.344	0.425	0.183
24.0		0.197	0.290	0.248	0.005	0.121
33.0		0.244	0.231	0.205	0.217	0.032
54.0		0.317	0.229	0.288	0.150	-1.075
73.5		-0.920	0.544	0.507	0.151	0.340
84.0		0.850	0.727	-0.972	0.571	0.444
96.0		0.824	0.440	0.398	0.244	0.135

WING PRESSURE COEFFICIENTS

RUN 322 POINT 2 ALPHA -0.11 PSI 0.00 HEIGHT 10.11

X/C, %		BP 2	BP 6	BP 12	BP 16	BP 22
0.0	(UPPER)	0.447	0.066	-0.431	-0.020	-1.075
2.5		-0.341	-0.483	-0.720	-1.022	-1.196
5.0		-0.360	-0.454	-0.630	-0.505	-0.640
10.0		-0.253	-0.334	-0.506	-0.850	-0.748
15.0		-0.363	-0.451	-0.385	-0.006	-0.421
24.0		-0.456	-0.320	-0.376	-0.675	-0.517
33.0		-0.306	-0.433	-0.306	-0.520	-0.463
54.0		-0.061	-0.541	-0.505	-0.053	-0.456
65.0		-0.007	-1.775	-0.837	-0.067	-0.506
78.5		-0.042	-2.105	-1.956	-1.106	-1.055
79.5		-60.053	-62.406	-1.406	13.046	10.258
80.5		-5.736	-5.340	0.111	-1.403	-0.226
81.5		-3.104	-1.371	-1.424	-1.311	-1.617
82.0		-0.817	-1.578	-0.400	-1.018	-1.263
84.0		-3.023	-3.405	0.013	-1.540	-0.943
87.0		-0.027	-2.041	-1.333	-1.207	-1.254
90.0		-0.871	-1.270	-1.122	-1.104	-1.518
93.0		-0.004	-0.001	-1.187	-1.311	0.002
96.0		-0.700	-0.049	-1.200	-1.143	-1.309
100.0		-0.421	-0.053	-1.000	-1.067	-1.252
2.5	(LOWER)	0.275	0.301	0.300	0.207	0.435
5.0		0.104	0.357	0.300	0.200	0.251
10.0		0.320	0.378	0.283	0.342	0.140
24.0		0.210	0.304	0.200	0.101	0.136
33.0		0.314	0.290	0.255	0.241	0.122
54.0		0.456	0.354	0.372	0.220	-0.075
73.5		-0.784	0.573	0.510	0.106	0.330
84.0		0.700	0.700	-1.012	0.559	0.422
96.0		0.834	0.616	0.300	0.229	0.099

RUN 322 POINT 3 ALPHA -0.12 PSI 0.00 HEIGHT 32.81

X/C, %		BP 2	BP 6	BP 12	BP 16	BP 22
0.0	(UPPER)	0.475	0.150	-0.190	-0.830	-0.717
2.5		-0.340	-0.422	-0.644	-0.815	-0.000
5.0		-0.372	-0.441	-0.642	-0.824	-0.616
10.0		-0.305	-0.324	-0.408	-0.631	-0.730
15.0		-0.303	-0.440	-0.388	-0.001	-0.418
24.0		-0.477	-0.354	-0.385	-0.000	-0.534
33.0		-0.416	-0.441	-0.413	-0.522	-0.406
54.0		-0.052	-0.578	-0.621	-0.922	-0.504
65.0		-0.000	-1.041	-0.883	-0.706	-0.560
78.5		-0.110	-3.247	-1.630	-1.234	-2.130
79.5		-60.700	-43.240	-1.532	14.295	10.055
80.5		-5.073	-5.402	0.137	-1.553	-0.331
81.5		-3.406	-1.440	-1.477	-1.304	-1.002
82.0		-1.003	-1.730	-0.551	-1.045	-1.325
84.0		-4.006	-3.005	0.006	-1.514	-0.909
87.0		-0.273	-2.740	-1.338	-1.257	-1.542
90.0		-1.002	-1.403	-1.120	-1.100	-1.000
93.0		-0.050	-0.050	-1.101	-1.435	0.022
96.0		-0.000	-0.819	-1.210	-1.250	-1.532
100.0		-0.002	-0.032	-1.000	-1.107	-1.124
2.5	(LOWER)	0.207	0.327	0.322	0.735	0.383
5.0		0.001	0.203	0.342	0.231	0.237
10.0		0.251	0.312	0.210	0.276	0.001
24.0		0.124	0.217	0.184	0.026	0.090
33.0		0.220	0.202	0.177	0.170	0.048
54.0		0.306	0.267	0.310	0.170	-0.943
73.5		-0.054	0.520	0.502	0.006	0.305
84.0		0.001	0.636	-1.700	0.000	0.450
96.0		0.730	0.500	0.337	0.227	0.100

WING PRESSURE COEFFICIENTS

RUN 322 POINT 4 ALPHA 0.06 PSI 0.00 HEIGHT 00.07

X/C, %		BP 2	BP 6	BP 12	BP 16	BP 22
0.0	(UPPER)	0.512	0.221	-0.006	-0.476	-0.527
2.5		-0.329	-0.415	-0.663	-0.700	-0.924
5.0		-0.374	-0.438	-0.837	-0.506	-0.000
10.0		-0.300	-0.215	-0.510	-0.751	-0.795
15.0		-0.390	-0.456	-0.304	-0.610	-0.422
24.0		-0.484	-0.346	-0.300	-0.715	-0.954
33.0		-0.437	-0.404	-0.422	-0.901	-0.511
54.0		-0.035	-0.007	-0.003	-1.032	-0.543
65.0		-0.143	-1.000	-0.023	-0.752	-0.022
78.5		-0.183	-2.330	-1.004	-1.300	-2.431
79.5		-50.510	-43.005	-1.000	14.734	10.025
80.5		-6.150	-5.007	0.145	-1.050	-0.277
81.5		-3.544	-1.514	-.582	-1.426	-1.705
82.0		-1.230	-1.011	-0.553	-1.125	-1.435
84.0		-4.212	-3.005	0.013	-1.706	-1.050
87.0		-0.353	-2.022	-1.300	-1.444	-1.734
90.0		-1.154	-1.440	-1.100	-1.200	-1.933
93.0		-0.030	-0.001	-1.227	-1.572	-0.030
96.0		-0.000	-0.073	-1.250	-1.302	-1.300
100.0		-0.744	-0.005	-1.074	-1.203	-1.033
2.5	(LOWER)	0.107	0.279	0.200	0.102	0.342
5.0		0.040	0.243	0.200	0.170	0.101
10.0		0.200	0.200	0.104	0.234	0.041
24.0		0.077	0.175	0.134	-0.020	0.000
33.0		0.174	0.155	0.125	0.130	-0.001
54.0		0.310	0.229	0.273	0.136	-1.004
73.5		-0.071	0.491	0.500	0.003	0.304
84.0		0.502	0.605	-1.744	0.011	0.454
96.0		0.002	0.521	0.320	0.211	0.101

RUN 322 POINT 5 ALPHA 0.04 PSI 0.00 HEIGHT 07.00

X/C, %		BP 2	BP 6	BP 12	BP 16	BP 22
0.0	(UPPER)	0.511	0.240	-0.004	-0.432	-0.470
2.5		-0.324	-0.406	-0.000	-0.705	-0.013
5.0		-0.303	-0.440	-0.017	-0.570	-0.010
10.0		-0.374	-0.316	-0.504	-0.004	-0.770
15.0		-0.400	-0.474	-0.304	-0.020	-0.433
24.0		-0.506	-0.355	-0.304	-0.730	-0.507
33.0		-0.450	-0.405	-0.443	-0.571	-0.520
54.0		-0.031	-0.615	-0.007	-1.000	-0.540
65.0		-0.150	-1.030	-0.040	-0.700	-0.010
78.5		-0.190	-3.306	-1.730	-1.312	-2.332
79.5		-50.060	-44.200	-1.700	15.317	10.072
80.5		-6.202	-5.705	0.121	-1.747	-0.300
81.5		-3.032	-1.002	-1.035	-1.407	-1.047
82.0		-1.202	-1.050	-0.570	-1.107	-1.470
84.0		-4.242	-3.747	0.030	-1.000	-1.113
87.0		-0.355	-2.052	-1.300	-1.473	-1.717
90.0		-1.170	-1.401	-1.170	-1.200	-1.070
93.0		-0.050	-0.027	-1.245	-1.504	-0.000
96.0		-0.000	-0.000	-1.200	-1.257	-1.401
100.0		-0.700	-0.015	-1.000	-1.212	-1.032
2.5	(LOWER)	0.127	0.254	0.340	0.195	0.320
5.0		0.020	0.227	0.371	0.150	0.170
10.0		0.100	0.240	0.141	0.215	0.010
24.0		0.057	0.151	0.115	-0.044	0.044
33.0		0.151	0.137	0.100	0.115	-0.017
54.0		0.300	0.217	0.250	0.120	-1.121
73.5		-1.040	0.400	0.400	0.005	0.350
84.0		0.574	0.001	-1.030	0.003	0.422
96.0		0.677	0.516	0.310	0.195	0.104

WING PRESSURE COEFFICIENTS

RUN 323 POINT 1 ALPHA 8.04 PSI -5.01 HEIGHT 47.96

X/C, %		BP 2	BP 6	BP 12	BP 16	BP 22
0.0	(UPPER)	-2.317	-2.720	-2.030	-2.707	-1.000
2.5		-1.006	-2.070	-2.204	-2.205	-1.007
5.0		-1.131	-1.155	-2.171	-2.406	-1.425
10.0		-0.903	-0.804	-1.004	-2.023	-1.700
15.0		-0.814	-0.901	-1.205	-2.303	-1.388
24.0		-0.791	-0.800	-0.805	-1.330	-1.567
33.0		-0.878	-0.718	-0.734	-0.760	-1.546
54.0		-0.878	-0.770	-0.830	-1.227	-1.452
65.0		-0.131	-1.022	-1.071	-0.874	-1.177
78.5		-0.171	-2.500	-1.800	-1.021	-2.440
79.5		-48.041	-45.187	-1.836	14.821	16.814
80.5		-8.008	-5.180	0.144	-1.864	-0.320
81.5		-3.506	-1.888	-1.737	-1.808	-2.006
82.0		-1.182	-1.804	-0.505	-1.274	-1.805
84.0		-4.051	-4.002	0.021	-1.929	-1.197
87.0		-0.136	-3.035	-1.517	-1.878	-1.567
89.0		-1.044	-1.404	-1.308	-1.408	-1.881
93.0		-0.889	-0.873	-1.400	-1.727	-0.000
96.0		-0.824	-0.774	-1.400	-1.487	-1.358
100.0		-0.426	-0.702	-1.107	-1.158	-1.177
2.5	(LOWER)	0.578	0.563	0.423	0.259	0.378
5.0		0.450	0.580	0.558	0.398	0.356
10.0		0.554	0.607	0.437	0.486	0.210
24.0		0.308	0.308	0.345	0.152	0.158
33.0		0.372	0.334	0.285	0.273	0.018
54.0		0.416	0.321	0.346	0.175	-1.250
73.5		-1.187	0.501	0.510	0.045	0.243
84.0		0.805	0.833	-1.501	0.530	0.344
96.0		0.824	0.570	0.324	0.187	0.020

RUN 323 POINT 2 ALPHA 8.03 PSI -5.01 HEIGHT 05.06

X/C, %		BP 2	BP 6	BP 12	BP 16	BP 22
0.0	(UPPER)	-2.188	-3.067	-2.087	-2.910	-1.733
2.5		-1.371	-2.310	-2.026	-2.552	-1.820
5.0		-1.113	-1.217	-1.037	-2.502	-1.429
10.0		-0.803	-0.870	-1.524	-2.778	-1.719
15.0		-0.800	-0.800	-1.101	-2.146	-1.387
24.0		-0.788	-0.878	-0.816	-0.870	-1.571
33.0		-0.873	-0.720	-0.751	-0.875	-1.541
54.0		-0.807	-0.781	-0.849	-1.205	-1.391
65.0		-0.150	-1.819	-1.067	-0.806	-1.604
78.5		-0.202	-3.500	-1.825	-1.537	-2.449
79.5		-48.942	-45.828	-1.910	15.664	18.000
80.5		-8.058	-5.173	0.151	-1.942	-0.398
81.5		-3.575	-1.751	-1.804	-1.642	-2.000
82.0		-1.274	-2.007	-0.830	-1.337	-1.679
84.0		-4.121	-4.000	0.028	-1.882	-1.238
87.0		-0.181	-3.111	-1.530	-1.617	-1.473
89.0		-1.079	-1.464	-1.203	-1.422	-1.708
93.0		-0.833	-0.901	-1.394	-1.600	-0.052
96.0		-0.856	-0.806	-1.403	-1.470	-1.400
100.0		-0.486	-0.833	-1.001	-1.194	-1.186
2.5	(LOWER)	0.582	0.564	0.424	0.256	0.302
5.0		0.422	0.543	0.537	0.394	0.353
10.0		0.538	0.580	0.412	0.473	0.208
24.0		0.278	0.380	0.320	0.136	0.145
33.0		0.342	0.360	0.268	0.257	-0.003
54.0		0.398	0.298	0.321	0.150	-1.310
73.5		-1.248	0.581	0.492	0.050	0.247
84.0		0.872	0.818	-1.837	0.517	0.354
96.0		0.815	0.552	0.314	0.178	0.039

WING PRESSURE COEFFICIENTS

RUN 323 POINT 3 ALPHA 8.02 PSI -5.01 HEIGHT 07.03

X/C, %		BP 2	BP 6	BP 12	BP 16	BP 22
0.0	(UPPER)	-2.121	-3.067	-2.073	-3.073	-1.770
2.5		-1.379	-2.004	-2.041	-2.083	-1.082
5.0		-1.126	-1.284	-1.018	-2.707	-1.450
10.0		-0.908	-0.806	-1.408	-2.087	-1.747
15.0		-0.816	-0.829	-1.057	-2.023	-1.401
24.0		-0.808	-0.805	-0.822	-0.824	-1.800
33.0		-0.806	-0.751	-0.770	-0.700	-1.500
54.0		-0.714	-0.750	-0.870	-1.354	-1.370
65.0		-0.170	-1.854	-1.122	-0.923	-1.067
78.5		-0.222	-3.051	-1.862	-1.500	-2.505
79.5		-48.206	-46.430	-2.002	15.315	18.044
80.5		-8.009	-5.186	0.135	-2.020	-0.432
81.5		-3.832	-1.827	-1.001	-1.087	-2.150
82.0		-1.312	-2.038	-0.805	-1.383	-1.720
84.0		-4.176	-4.130	0.043	-1.945	-1.287
87.0		-0.183	-3.153	-1.505	-1.057	-1.483
89.0		-1.104	-1.503	-1.317	-1.408	-1.740
93.0		-0.904	-0.833	-1.412	-1.714	-0.046
96.0		-0.886	-0.829	-1.431	-1.500	-1.452
100.0		-0.529	-0.853	-1.126	-1.227	-1.220
2.5	(LOWER)	0.546	0.553	0.410	0.251	0.304
5.0		0.403	0.534	0.538	0.300	0.347
10.0		0.519	0.585	0.404	0.488	0.196
24.0		0.264	0.361	0.300	0.115	0.122
33.0		0.336	0.298	0.251	0.243	-0.017
54.0		0.302	0.283	0.307	0.120	-1.383
73.5		-1.306	0.571	0.488	0.051	0.242
84.0		0.877	0.800	-1.870	0.515	0.354
96.0		0.822	0.529	0.305	0.168	0.032

RUN 324 POINT 2 ALPHA 8.03 PSI -5.01 HEIGHT 47.03

X/C, %		BP 2	BP 6	BP 12	BP 16	BP 22
0.0	(UPPER)	-2.241	-3.612	-2.630	-2.877	-1.980
2.5		-1.385	-3.198	-2.143	-2.037	-1.755
5.0		-1.200	-1.712	-2.557	-1.083	-1.286
10.0		-1.000	-0.810	-2.150	-2.470	-2.000
15.0		-0.926	-1.051	-1.538	-2.400	-1.280
24.0		-1.133	-0.862	-0.756	-2.429	-1.800
33.0		-0.870	-0.880	-0.744	-1.300	-1.745
54.0		-0.884	-0.817	-1.025	-4.020	-1.630
65.0		-0.380	-2.881	-1.484	-1.120	-1.214
78.5		-0.478	-4.035	-3.204	-2.308	-2.775
79.5		-93.264	-75.397	-5.190	14.868	27.068
80.5		-8.429	-7.787	-0.587	-5.870	-1.100
81.5		-5.387	-5.368	-5.500	-5.021	-8.423
82.0		-0.800	-1.686	-0.981	-4.238	-5.220
84.0		-8.706	-7.000	1.638	-3.068	-3.923
87.0		0.500	-5.192	-2.800	-2.800	-1.053
89.0		-1.392	-2.100	-2.102	-1.763	-1.873
93.0		-1.300	-1.017	-2.181	-2.001	0.000
96.0		-1.477	-0.721	-1.900	-1.484	-1.127
100.0		-0.850	-1.538	-0.538	-0.491	-1.252
2.5	(LOWER)	0.473	0.821	0.332	-0.057	0.370
5.0		0.250	0.762	0.641	0.242	0.220
10.0		0.745	0.775	0.373	0.547	0.004
24.0		0.218	0.502	0.300	-0.154	0.101
33.0		0.440	0.310	0.213	0.105	0.048
54.0		0.496	0.125	0.209	-0.115	-4.988
73.5		-1.418	0.386	0.372	-0.337	0.027
84.0		0.735	0.782	-1.000	0.572	0.250
96.0		1.038	-0.002	0.400	0.121	-0.122

WING PRESSURE COEFFICIENTS

RUN 224 POINT 3 ALPHA 8.00 PSI -5.01 HEIGHT 00.02

X/C, %		BP 2	BP 6	BP 12	BP 16	BP 22
0.0	(UPPER)	-2.100	-3.007	-2.730	-3.007	-1.007
2.5		-1.367	-2.901	-2.010	-2.130	-1.700
5.0		-1.290	-1.377	-2.304	-2.000	-1.200
10.0		-1.002	-0.613	-1.940	-2.995	-2.002
15.0		-0.917	-1.041	-1.275	-2.504	-1.200
24.0		-1.143	-0.004	-0.777	-2.003	-1.010
33.0		-0.879	-0.002	-0.075	-1.070	-1.703
54.0		-0.020	-0.017	-1.040	-4.027	-1.572
00.0		-0.300	-2.041	-1.475	-1.100	-1.137
70.5		-0.511	-4.000	-2.020	-2.700	-2.000
79.5		-93.305	-79.103	-5.742	15.007	27.110
00.5		-0.337	-7.713	-0.500	-5.050	-1.130
01.5		-5.377	-6.225	-5.571	-5.000	-6.003
02.0		-0.040	-1.031	-0.004	-4.243	-5.174
04.0		-0.000	-7.121	1.013	-3.714	-3.042
07.0		0.432	-5.240	-2.729	-2.720	-1.025
00.0		-1.430	-2.130	-1.004	-1.044	-1.073
03.0		-1.429	-1.101	-2.104	-2.270	-0.030
00.0		-1.512	-0.033	-2.007	-1.070	-1.004
100.0		-0.010	-1.036	-0.021	-0.550	-1.300
2.5	(LOWER)	0.432	0.500	0.316	-0.003	0.203
5.0		0.220	0.740	0.025	0.235	0.234
10.0		0.715	0.700	0.340	0.532	-0.007
24.0		0.100	0.470	0.200	-0.103	0.075
33.0		0.417	0.270	0.100	0.143	-0.004
54.0		0.464	0.150	0.229	-0.127	-4.075
73.5		-1.410	0.375	0.355	-0.323	0.050
04.0		0.777	0.535	-1.700	0.502	0.200
00.0		1.077	-0.040	0.430	0.100	-0.100

RUN 224 POINT 4 ALPHA 8.02 PSI -5.01 HEIGHT 07.10

X/C, %		BP 2	BP 6	BP 12	BP 16	BP 22
0.0	(UPPER)	-2.000	-3.522	-2.015	-3.307	-2.000
2.5		-1.300	-2.000	-1.004	-2.200	-1.020
5.0		-1.320	-1.320	-2.240	-2.202	-1.330
10.0		-1.025	-0.045	-1.020	-2.770	-2.152
15.0		-0.001	-1.042	-1.174	-2.570	-1.310
24.0		-1.102	-0.000	-0.702	-1.001	-1.050
33.0		-0.900	-0.071	-0.740	-0.001	-1.005
54.0		-0.032	-0.040	-1.005	-4.017	-1.013
00.0		-0.420	-2.000	-1.400	-1.107	-1.120
70.5		-0.052	-4.055	-2.000	-2.023	-3.023
79.5		-94.000	-70.474	-5.033	16.530	27.545
00.5		-0.300	-7.729	-0.035	-5.005	-1.100
01.5		-5.450	-6.400	-5.741	-5.004	-6.403
02.0		-0.020	-1.020	-0.002	-4.200	-5.237
04.0		-7.002	-7.250	2.023	-3.700	-3.024
07.0		0.404	-5.312	-2.570	-2.731	-1.050
00.0		-1.404	-2.210	-1.004	-2.020	-1.000
03.0		-1.400	-1.104	-2.007	-2.400	-0.002
00.0		-1.550	-0.020	-2.072	-1.054	-1.055
100.0		-0.702	-1.740	-1.002	-0.733	-1.301
2.5	(LOWER)	0.411	0.007	0.270	-0.075	0.300
5.0		0.171	0.730	0.504	0.210	0.210
10.0		0.701	0.700	0.320	0.514	-0.020
24.0		0.150	0.450	0.220	-0.210	0.000
33.0		0.370	0.250	0.171	0.124	-0.022
54.0		0.405	0.122	0.201	-0.152	-5.071
73.5		-1.430	0.343	0.344	-0.320	0.040
04.0		0.025	0.000	-1.773	0.570	0.205
00.0		1.000	-0.010	0.302	0.075	-0.100

WING PRESSURE COEFFICIENTS

RUN 225 POINT 1 ALPHA 0.00 PSI 0.00 HEIGHT 10.50

X/C, %		BP 2	BP 6	BP 12	BP 16	BP 22
0.0	(UPPER)	0.003	-0.030	-0.031	-1.000	-1.004
2.5		-0.371	-0.310	-0.010	-1.127	-1.410
5.0		-0.545	-0.400	-0.722	-0.470	-0.003
10.0		-0.007	-0.104	-0.504	-0.000	-1.120
15.0		-0.473	-0.014	-0.100	-0.000	-0.220
24.0		-0.707	-0.200	-0.250	-1.104	-0.720
33.0		-0.570	-0.500	-0.301	-0.717	-0.004
54.0		-0.730	-0.027	-0.700	-4.020	-0.700
00.0		-0.303	-2.002	-1.147	-0.704	-0.220
70.5		-0.433	-4.020	-2.003	-1.230	-1.753
79.5		-92.510	-00.001	-5.015	19.200	30.001
00.5		-0.030	-0.245	-0.543	-5.070	-1.104
01.5		-4.010	-5.400	-5.004	-5.130	-6.511
02.0		-0.400	-0.027	-0.500	-4.225	-5.277
04.0		-6.000	-0.451	2.014	-2.702	-3.000
07.0		0.730	-4.040	-2.040	-1.002	-0.400
00.0		-1.107	-1.040	-1.325	-1.170	-1.004
03.0		-1.003	-0.000	-1.050	-1.743	0.000
00.0		-1.114	-0.000	-1.570	-1.200	-0.072
100.0		-0.722	-1.527	-1.174	-1.075	-1.230
2.5	(LOWER)	0.100	0.502	0.200	-0.010	0.400
5.0		0.004	0.012	0.541	0.100	0.214
10.0		0.550	0.610	0.250	0.404	-0.001
24.0		0.140	0.430	0.230	-0.230	0.004
33.0		0.410	0.204	0.105	0.140	0.123
54.0		0.570	0.210	0.205	-0.000	-5.000
73.5		-1.404	0.300	0.229	-0.353	0.150
04.0		0.001	0.003	-1.003	0.507	0.300
00.0		1.174	0.001	0.430	0.000	0.007

RUN 225 POINT 2 ALPHA -0.02 PSI 0.00 HEIGHT 22.01

X/C, %		BP 2	BP 6	BP 12	BP 16	BP 22
0.0	(UPPER)	0.530	0.121	-0.300	-1.270	-1.142
2.5		-0.250	-0.270	-0.471	-0.700	-1.200
5.0		-0.543	-0.400	-0.772	-0.434	-0.420
10.0		-0.440	-0.000	-0.004	-0.775	-1.127
15.0		-0.472	-0.010	-0.143	-0.707	-0.230
24.0		-0.029	-0.219	-0.242	-1.104	-0.747
33.0		-0.300	-0.573	-0.401	-0.745	-0.070
54.0		-0.000	-0.000	-0.010	-4.007	-0.557
00.0		-0.323	-2.004	-1.101	-0.050	-0.347
70.5		-0.440	-4.103	-2.020	-1.335	-2.415
79.5		-93.042	-07.404	-5.753	19.171	20.034
00.5		-0.004	-6.410	-0.004	-5.044	-1.002
01.5		-5.102	-6.337	-5.037	-5.004	-6.050
02.0		-0.742	-0.934	-0.401	-4.224	-5.242
04.0		-6.942	-6.505	2.074	-3.003	-3.004
07.0		0.305	-4.003	-1.900	-2.150	-0.700
00.0		-1.253	-2.035	-1.234	-1.005	-1.711
03.0		-1.210	-1.100	-1.437	-2.072	0.002
00.0		-1.300	-0.905	-1.030	-1.530	-0.040
100.0		-0.003	-1.721	-1.270	-1.270	-0.031
2.5	(LOWER)	0.117	0.420	0.223	-0.000	0.442
5.0		-0.115	0.540	0.400	0.005	0.140
10.0		0.470	0.531	0.150	0.370	-0.124
24.0		0.040	0.352	0.150	-0.315	0.045
33.0		0.310	0.107	0.102	0.001	0.103
54.0		0.450	0.117	0.205	-0.131	-5.030
73.5		-1.417	0.200	0.220	-0.312	0.102
04.0		0.052	1.030	-1.001	0.000	0.420
00.0		1.032	0.134	0.303	0.000	0.100

WING PRESSURE COEFFICIENTS

RUN 326 POINT 1 ALPHA 0.00 PSI 0.00 HEIGHT 10.30

X/C, %		BP 2	BP 6	BP 12	BP 16	BP 22
0.0	(UPPER)	0.515	-0.143	-0.752	-1.045	-1.019
2.5		-0.401	-0.304	-0.754	-1.027	-1.564
5.0		-0.573	-0.500	-0.772	-0.522	-0.522
10.0		-0.450	-0.118	-0.512	-0.024	-1.173
15.0		-0.400	-0.500	-0.167	-0.020	-[illegible].281
24.0		-0.813	-0.314	-0.253	-1.193	-0.754
33.0		-0.500	-0.570	-0.306	-0.730	-0.867
54.0		-0.021	-0.027	-0.700	-4.700	-0.534
69.0		-0.313	-2.025	-1.152	-0.023	-0.318
78.5		-0.440	-4.010	-2.077	-1.200	-2.228
79.5		-91.026	-80.078	-5.040	19.000	20.425
80.5		-8.678	-7.940	-0.503	-5.005	-1.100
81.5		-4.781	-5.100	-5.524	-4.017	-5.310
82.0		-0.400	-0.000	-0.500	-4.004	-5.000
84.0		-6.400	-8.419	2.567	-2.912	-3.707
87.0		0.730	-4.504	-2.001	-2.057	-0.710
90.0		-1.050	-1.010	-1.250	-1.314	-1.635
93.0		-0.050	-0.007	-1.020	-1.000	0.040
96.0		-1.074	-0.003	-1.507	-1.424	-0.901
100.0		-0.501	-1.750	-1.136	-1.100	-1.170
2.5	(LOWER)	0.217	0.540	0.329	0.000	0.501
5.0		-0.010	0.051	0.500	0.101	0.227
10.0		0.505	0.630	0.267	0.476	-0.030
24.0		0.100	0.400	0.240	-0.227	0.102
33.0		0.440	0.270	0.100	0.125	0.102
54.0		0.505	0.105	0.256	-0.009	-0.022
73.5		-1.272	0.357	0.340	-0.200	0.105
84.0		0.002	1.004	-1.055	0.001	0.400
96.0		1.000	0.204	0.404	0.053	0.032

RUN 326 POINT 2 ALPHA -0.02 PSI 0.00 HEIGHT 32.04

X/C, %		BP 2	BP 6	BP 12	BP 16	BP 22
0.0	(UPPER)	0.007	0.075	-0.301	-1.300	-1.242
2.5		-0.375	-0.302	-0.501	-0.002	-1.276
5.0		-0.577	-0.500	-0.7[illegible]0	-0.444	-0.454
10.0		-0.479	-0.107	-0.402	-0.015	-1.107
15.0		-0.479	-0.070	-0.100	-0.020	-0.201
24.0		-0.020	-0.327	-0.276	-1.237	-0.777
33.0		-0.030	-0.505	-0.420	-0.777	-0.703
54.0		-0.040	-0.005	-0.040	-0.072	-0.500
69.0		-0.330	-3.079	-1.217	-0.000	-0.374
78.5		-0.402	-4.205	-2.002	-1.303	-2.500
79.5		-94.026	-80.402	-5.703	20.170	20.100
80.5		-8.000	-8.370	-0.532	-5.027	-1.117
81.5		-5.275	-5.310	-5.010	-5.017	-6.453
82.0		-0.000	-1.031	-0.530	-4.145	-5.177
84.0		-8.050	-8.040	2.024	-3.102	-3.020
87.0		0.453	-4.045	-2.045	-2.250	-0.062
90.0		-1.205	-2.000	-1.200	-1.520	-1.777
93.0		-1.264	-1.202	-1.400	-2.152	0.020
96.0		-1.250	-1.020	-1.005	-1.011	-1.000
100.0		-0.500	-1.755	-1.300	-1.313	-0.073
2.5	(LOWER)	0.130	0.430	0.242	-0.005	0.440
5.0		-0.005	0.520	0.463	0.003	0.151
10.0		0.402	0.540	0.174	0.273	-0.127
24.0		0.020	0.340	0.150	-0.327	0.020
33.0		0.311	0.175	0.090	0.055	0.000
54.0		0.401	0.000	0.177	-0.152	-5.020
73.5		-1.415	0.250	0.322	-0.313	0.171
84.0		1.003	1.000	-1.753	0.011	0.413
96.0		1.024	0.205	0.373	0.050	0.004

WING PRESSURE COEFFICIENTS

RUN 326 POINT 3 ALPHA -0.04 PSI 0.00 HEIGHT 05.00

X/C, %		BP 2	BP 6	BP 12	BP 16	BP 22
0.0	(UPPER)	0.070	0.200	-0.120	-1.000	-0.001
2.5		-0.352	-0.240	-0.410	-0.700	-1.120
5.0		-0.500	-0.407	-0.752	-0.000	-0.405
10.0		-0.473	-0.007	-0.007	-0.000	-1.150
15.0		-0.500	-0.040	-0.107	-0.020	-0.240
24.0		-0.070	-0.342	-0.302	-1.234	-0.700
33.0		-0.001	-0.020	-0.427	-0.707	-0.730
54.0		-0.017	-0.712	-0.001	-4.027	-0.023
69.0		-0.410	-3.112	-1.251	-0.034	-0.423
78.5		-0.537	-4.253	-2.120	-1.500	-2.730
79.5		-94.411	-80.340	-5.006	20.011	20.717
80.5		-8.070	-8.401	-0.514	-5.051	-1.220
81.5		-5.434	-5.257	-5.500	-4.044	-5.050
82.0		-0.041	-1.107	-0.504	-4.120	-5.101
84.0		-7.001	-8.730	2.502	-3.300	-3.751
87.0		0.205	-4.072	-2.120	-2.477	-0.003
90.0		-1.402	-2.100	-1.003	-1.000	-1.024
93.0		-1.340	-1.205	-1.011	-2.300	-0.031
96.0		-1.432	-1.000	-1.753	-1.700	-0.003
100.0		-0.501	-1.022	-1.405	-1.423	-0.043
2.5	(LOWER)	0.037	0.270	0.175	-0.147	0.300
5.0		-0.171	0.404	0.300	0.020	0.101
10.0		0.410	0.473	0.104	0.315	-0.100
24.0		-0.023	0.202	0.002	-0.375	0.001
33.0		0.253	0.110	0.044	0.014	0.010
54.0		0.404	0.040	0.103	-0.175	-5.001
73.5		-1.307	0.200	0.300	-0.275	0.173
84.0		1.035	1.143	-1.012	0.017	0.410
96.0		0.003	0.247	0.350	0.063	0.111

RUN 326 POINT 4 ALPHA 0.04 PSI 0.00 HEIGHT 07.30

X/C, %		BP 2	BP 6	BP 12	BP 16	BP 22
0.0	(UPPER)	0.001	0.212	-0.112	-1.000	-0.000
2.5		-0.343	-0.244	-0.000	-0.003	-1.100
5.0		-0.052	-0.450	-0.720	-0.450	-0.437
10.0		-0.474	-0.110	-0.000	-0.000	-1.150
15.0		-0.402	-0.041	-0.102	-0.017	-0.240
24.0		-0.001	-0.330	-0.200	-1.230	-0.722
33.0		-0.004	-0.023	-0.417	-0.702	-0.723
54.0		-0.507	-0.703	-0.001	-4.023	-0.001
69.0		-0.411	-3.115	-1.240	-0.023	-0.415
78.5		-0.530	-4.342	-2.120	-1.542	-2.001
79.5		-94.370	-80.424	-5.710	20.404	20.007
80.5		-8.007	-8.424	-0.400	-5.010	-1.207
81.5		-5.405	-5.200	-5.510	-4.030	-6.307
82.0		-0.050	-1.003	-0.500	-4.044	-5.130
84.0		-7.007	-8.700	2.500	-3.230	-3.745
87.0		0.315	-4.000	-2.132	-2.405	-0.001
90.0		-1.475	-2.102	-1.300	-1.004	-1.000
93.0		-1.345	-1.260	-1.500	-2.321	-0.031
96.0		-1.432	-1.060	-1.750	-1.742	-1.021
100.0		-0.515	-1.075	-1.422	-1.437	-0.070
2.5	(LOWER)	0.040	0.347	0.103	-0.100	0.307
5.0		-0.101	0.402	0.304	0.023	0.000
10.0		0.415	0.400	0.003	0.315	-0.100
24.0		-0.029	0.201	0.101	-0.301	-0.000
33.0		0.251	0.115	0.043	0.000	0.014
54.0		0.402	0.040	0.153	-0.175	-4.002
73.5		-1.300	0.200	0.310	-0.253	0.105
84.0		1.071	1.101	-1.700	0.017	0.421
96.0		0.001	0.205	0.350	0.053	0.110

WING PRESSURE COEFFICIENTS

RUN 327 POINT 2 ALPHA 0.00 PSI 0.00 HEIGHT 10.30

X/C. %		DP 2	DP 6	DP 12	DP 16	DP 22
0.0	UPPER	0.302	-0.790	-1.804	-3.981	-2.884
2.5		-0.800	-0.446	-0.714	-1.230	-2.510
5.0		-1.040	-0.726	-1.205	-0.944	-0.423
10.0		-0.700	0.000	-0.740	-1.203	-1.981
15.0		-0.800	-0.956	-0.016	-1.340	-0.156
24.0		-1.952	-0.215	-0.236	-2.190	-1.277
33.0		-1.070	-0.001	-0.507	-1.264	-1.100
54.0		-1.200	-1.016	-1.230	-11.134	-0.700
66.0		-0.800	-4.524	-1.053	-1.415	-0.110
78.5		-1.147	-6.344	-4.205	-2.000	-2.166
79.5		-170.822	-117.530	-12.016	44.906	65.500
80.5		-16.406	-14.036	-1.005	-13.230	-2.500
81.5		-8.200	-11.000	-12.677	-11.434	-14.370
82.0		0.510	-0.000	-1.100	-8.010	-11.700
84.0		-12.520	-12.005	5.700	-6.022	-0.002
87.0		1.873	-6.011	-3.050	-3.007	0.271
90.0		-2.044	-3.030	-2.322	-2.101	-1.057
93.0		-1.002	-1.212	-2.672	-3.100	-0.072
96.0		-2.244	-0.004	-2.003	-2.305	-1.004
100.0		-4.900	-4.012	-0.400	-0.525	-2.001
2.5	LOWER	0.055	0.000	0.076	-0.504	0.461
5.0		-0.344	1.011	0.540	-0.133	0.010
10.0		0.000	0.047	0.076	0.005	-0.401
24.0		0.003	0.503	0.000	-0.001	-0.007
33.0		0.400	0.100	-0.000	-0.177	-0.030
54.0		0.400	-0.245	-0.070	-0.750	-11.430
73.5		-4.130	-0.214	-0.020	-1.701	-0.190
84.0		0.041	1.100	-2.407	0.574	0.252
96.0		0.950	-0.000	0.403	-0.247	-0.300

RUN 327 POINT 3 ALPHA 0.00 PSI 0.00 HEIGHT 22.60

X/C. %		DP 2	DP 6	DP 12	DP 16	DP 22
0.0	UPPER	0.734	-0.103	-0.700	-2.500	-2.003
2.5		-0.450	-0.130	-0.406	-1.100	-1.034
5.0		-0.007	-0.570	-0.007	-0.300	-0.210
10.0		-0.675	0.210	-0.530	-1.000	-1.777
15.0		-0.001	-0.070	0.003	-1.101	-0.025
24.0		-1.495	-0.240	-0.120	-2.006	-1.130
33.0		-0.940	-0.043	-0.395	-1.003	-1.000
54.0		-0.955	-0.004	-1.107	-10.003	-0.075
66.0		-0.700	-4.401	-1.701	-1.105	-0.047
78.5		-1.003	-5.755	-2.030	-1.000	-2.303
79.5		-104.000	-104.024	-12.420	40.707	62.703
80.5		-15.077	-14.070	-1.447	-12.000	-2.200
81.5		-7.941	-11.420	-12.102	-10.072	-13.019
82.0		0.440	0.101	-0.002	-8.214	-11.240
84.0		-12.000	-11.722	6.107	-5.433	-0.500
87.0		1.000	-6.510	-3.175	-3.004	0.207
90.0		-2.020	-3.100	-1.700	-1.022	-1.702
93.0		-1.005	-1.724	-2.217	-3.211	0.029
96.0		-2.250	-1.377	-2.327	-2.130	-0.504
100.0		-3.323	-3.350	-1.500	-0.003	-1.101
2.5	LOWER	-0.040	0.000	0.113	-0.736	0.500
5.0		-0.405	0.917	0.526	-0.120	0.010
10.0		0.000	0.032	0.077	0.521	-0.057
24.0		-0.005	0.547	0.115	-0.024	-0.031
33.0		0.430	0.100	-0.040	-0.105	0.003
54.0		0.570	-0.170	0.002	-0.005	-10.002
73.5		-2.040	-0.055	0.024	-1.000	-0.133
84.0		0.935	1.120	-1.000	0.504	0.330
96.0		1.404	-0.034	0.447	-0.155	-0.103

WING PRESSURE COEFFICIENTS

RUN 327 POINT 4 ALPHA -0.02 PSI 0.00 HEIGHT 00.00

X/C. %		DP 2	DP 6	DP 12	DP 16	DP 22
0.0	UPPER	0.003	0.100	-0.270	-1.535	-1.420
2.5		-0.202	-0.030	-0.102	-0.040	-1.300
5.0		-0.000	-0.001	-0.000	-0.200	-0.107
10.0		-0.005	0.103	-0.573	-1.002	-1.740
15.0		-0.001	-0.000	0.007	-1.143	-0.015
24.0		-1.304	-0.335	-0.150	-2.003	-1.144
33.0		-0.004	-0.000	-0.433	-1.119	-1.007
54.0		-0.003	-0.000	-1.227	-10.001	-0.714
66.0		-0.044	-4.004	-1.701	-1.242	-0.125
78.5		-1.074	-5.922	-3.225	-2.006	-2.000
79.5		-100.127	-100.530	-12.300	46.070	61.014
80.5		-15.000	-14.131	-1.200	-12.000	-2.473
81.5		-8.153	-11.430	-11.002	-10.030	-13.022
82.0		0.230	0.034	-0.734	-8.146	-11.200
84.0		-12.304	-11.000	5.000	-5.024	-0.407
87.0		1.544	-6.927	-3.310	-3.000	0.235
90.0		-2.105	-3.254	-1.070	-2.200	-1.700
93.0		-2.000	-1.004	-2.524	-3.527	-0.114
96.0		-2.317	-1.200	-2.000	-2.500	-0.434
100.0		-3.407	-3.300	-1.200	-0.541	-1.000
2.5	LOWER	-0.133	0.425	0.014	-0.047	0.417
5.0		-0.400	0.770	0.500	-0.244	-0.070
10.0		0.004	0.715	-0.014	0.430	-0.545
24.0		-0.173	0.410	0.000	-0.017	-0.000
33.0		0.340	0.063	-0.126	-0.170	0.011
54.0		0.470	-0.305	-0.001	-0.007	-10.230
73.5		-2.000	-0.001	0.015	-1.010	-0.130
84.0		1.040	1.300	-1.010	0.003	0.225
96.0		1.311	-0.500	0.563	-0.003	-0.001

RUN 327 POINT 5 ALPHA -0.04 PSI 0.00 HEIGHT 07.00

X/C. %		DP 2	DP 6	DP 12	DP 16	DP 22
0.0	UPPER	0.007	0.102	-0.100	-1.000	-1.000
2.5		-0.412	-0.030	-0.103	-0.024	-1.201
5.0		-0.042	-0.531	-0.000	-0.202	-0.207
10.0		-0.032	0.100	-0.517	-1.050	-1.750
15.0		-0.070	-0.024	0.077	-1.140	-0.022
24.0		-1.300	-0.313	-0.103	-2.016	-1.107
33.0		-0.073	-0.000	-0.444	-1.120	-1.000
54.0		-0.700	-0.007	-1.230	-10.005	-0.700
66.0		-0.045	-4.407	-1.704	-1.251	-0.127
78.5		-1.005	-5.030	-3.310	-2.003	-2.000
79.5		-100.350	-100.022	-12.337	46.100	61.040
80.5		-16.040	-14.270	-1.207	-12.003	-2.531
81.5		-8.120	-11.304	-12.011	-10.700	-13.702
82.0		0.300	-0.050	-0.531	-8.131	-11.170
84.0		-12.207	-11.033	5.004	-5.051	-0.425
87.0		1.507	-6.907	-3.200	-3.022	0.202
90.0		-2.110	-3.270	-1.000	-2.271	-1.737
93.0		-2.067	-1.720	-2.400	-3.527	-0.140
96.0		-2.337	-1.312	-2.401	-2.207	-0.441
100.0		-3.404	-3.372	-1.400	-0.115	-1.000
2.5	LOWER	-0.150	0.441	-0.034	-0.004	0.417
5.0		-0.565	0.700	0.470	-0.750	-0.002
10.0		0.054	0.003	-0.017	0.415	-0.551
24.0		-0.102	0.410	0.002	-0.023	-0.104
33.0		0.230	0.044	-0.144	-0.195	0.010
54.0		0.400	-0.220	-0.040	-0.000	-10.057
73.5		-2.050	-0.002	0.012	-1.570	-0.130
84.0		1.103	1.300	-1.023	0.575	0.335
96.0		1.204	-0.490	0.402	-0.305	-0.001

WING PRESSURE COEFFICIENTS

RUN 320 POINT 1 ALPHA 8.07 PSI -5.01 HEIGHT 48.00

X/C, %		BP 2	BP 6	BP 12	BP 16	BP 22
0.0	(UPPER)	-2.306	-3.416	-2.263	-2.810	-2.021
2.5		-1.447	-2.036	-2.035	-1.880	-1.718
5.0		-1.348	-2.586	-2.080	-1.829	-1.172
10.0		-0.940	-0.883	-2.702	-2.282	-2.113
15.0		-0.305	-1.238	-1.013	-2.442	-1.083
24.0		-1.217	-1.606	-0.846	-2.767	-1.774
33.0		-0.927	-0.955	-0.594	-1.746	-1.798
54.0		-1.218	-1.038	-1.172	-0.372	-1.080
65.0		-0.441	-4.202	-1.055	-1.141	-1.374
75.5		-0.020	-5.053	-4.043	-3.063	-2.455
79.5		-166.423	-115.566	-0.112	46.102	86.483
80.5		-14.014	-11.923	-0.279	-0.513	-1.453
81.5		-0.584	-0.866	-0.590	-0.426	-0.880
82.0		2.380	-0.442	-0.035	-0.788	-0.842
84.0		-11.420	-10.614	1.505	-2.380	-0.850
87.0		2.017	-0.112	-3.379	-2.002	-0.817
88.0		-2.280	-2.932	-2.201	-1.475	-1.860
93.0		-1.804	-0.902	-1.861	-1.710	-0.968
96.0		-2.101	-1.068	-1.561	-1.200	-1.076
100.0		-2.036	-3.101	-0.402	-0.513	-1.448
2.5	(LOWER)	0.120	0.030	0.133	-0.225	0.357
5.0		-0.083	0.775	0.570	0.120	0.153
10.0		0.585	0.777	0.346	0.517	-0.082
24.0		0.120	0.283	0.287	-0.281	0.060
33.0		0.406	0.178	0.080	0.050	-0.040
54.0		0.364	0.103	0.050	-0.381	-0.744
73.5		-2.035	0.247	0.111	-2.154	-0.000
84.0		-0.218	0.261	-1.805	0.476	0.224
96.0		1.045	-0.955	0.447	0.007	-0.248

WING PRESSURE COEFFICIENTS

RUN 320 POINT 3 ALPHA 8.05 PSI -5.01 HEIGHT 87.00

X/C, %		BP 2	BP 6	BP 12	BP 16	BP 22
0.0	(UPPER)	-1.071	-2.156	-2.300	-2.020	-1.011
2.5		-1.346	-2.003	-1.966	-1.760	-1.407
5.0		-1.300	-1.526	-2.013	-1.050	-0.950
10.0		-0.900	-0.762	-2.521	-2.002	-1.807
15.0		-0.700	-1.250	-1.500	-2.100	-0.801
24.0		-1.195	-1.000	-0.500	-2.050	-1.507
33.0		-0.030	-0.970	-0.060	-1.536	-1.402
54.0		-1.113	-1.050	-1.170	-0.326	-1.121
65.0		-0.406	-4.025	-1.045	-1.121	-0.790
75.5		-0.060	-5.023	-3.063	-2.317	-1.304
79.5		-107.146	-115.272	-0.000	46.150	86.423
80.5		-14.906	-11.324	-0.237	-0.375	-1.542
81.5		-0.535	-0.400	-0.404	-0.340	-0.717
82.0		2.347	-0.448	-1.011	-0.780	-0.513
84.0		-11.541	-10.614	1.070	-2.057	-0.700
87.0		1.900	-0.112	-3.152	-2.406	0.154
88.0		-2.227	-2.901	-2.071	-1.440	-1.307
93.0		-1.926	-1.110	-1.904	-1.001	-0.100
96.0		-2.140	-1.207	-1.070	-1.400	-0.000
100.0		-2.063	-2.333	-0.770	-0.063	-1.441
2.5	(LOWER)	0.121	0.006	0.200	-0.222	0.372
5.0		-0.120	0.702	0.533	0.105	0.124
10.0		0.950	0.730	0.200	0.400	-0.145
24.0		0.045	0.324	0.200	-0.256	-0.010
33.0		0.330	0.124	0.030	0.000	-0.100
54.0		0.200	0.030	0.000	-0.044	-0.704
73.5		-2.000	0.220	0.070	-2.110	0.034
84.0		-0.121	0.319	-1.400	0.463	0.270
96.0		1.023	-0.400	0.302	-0.001	0.233

RUN 320 POINT 2 ALPHA 8.06 PSI -5.01 HEIGHT 65.61

X/C, %		BP 2	BP 6	BP 12	BP 16	BP 22
0.0	(UPPER)	-2.253	-3.400	-2.403	-3.040	-2.195
2.5		-1.400	-2.001	-2.183	-2.044	-1.031
5.0		-1.414	-1.075	-2.017	-1.040	-1.200
10.0		-1.022	-0.770	-2.710	-2.445	-2.235
15.0		-0.806	-1.200	-1.700	-2.564	-1.102
24.0		-1.312	-1.240	-0.020	-2.700	-1.079
33.0		-1.020	-1.074	-0.747	-1.000	-1.000
54.0		-1.200	-1.174	-1.341	-0.717	-1.064
65.0		-0.540	-4.274	-1.033	-1.317	-1.340
75.5		-0.737	-5.303	-4.230	-3.315	-2.633
79.5		-174.145	-121.204	-0.505	46.032	86.351
80.5		-15.220	-11.016	-0.342	-0.702	-1.612
81.5		-7.010	-0.070	-0.050	-0.727	-10.202
82.0		2.337	-0.037	-1.210	-7.130	-0.060
84.0		-12.117	-11.204	1.470	-3.020	-7.150
87.0		1.075	-0.005	-3.001	-2.005	-0.006
89.0		-2.472	-3.130	-2.551	-1.732	-1.000
93.0		-2.035	-1.143	-2.170	-2.007	-0.100
96.0		-2.200	-1.200	-1.005	-1.473	-1.200
100.0		-3.196	-3.411	-0.527	-0.056	-1.024
2.5	(LOWER)	0.056	0.010	0.122	-0.250	0.320
5.0		-0.222	0.714	0.536	0.000	0.000
10.0		0.535	0.721	0.260	0.463	-0.175
24.0		0.040	0.321	0.230	-0.381	-0.025
33.0		0.343	0.000	0.000	-0.020	-0.149
54.0		0.267	0.010	-0.014	-0.402	-0.106
73.5		-3.067	0.225	0.040	-2.277	-0.020
84.0		-0.236	0.240	-1.070	0.440	0.107
96.0		1.035	-0.021	0.400	-0.056	-0.213

RUN 320 POINT 1 ALPHA 8.07 PSI -5.01 HEIGHT 48.00

X/C, %		BP 2	BP 6	BP 12	BP 16	BP 22
0.0	(UPPER)	-2.906	-3.070	-2.010	-2.900	-1.053
2.5		-1.400	-3.301	-2.305	-2.141	-1.725
5.0		-1.237	-1.070	-2.501	-2.115	-1.447
10.0		-0.943	-0.000	-2.303	-2.001	-1.017
15.0		-0.000	-1.005	-1.773	-2.414	-1.237
24.0		-0.941	-0.070	-0.000	-2.213	-1.715
33.0		-0.790	-0.030	-0.003	-1.337	-1.717
54.0		0.410	-0.540	-0.007	-2.730	-1.000
65.0		-0.204	-2.002	-1.307	-1.104	-1.530
75.5		-0.304	-4.710	-3.190	-3.001	-2.007
79.5		-91.507	-78.205	-4.002	22.003	31.194
80.5		-8.102	-6.100	0.043	-3.770	-0.741
81.5		-4.035	-4.311	-4.224	-2.747	-4.441
82.0		-0.076	-1.791	-0.074	-2.970	-3.054
84.0		-8.041	-8.530	-0.017	-2.010	-2.071
87.0		0.000	-5.027	-2.007	-2.427	-1.447
89.0		-1.530	-2.130	-2.305	-1.700	-1.004
93.0		-1.275	-0.072	-2.177	-1.700	-0.023
96.0		-1.257	-0.001	-1.001	-1.401	-1.275
100.0		-1.253	-1.507	-0.575	-0.904	-1.232
2.5	(LOWER)	0.300	0.500	0.305	0.107	0.300
5.0		0.230	0.024	0.545	0.227	0.203
10.0		0.540	0.574	0.421	0.406	0.142
24.0		0.240	0.304	0.230	0.036	0.120
33.0		0.402	0.204	0.255	0.202	-0.011
54.0		0.406	0.205	0.251	-0.017	-3.061
73.5		-1.030	0.501	0.300	-0.037	0.125
84.0		0.313	0.564	-1.022	0.504	0.200
96.0		0.901	0.100	0.452	0.206	-0.000

WING PRESSURE COEFFICIENTS

RUN 320 POINT 1 ALPHA 8.07 PSI -5.01 HEIGHT 40.10

X/C, %		BP 2	BP 6	BP 12	BP 16	BP 22
0.0	(UPPER)	-2.440	-3.075	-3.288	-2.827	-1.756
2.5		-1.474	-2.983	-2.316	-2.500	-1.056
5.0		-1.183	-1.182	-2.219	-2.019	-1.511
10.0		-0.021	-0.954	-1.713	-2.754	-1.740
15.0		-0.784	-0.978	-1.240	-2.204	-1.452
24.0		-0.799	-0.517	-0.800	-1.100	-1.000
33.0		-0.604	-0.741	-0.798	-0.737	-1.017
54.0		-0.373	-0.604	-0.876	-1.431	-1.400
66.0		-0.101	-1.071	-1.004	-0.800	-1.340
78.5		-0.157	-3.834	-1.700	-1.000	-2.520
79.5		-43.014	-44.136	-1.051	11.583	14.122
80.5		-5.500	-5.390	0.241	-1.436	-0.356
81.5		-2.570	-1.736	-1.078	-1.204	-1.778
82.0		-1.100	-1.030	-0.907	-0.983	-1.470
84.0		-4.134	-0.102	-0.120	-1.780	-1.024
87.0		-0.054	-3.147	-1.578	-1.733	-1.471
88.0		-1.001	-1.531	-1.348	-1.524	-1.710
93.0		-0.005	-0.004	-1.440	-1.745	-0.021
96.0		-0.020	-0.810	-1.402	-1.510	-1.420
100.0		-0.437	-0.840	-1.131	-1.217	-1.307
2.5	(LOWER)	0.524	0.570	0.417	0.270	0.385
5.0		0.400	0.548	0.531	0.412	0.361
10.0		0.510	0.604	0.441	0.475	0.245
24.0		0.205	0.387	0.348	0.180	0.161
33.0		0.300	0.223	0.205	0.204	-0.012
54.0		0.201	0.335	0.320	0.170	-1.950
73.5		-0.005	0.000	0.407	0.131	0.240
84.0		0.547	0.607	-1.015	0.524	0.250
96.0		0.611	0.493	0.326	0.207	0.027

RUN 320 POINT 2 ALPHA 8.06 PSI -5.01 HEIGHT 65.01

X/C, %		BP 2	BP 6	BP 12	BP 16	BP 22
0.0	(UPPER)	-2.304	-3.790	-3.182	-2.170	-1.773
2.5		-1.425	-2.250	-2.145	-2.[illegible]	-1.056
5.0		-1.120	-1.250	-1.983	-2.745	-1.504
10.0		-0.098	-0.970	-1.987	-2.823	-1.724
15.0		-0.778	-0.900	-1.161	-2.005	-1.420
24.0		-0.795	-0.823	-0.864	-0.903	-1.587
33.0		-0.675	-0.746	-0.750	-0.793	-1.983
54.0		-0.300	-0.000	-0.600	-1.429	-1.417
66.0		-0.120	-1.000	-1.000	-0.810	-1.172
78.5		-0.176	-3.042	-1.731	-1.979	-2.500
79.5		-44.021	-44.202	-1.500	11.824	14.067
80.5		-5.614	-5.000	0.175	-1.487	-0.402
81.5		-3.021	-1.734	-1.711	-1.420	-1.776
82.0		-1.135	-1.975	-0.829	-0.001	-1.400
84.0		-4.100	-4.116	-0.131	-1.776	-1.023
87.0		-0.078	-3.183	-1.906	-1.753	-1.402
88.0		-1.123	-1.526	-1.362	-1.504	-1.756
93.0		-0.031	-0.012	-1.444	-1.725	-0.044
96.0		-0.000	-0.832	-1.400	-1.510	-1.473
100.0		-0.504	-0.800	-1.140	-1.201	-1.232
2.5	(LOWER)	0.500	0.500	0.402	0.200	0.300
5.0		0.305	0.531	0.510	0.410	0.302
10.0		0.402	0.500	0.427	0.464	0.236
24.0		0.200	0.354	0.327	0.100	0.147
33.0		0.344	0.204	0.200	0.255	-0.030
54.0		0.375	0.315	0.314	0.150	-1.504
73.5		-0.000	0.001	0.473	0.120	0.250
84.0		0.517	0.050	-1.067	0.512	0.304
96.0		0.001	0.402	0.320	0.190	0.030

WING PRESSURE COEFFICIENTS

RUN 320 POINT 3 ALPHA 8.06 PSI -5.01 HEIGHT 87.06

X/C, %		BP 2	BP 6	BP 12	BP 16	BP 22
0.0	(UPPER)	-2.222	-3.527	-2.730	-2.020	-1.926
2.5		-1.377	-3.007	-2.000	-2.322	-1.732
5.0		-1.104	-1.201	-2.226	-2.305	-1.452
10.0		-0.015	-0.800	-1.922	-2.013	-1.013
15.0		-0.702	-1.071	-1.355	-2.434	-1.382
24.0		-0.040	-0.020	-0.884	-1.041	-1.710
33.0		-0.774	-0.841	-0.787	-0.002	-1.720
54.0		-0.410	-0.020	-1.017	-3.753	-1.000
66.0		-0.240	-2.050	-1.320	-1.120	-1.387
78.5		-0.357	-4.007	-2.437	-2.505	-3.071
79.5		-91.530	-75.520	-4.150	23.070	30.767
80.5		-3.007	-0.045	0.023	-3.790	-0.700
81.5		-4.074	-4.376	-4.201	-3.150	-4.442
82.0		-0.123	-1.063	-0.711	-2.037	-3.032
84.0		-6.712	-0.430	0.378	-2.002	-2.027
87.0		0.570	-4.063	-2.302	-2.510	-1.420
88.0		-1.579	-2.190	-1.005	-2.011	-1.037
93.0		-1.318	-1.122	-2.047	-2.238	-0.000
96.0		-1.300	-1.004	-1.073	-1.755	-1.272
100.0		-1.370	-1.750	-1.130	-0.043	-1.240
2.5	(LOWER)	0.390	0.505	0.333	0.111	0.383
5.0		0.227	0.500	0.531	0.313	0.278
10.0		0.510	0.045	0.390	0.400	0.118
24.0		0.107	0.347	0.290	0.007	0.100
33.0		0.266	0.243	0.217	0.171	-0.050
54.0		0.361	0.222	0.307	-0.042	-2.002
73.5		-1.000	0.488	0.373	-0.043	0.151
84.0		0.280	0.547	-1.712	0.562	0.310
96.0		0.661	0.130	0.250	0.171	-0.065

RUN 320 POINT 4 ALPHA 8.06 PSI -5.01 HEIGHT 95.03

X/C, %		BP 2	BP 6	BP 12	BP 16	BP 22
0.0	(UPPER)	-2.200	-3.614	-2.730	-2.740	-1.944
2.5		-1.440	-2.104	-2.104	-2.251	-1.763
5.0		-1.234	-1.400	-2.373	-2.227	-1.475
10.0		-0.040	-0.874	-2.122	-2.537	-1.040
15.0		-0.831	-1.105	-1.534	-2.400	-1.402
24.0		-0.000	-0.941	-0.000	-1.027	-1.740
33.0		-0.707	-0.006	-0.772	-1.052	-1.735
54.0		-0.423	-0.004	-1.030	-3.038	-1.040
66.0		-0.254	-2.000	-1.303	-1.172	-1.447
78.5		-0.302	-4.730	-2.020	-2.022	-2.030
79.5		-83.222	-77.345	-4.227	23.542	31.447
80.5		-8.201	-8.200	0.044	-3.002	-0.745
81.5		-4.037	-4.446	-4.306	-3.703	-4.554
82.0		-0.074	-1.770	-0.024	-2.001	-3.064
84.0		-6.023	-6.052	0.140	-2.010	-3.040
87.0		0.505	-5.136	-2.545	-2.572	-1.477
88.0		-1.011	-2.200	-2.007	-2.003	-1.009
93.0		-1.250	-1.005	-2.214	-2.105	-0.077
96.0		-1.027	-1.010	-1.050	-1.034	-1.370
100.0		-1.367	-1.740	-0.001	-0.001	-1.335
2.5	(LOWER)	0.300	0.002	0.334	0.005	0.383
5.0		0.210	0.007	0.547	0.307	0.267
10.0		0.515	0.040	0.300	0.470	0.112
24.0		0.100	0.250	0.303	0.000	0.101
33.0		0.255	0.247	0.203	0.171	-0.050
54.0		0.305	0.230	0.200	-0.052	-4.000
73.5		-1.002	0.400	0.357	-0.070	0.120
84.0		0.200	0.530	-1.035	0.551	0.291
96.0		0.000	0.120	0.305	0.102	-0.105

WING PRESSURE COEFFICIENTS

RUN 330 POINT 3 ALPHA 0.00 PSI -5.01 HEIGHT 00 73

X/C. %		BP 2	BP 6	BP 12	BP 16	BP 22
0.0	(UPPER)	-2.220	-3.012	-3.136	-3.000	-1.814
2.5		-1.441	-1.883	-2.168	-2.795	-1.888
5.0		-1.141	-1.311	-1.999	-2.832	-1.531
10.0		-0.910	-0.887	-1.575	-2.016	-1.754
15.0		-0.723	-1.010	-1.129	-1.979	-1.440
24.0		-0.822	-0.830	-0.864	-0.903	-1.612
33.0		-0.885	-0.787	-0.890	-0.710	-1.613
54.0		-0.408	-0.825	-0.908	-1.447	-1.421
65.0		-0.145	-2.005	-1.120	-0.830	-1.108
78.5		-0.108	-3.006	-1.775	-1.500	-2.500
79.5		-44.510	-44.701	-1.063	11.822	14.220
80.5		-5.704	-5.834	0.184	-1.495	-0.412
81.5		-2.713	-1.765	-1.888	-1.428	-1.818
82.0		-1.185	-2.011	-0.836	-0.888	-1.505
84.0		-4.261	-4.188	-0.143	-1.860	-1.039
87.0		-0.102	-3.219	-1.807	-1.750	-1.529
90.0		-1.190	-1.563	-1.350	-1.518	-1.802
93.0		-0.860	-0.954	-1.472	-1.743	-0.668
96.0		-0.995	-0.871	-1.446	-1.534	-1.556
100.0		-0.546	-0.814	-1.184	-1.295	-1.260
2.5	(LOWER)	0.510	0.561	0.407	0.278	0.398
5.0		0.385	0.517	0.512	0.400	0.352
10.0		0.483	0.582	0.400	0.455	0.224
24.0		0.243	0.333	0.300	0.153	0.135
33.0		0.325	0.282	0.258	0.238	-0.041
54.0		0.360	0.290	0.296	0.137	-1.585
73.5		-0.100	0.593	0.466	0.123	0.248
84.0		0.508	0.643	-1.713	0.508	0.360
96.0		0.796	0.449	0.313	0.180	0.027

WING PRESSURE COEFFICIENTS

RUN 331 POINT 2 ALPHA 0.01 PSI 0.00 HEIGHT 22.00

X/C. %		BP 2	BP 6	BP 12	BP 16	BP 22
0.0	(UPPER)	0.430	0.132	-0.247	-0.002	-0.820
2.5		-0.380	-0.437	-0.878	-0.883	-1.040
5.0		-0.370	-0.417	-0.870	-0.802	-0.840
10.0		-0.340	-0.305	-0.983	-0.825	-0.728
15.0		-0.330	-0.510	-0.307	-0.804	-0.406
24.0		-0.450	-0.440	-0.384	-0.872	-0.922
33.0		-0.300	-0.435	-0.434	-0.518	-0.906
54.0		-0.413	-0.573	-0.834	-1.482	-0.518
65.0		-0.040	-2.031	-0.804	-0.707	-0.613
78.5		-0.102	-3.294	-1.560	-1.200	-2.290
79.5		-43.001	-42.583	-1.000	12.403	14.081
80.5		-5.206	-4.388	0.188	-1.527	-0.331
81.5		-2.500	-1.791	-1.740	-1.472	-1.050
82.0		-1.070	-1.553	-0.474	-1.060	-1.552
84.0		-4.145	-3.086	0.004	-1.481	-1.070
87.0		-0.120	-2.796	-1.271	-1.454	-1.523
90.0		-1.073	-1.421	-1.128	-1.219	-1.050
93.0		-0.828	-0.888	-1.102	-1.450	0.053
96.0		-0.875	-0.829	-1.212	-1.256	-1.386
100.0		-0.674	-0.804	-1.006	-1.153	1.000
2.5	(LOWER)	0.194	0.382	0.340	0.282	0.421
5.0		0.087	0.313	0.258	0.258	0.263
10.0		0.257	0.347	0.242	0.300	0.120
24.0		0.127	0.222	0.233	0.053	0.115
33.0		0.241	0.210	0.195	0.170	0.051
54.0		0.350	0.295	0.304	0.187	-1.578
73.5		-0.116	0.540	0.486	0.004	0.384
84.0		0.455	0.581	-1.703	0.818	0.464
96.0		0.741	0.383	0.370	0.248	0.196

RUN 331 POINT 1 ALPHA 0.03 PSI 0.00 HEIGHT 10 00

X/C. %		BP 2	BP 6	BP 12	BP 16	BP 22
0.0	(UPPER)	0.256	-0.033	-0.545	-1.050	-1.298
2.5		-0.415	-0.517	-0.830	-1.201	-1.247
5.0		-0.410	-0.475	-0.884	-0.874	-0.730
10.0		-0.380	-0.402	-0.831	-0.887	-0.793
15.0		-0.363	-0.526	-0.430	-0.844	-0.442
24.0		-0.474	-0.472	-0.415	-0.807	-0.545
33.0		-0.416	-0.400	-0.446	-0.537	-0.515
54.0		-0.418	-0.583	-0.834	-1.440	-0.511
65.0		-0.025	-1.983	-0.872	-0.702	-0.578
78.5		-0.077	-3.180	-1.582	-1.210	-1.811
79.5		-43.153	-42.135	-1.058	12.311	14.827
80.5		-4.918	-4.177	0.206	-1.496	-0.317
81.5		-3.243	-1.785	-1.700	-1.443	-1.824
82.0		-0.875	-1.485	-0.476	-1.034	-1.511
84.0		-3.888	-3.827	0.052	-1.450	-1.041
87.0		0.100	-2.005	-1.410	-1.412	-1.225
90.0		-0.878	-1.317	-1.178	-1.188	-1.812
93.0		-0.847	-0.710	-1.248	-1.362	0.075
96.0		-0.701	-0.884	-1.254	-1.191	-1.563
100.0		-0.550	-0.750	-1.138	-1.175	-1.327
2.5	(LOWER)	0.238	0.427	0.388	0.311	0.458
5.0		0.143	0.370	0.400	0.300	0.308
10.0		0.307	0.403	0.287	0.349	0.180
24.0		0.195	0.277	0.258	0.104	0.138
33.0		0.318	0.271	0.246	0.216	0.072
54.0		0.475	0.348	0.344	0.183	-1.564
73.5		-0.118	0.588	0.481	0.095	0.352
84.0		0.485	0.583	-1.706	0.570	0.453
96.0		0.824	0.386	0.394	0.220	0.088

WING PRESSURE COEFFICIENTS

RUN 331 POINT 3 ALPHA -0.01 PSI 0.00 HEIGHT 00.01

X/C. %		BP 2	BP 6	BP 12	BP 16	BP 22
0.0	(UPPER)	0.481	0.251	-0.031	-0.418	-0.516
2.5		-0.330	-0.386	-0.595	-0.753	-0.907
5.0		-0.380	-0.402	-0.810	-0.583	-0.812
10.0		-0.349	-0.353	-0.996	-0.810	-0.732
15.0		-0.320	-0.515	-0.407	-0.901	-0.200
24.0		-0.476	-0.480	-0.382	-0.800	-0.532
33.0		-0.418	-0.454	-0.432	-0.533	-0.520
54.0		-0.400	-0.508	-0.856	-1.450	-0.543
65.0		-0.106	-2.080	-0.900	-0.748	-0.050
78.5		-0.165	-3.330	-1.618	-1.283	-2.496
79.5		-44.120	-43.058	-1.734	12.510	13.772
80.5		-5.494	-4.532	0.210	-1.520	-0.383
81.5		-3.612	-1.800	-1.775	-1.503	-1.880
82.0		-1.173	-1.825	-0.524	-1.087	-1.594
84.0		-4.208	-3.788	0.087	-1.602	-1.086
87.0		-0.210	-2.851	-1.437	-1.576	-1.052
90.0		-1.150	-1.481	-1.158	-1.324	-1.027
93.0		-0.805	-0.815	-1.222	-1.581	-1.011
96.0		-0.930	-0.870	-1.237	-1.363	-1.305
100.0		-0.762	-0.832	-1.005	-1.255	-0.948
2.5	(LOWER)	0.124	0.298	0.271	0.300	0.381
5.0		0.035	0.252	0.287	0.190	0.206
10.0		0.200	0.286	0.188	0.240	0.071
24.0		0.071	0.184	0.151	0.001	0.078
33.0		0.190	0.150	0.142	0.134	-0.007
54.0		0.312	0.247	0.205	0.130	-1.588
73.5		-0.190	0.567	0.481	0.195	0.378
84.0		0.449	0.581	-1.886	0.617	0.481
96.0		0.803	0.378	0.350	0.232	0.214

WING PRESSURE COEFFICIENTS

RUN 331 POINT 4 ALPHA -0.03 PSI 0.00 HEIGHT 87.63

X/C. %		DP 2	DP 6	DP 12	DP 16	DP 22
0.0	UPPER	0.400	0.270	0.063	-0.377	-0.470
2.5		-0.322	-0.374	-0.583	-0.746	-0.806
5.0		-0.381	-0.380	-0.517	-0.577	-0.811
10.0		-0.360	-0.368	-0.579	-0.629	-0.743
15.0		-0.352	-0.514	-0.411	-0.606	-0.403
24.0		-0.483	-0.458	-0.305	-0.801	-0.545
33.0		-0.430	-0.474	-0.441	-0.541	-0.540
54.0		-0.412	-0.806	-0.867	-1.485	-0.564
65.0		-0.129	-2.111	-0.290	-0.700	-0.677
78.5		-0.175	-3.370	-1.043	-1.300	-2.571
79.5		-44.544	-43.422	-1.754	12.083	13.714
80.5		-5.588	-4.004	0.221	-1.573	-0.420
81.5		-3.058	-1.046	-1.767	-1.540	-1.080
82.0		-1.102	-1.082	-0.536	-1.087	-1.007
84.0		-4.222	-3.836	0.068	-1.027	-1.068
87.0		-0.238	-2.604	-1.400	-1.611	-1.572
88.0		-1.174	-1.400	-1.178	-1.371	-1.045
93.0		-0.220	-0.030	-1.246	-1.026	-0.016
96.0		-0.050	-0.086	-1.200	-1.308	-1.310
100.0		-0.783	-0.061	-1.008	-1.308	-0.336
2.5	LOWER	0.088	0.273	0.244	0.177	0.325
5.0		-0.007	0.290	0.270	0.174	0.192
10.0		0.104	0.208	0.181	0.227	0.058
24.0		0.057	0.148	0.137	-0.014	0.004
33.0		0.170	0.137	0.126	0.121	-0.018
54.0		0.300	0.230	0.254	0.126	-1.007
73.5		-0.112	0.504	0.474	0.108	0.305
84.0		0.440	0.508	-1.074	0.015	0.474
96.0		0.088	0.372	0.354	0.224	0.213

RUN 332 POINT 1 ALPHA 0.13 PSI 0.00 HEIGHT 10.07

X/C. %		DP 2	DP 6	DP 12	DP 16	DP 22
0.0	UPPER	0.505	0.303	0.202	-0.053	-0.030
2.5		-0.233	-0.241	-0.358	-0.487	-0.545
5.0		-0.288	-0.283	-0.429	-0.382	-0.338
10.0		-0.258	-0.228	-0.382	-0.435	-0.522
15.0		-0.223	-0.308	-0.236	-0.422	-0.199
24.0		-0.272	-0.324	-0.217	-0.546	-0.344
33.0		-0.219	-0.295	-0.250	-0.334	-0.323
54.0		-0.356	-0.283	-0.368	-1.463	-0.230
65.0		-0.041	-0.328	-0.408	-0.400	-0.186
78.5		-0.004	-0.042	-1.017	-0.057	-0.405
79.5		-0.487	-0.336	-1.784	-0.828	-0.878
80.5		-0.086	-0.350	0.250	-1.542	-0.330
81.5		-1.065	-1.032	-1.828	-1.507	-1.007
82.0		-1.191	-0.270	-0.321	-1.087	-1.006
84.0		-0.480	-1.012	0.475	-1.006	-1.130
87.0		-0.371	-0.047	-0.050	-0.001	-0.194
88.0		-0.304	-0.478	-0.523	-0.611	-0.564
93.0		-0.448	-0.407	-0.568	-0.756	0.071
96.0		-0.453	-0.334	-0.674	-0.838	-0.445
100.0		-0.330	-0.403	-0.560	-0.534	-0.631
2.5	LOWER	0.007	0.271	0.211	0.145	0.278
5.0		0.018	0.254	0.247	0.153	0.182
10.0		0.163	0.267	0.158	0.230	0.053
24.0		0.074	0.180	0.143	-0.008	0.002
33.0		0.166	0.156	0.150	0.135	0.005
54.0		0.304	0.238	0.282	0.153	-1.500
73.5		-0.137	0.502	0.503	0.081	0.438
84.0		0.401	0.553	-0.615	0.037	0.535
96.0		0.501	0.335	0.434	0.327	0.271

WING PRESSURE COEFFICIENTS

RUN 332 POINT 2 ALPHA 0.13 PSI 0.00 HEIGHT 22.00

X/C. %		DP 2	DP 6	DP 12	DP 16	DP 22
0.0	UPPER	0.500	0.481	0.208	0.005	0.148
2.5		-0.340	-0.180	-0.288	-0.381	-0.432
5.0		-0.247	-0.238	-0.388	-0.253	-0.273
10.0		-0.235	-0.204	-0.308	-0.306	-0.404
15.0		-0.210	-0.373	-0.272	-0.363	-0.170
24.0		-0.258	-0.302	-0.299	-0.405	-0.230
33.0		-0.205	-0.275	-0.351	-0.337	-0.314
54.0		-0.220	-0.273	-0.390	-1.454	-0.235
65.0		-0.054	-0.339	-0.481	-0.301	-0.181
78.5		-0.100	-0.606	-1.063	-0.837	-0.403
79.5		-0.515	-0.383	-1.748	-0.600	-0.914
80.5		-0.082	-0.878	0.904	-1.522	-0.388
81.5		-1.071	-1.033	-1.012	-1.040	-1.010
82.0		-1.181	-0.302	-0.221	-1.081	-1.014
84.0		-0.400	-1.041	0.404	-0.001	-1.141
87.0		-0.371	-0.008	-0.018	-0.082	-0.210
88.0		-0.311	-0.406	-0.538	-0.508	-0.573
93.0		-0.052	-0.516	-0.500	-0.736	0.064
96.0		-0.402	-0.365	-0.088	-0.021	-0.406
100.0		-0.340	-0.427	-0.556	-0.518	-0.054
2.5	LOWER	0.056	0.212	0.188	0.082	0.217
5.0		-0.043	0.304	0.201	0.104	0.113
10.0		0.196	0.222	0.118	0.170	0.013
24.0		0.034	0.117	0.106	-0.041	0.071
33.0		0.147	0.108	0.110	0.105	0.060
54.0		0.200	0.205	0.245	0.13[illegible]	-1.500
73.5		-0.136	0.485	0.408	0.080	0.442
84.0		0.380	0.544	-0.632	0.027	0.536
96.0		0.508	0.328	0.425	0.230	0.273

RUN 332 POINT 3 ALPHA 0.11 PSI 0.00 HEIGHT 05.70

X/C. %		DP 2	DP 6	DP 12	DP 16	DP 22
0.0	UPPER	0.004	0.481	0.443	0.108	0.242
2.5		-0.108	-0.140	-0.234	-0.315	-0.383
5.0		-0.222	-0.215	-0.244	-0.254	-0.220
10.0		-0.230	-0.187	-0.320	-0.308	-0.408
15.0		-0.208	-0.363	-0.101	-0.302	-0.190
24.0		-0.353	-0.306	-0.183	-0.470	-0.304
33.0		-0.305	-0.279	-0.244	-0.320	-0.314
54.0		-0.304	-0.277	-0.368	-1.401	-0.230
65.0		-0.048	-0.324	-0.408	-0.302	-0.283
78.5		-0.125	-0.606	-1.000	-0.635	-0.510
79.5		-0.522	-0.306	-1.744	-0.503	-0.931
80.5		-0.080	-0.915	0.283	-1.541	-0.350
81.5		-1.105	-1.082	-1.012	-1.515	-1.080
82.0		-1.198	-0.290	-0.301	-1.107	-1.080
84.0		-0.480	-1.068	0.512	-0.002	-1.107
87.0		-0.357	-0.008	-0.051	-0.017	-0.212
88.0		-0.324	-0.408	-0.541	-0.502	-0.501
93.0		-0.486	-0.527	-0.508	-0.738	0.040
96.0		-0.470	-0.386	-0.085	-0.020	-0.408
100.0		-0.302	-0.444	-0.080	-0.512	-0.077
2.5	LOWER	0.010	0.106	0.107	0.027	0.108
5.0		-0.000	0.172	0.194	0.001	0.007
10.0		0.110	0.100	0.000	0.144	-0.072
24.0		0.000	0.002	0.000	-0.000	0.000
33.0		0.121	0.004	0.005	0.007	0.037
54.0		0.254	0.183	0.225	0.130	-1.500
73.5		-0.130	0.400	0.472	0.000	0.431
84.0		0.450	0.548	-0.050	0.014	0.534
96.0		0.551	0.337	0.418	0.316	0.300

WING PRESSURE COEFFICIENTS

RUN 333 POINT 4 ALPHA -0.03 PSI 0.00 HEIGHT 06.03

X/C.	X	DP 2	DP 6	DP 12	DP 16	DP 22
0.0	UPPER	0.610	0.521	0.474	0.210	0.200
2.5		-0.126	-0.106	-0.187	-0.261	-0.300
5.0		-0.202	-0.170	-0.217	-0.211	-0.160
10.0		-0.160	-0.145	-0.311	-0.330	-0.436
15.0		-0.150	-0.329	-0.170	-0.363	-0.120
24.0		-0.229	-0.200	-0.170	-0.400	-0.301
33.0		-0.247	-0.200	-0.223	-0.314	-0.206
54.0		-0.202	-0.256	-0.340	-1.425	-0.220
65.0		-0.060	-0.317	-0.477	-0.373	-0.166
70.5		-0.110	-0.066	-0.061	-0.012	-0.402
75.5		-0.520	-0.367	-1.704	-0.060	-0.021
80.5		-0.002	-0.002	0.311	-1.400	-0.360
81.5		-1.067	-1.030	-1.778	-1.400	-1.002
82.0		-1.195	-0.205	-0.200	-1.000	-1.500
84.0		-0.407	-1.024	0.526	-0.900	-1.130
87.0		-0.375	-0.044	-0.010	-0.003	-0.200
90.0		-0.303	-0.400	-0.510	-0.570	-0.573
93.0		-0.405	-0.500	-0.500	-0.714	0.050
96.0		-0.467	-0.347	-0.675	-0.500	-0.473
100.0		-0.242	-0.415	-0.540	-0.400	-0.004
2.5	LOWER	-0.002	0.140	0.002	0.040	0.154
5.0		-0.060	0.175	0.147	0.061	0.062
10.0		0.110	0.176	0.077	0.137	-0.022
24.0		0.000	0.003	0.000	-0.000	0.057
33.0		0.127	0.005	0.002	0.000	0.044
54.0		0.200	0.186	0.234	0.124	-1.557
73.5		-0.110	0.400	0.473	0.190	0.442
84.0		0.402	0.540	-0.633	0.610	0.542
93.0		0.567	0.330	0.424	0.331	0.278

RUN 333 POINT 1 ALPHA 0.02 PSI -5.01 HEIGHT 07.51

X/C.	X	DP 2	DP 6	DP 12	DP 16	DP 22
0.0	UPPER	-1.400	-2.517	-2.276	-2.046	-1.494
2.5		-1.071	-1.700	-1.370	-2.220	-1.156
5.0		-0.067	-0.042	-1.304	-2.270	-0.074
10.0		-0.004	-0.003	-1.070	-1.700	-1.214
15.0		-0.502	-0.745	-0.745	-0.057	-0.004
24.0		-0.013	-0.500	-0.500	-0.700	-0.070
33.0		-0.404	-0.400	-0.500	-0.503	-0.002
54.0		-0.200	-0.300	-0.504	-1.454	-0.001
65.0		-0.000	-0.410	-0.570	-0.400	-0.521
70.5		-0.121	-0.075	-0.030	-0.005	-0.020
75.5		-0.555	-0.355	-1.700	-0.551	-1.030
80.5		-0.770	-0.000	0.203	-1.504	-0.370
81.5		-1.102	-1.000	-1.040	-1.030	-1.000
82.0		-1.303	-0.207	-0.100	-1.110	-1.007
84.0		-0.500	-1.034	0.050	-1.070	-1.100
87.0		-0.454	-0.004	-0.702	-0.021	-0.532
90.0		-0.307	-0.400	-0.477	-0.007	-0.003
93.0		-0.041	-0.510	-0.520	-0.700	0.044
96.0		-0.041	-0.240	-0.045	-0.040	-0.005
100.0		-0.407	-0.300	-0.402	-0.540	-0.021
2.5	LOWER	0.472	0.571	0.422	0.315	0.441
5.0		0.323	0.401	0.505	0.304	0.306
10.0		0.450	0.505	0.300	0.445	0.310
24.0		0.200	0.307	0.279	0.110	0.144
33.0		0.304	0.240	0.232	0.224	0.045
54.0		0.324	0.205	0.206	0.141	-1.505
73.5		-0.150	0.536	0.470	0.002	0.330
84.0		0.057	0.400	-0.050	0.500	0.402
93.0		0.022	0.265	0.441	0.275	0.130

WING PRESSURE COEFFICIENTS

RUN 333 POINT 2 ALPHA 0.01 PSI -5.01 HEIGHT 06.03

X/C.	X	DP 2	DP 6	DP 12	DP 16	DP 22
0.0	UPPER	-1.410	-2.440	-2.363	-2.515	-1.422
2.5		-1.051	-1.404	-1.700	-1.017	-1.116
5.0		-0.001	-0.072	-1.572	-1.010	-0.030
10.0		-0.006	-0.005	-1.007	-1.000	-1.188
15.0		-0.573	-0.740	-0.077	-1.170	-0.000
24.0		-0.007	-0.074	-0.523	-0.720	-0.040
33.0		-0.400	-0.501	-0.470	-0.430	-0.000
54.0		-0.202	-0.400	-0.500	-1.070	-0.037
65.0		-0.075	-0.427	-0.563	-0.407	-0.040
70.5		-0.137	-0.003	-0.000	-0.730	-0.007
75.5		-0.000	-0.374	-1.705	-0.003	-1.440
80.5		-0.773	-0.012	0.204	-1.027	-0.400
81.5		-1.222	-1.014	-1.005	-1.501	-1.073
82.0		-1.327	-0.217	-0.210	-1.102	-1.000
84.0		-0.013	-1.070	0.045	-1.000	-1.170
87.0		-0.402	-0.077	-0.700	-0.002	-0.013
90.0		-0.414	-0.515	-0.494	-0.020	-0.007
93.0		-0.020	-0.530	-0.502	-0.777	0.007
96.0		-0.000	-0.363	-0.000	-0.000	-0.017
100.0		-0.405	-0.300	-0.500	-0.563	-0.002
2.5	LOWER	0.450	0.571	0.420	0.315	0.403
5.0		0.313	0.404	0.400	0.300	0.343
10.0		0.430	0.570	0.303	0.430	0.103
24.0		0.102	0.202	0.207	0.007	0.135
33.0		0.270	0.230	0.222	0.200	0.045
54.0		0.325	0.251	0.302	0.130	-1.033
73.5		-0.150	0.540	0.473	0.071	0.330
84.0		0.053	0.440	-0.000	0.571	0.403
96.0		0.010	0.242	0.437	0.270	0.140

RUN 333 POINT 3 ALPHA 0.01 PSI -5.01 HEIGHT 07.00

X/C.	X	DP 2	DP 6	DP 12	DP 16	DP 22
0.0	UPPER	-1.330	-2.300	-2.417	-2.051	-1.411
2.5		-1.010	-1.350	-1.723	-1.050	-1.140
5.0		-0.003	-0.044	-1.430	-1.001	-0.000
10.0		-0.000	-0.002	-0.977	-1.071	-1.172
15.0		-0.544	-0.733	-0.030	-0.000	-0.050
24.0		-0.507	-0.503	-0.500	-0.075	-0.004
33.0		-0.401	-0.400	-0.404	-0.470	-0.034
54.0		-0.270	-0.302	-0.400	-1.040	-0.000
65.0		-0.073	-0.400	-0.500	-0.475	-0.471
70.5		-0.131	-0.075	-0.010	-0.037	-0.071
75.5		-0.572	-0.300	-1.770	-0.534	-1.417
80.5		-0.770	-0.003	0.303	-1.503	-0.304
81.5		-1.154	-1.010	-1.054	-1.525	-1.070
82.0		-1.275	-0.305	-0.107	-1.105	-1.010
84.0		-0.507	-1.072	0.047	-1.110	-1.177
87.0		-0.405	-0.072	-0.704	-0.005	-0.400
90.0		-0.305	-0.400	-0.470	-0.000	-0.002
93.0		-0.000	-0.510	-0.533	-0.750	0.030
96.0		-0.040	-0.341	-0.530	-0.042	-0.700
100.0		-0.472	-0.370	-0.475	-0.541	-0.074
2.5	LOWER	0.407	0.570	0.422	0.321	0.472
5.0		0.323	0.405	0.502	0.304	0.340
10.0		0.445	0.567	0.300	0.432	0.107
24.0		0.197	0.204	0.270	0.104	0.145
33.0		0.260	0.233	0.226	0.045	0.044
54.0		0.325	0.250	0.200	0.133	-1.503
73.5		-0.141	0.545	0.470	0.001	0.340
84.0		0.050	0.441	-0.042	0.575	0.471
96.0		0.072	0.241	0.440	0.202	0.150

WING PRESSURE COEFFICIENTS

RUN 337 POINT 2 ALPHA -0.04 PSI 0.00 HEIGHT 10.16

X/C, %		DP 2	DP 6	DP 12	DP 16	DP 22
0.0	(UPPER)	0.500	0.300	0.249	0.192	0.124
2.5		-0.221	-0.327	-0.467	-0.546	-0.680
5.0		-0.212	-0.304	-0.382	-0.418	-0.435
10.0		-0.241	-0.304	-0.364	-0.388	-0.386
15.0		-0.238	-0.281	-0.327	-0.345	-0.324
24.0		-0.230	-0.250	-0.278	-0.294	-0.268
33.0		-0.200	-0.241	-0.286	-0.250	-0.243
54.0		-0.063	-0.257	-0.273	1.642	-0.256
65.0		0.006	-0.330	-0.379	-0.380	-0.367
78.5		0.063	-0.536	-0.560	-0.663	-0.678
79.5		-0.431	-0.458	-0.533	-0.578	-0.720
80.5		-0.418	-0.420	-0.464	-0.574	0.067
81.5		-0.428	0.039	-0.519	-0.561	-0.005
82.0		-0.404	-0.410	-0.245	-0.588	-0.687
84.0		-0.443	-0.421	-0.513	-0.574	-0.723
87.0		-0.440	-0.436	-0.503	-0.540	-0.733
90.0		-0.448	-0.440	-0.514	-0.582	-0.701
93.0		-0.470	-0.458	-0.526	-0.588	0.003
96.0		-0.470	-0.440	-0.519	-0.588	-0.704
100.0		-0.307	-0.303	-0.486	-0.563	-0.700
2.5	(LOWER)	0.161	0.190	0.246	0.260	0.244
5.0		0.157	0.124	0.173	0.206	0.170
10.0		0.116	0.154	0.147	0.155	0.121
24.0		0.004	0.103	0.128	0.121	0.063
33.0		0.124	0.148	0.182	0.180	0.050
54.0		0.253	0.278	0.314	0.280	0.537
73.5		0.538	0.503	0.615	0.660	0.500
84.0		0.623	0.625	0.702	0.636	0.523
96.0		0.411	0.436	0.404	0.388	0.280

WING PRESSURE COEFFICIENTS

RUN 337 POINT 4 ALPHA 0.01 PSI 0.00 HEIGHT 05.00

X/C, %		DP 2	DP 6	DP 12	DP 16	DP 22
0.0	(UPPER)	0.361	0.487	0.407	0.304	0.302
2.5		-0.175	-0.262	-0.380	-0.301	-0.243
5.0		-0.102	-0.288	-0.330	-0.346	-0.361
10.0		-0.233	-0.284	-0.333	-0.302	-0.332
15.0		-0.228	-0.274	-0.307	-0.324	-0.301
24.0		-0.225	-0.256	-0.272	-0.292	-0.286
33.0		-0.207	-0.241	-0.282	-0.262	-0.251
54.0		-0.214	-0.264	-0.286	1.731	-0.272
65.0		0.020	-0.348	-0.381	-0.400	-0.387
78.5		0.024	-0.564	-0.606	-0.648	-0.706
79.5		-0.446	-0.498	-0.550	-0.610	-0.744
80.5		-0.428	-0.448	-0.515	-0.602	0.023
81.5		-0.429	1.029	-0.560	-0.578	-0.712
82.0		-0.380	-0.442	-0.277	-0.622	-0.714
84.0		-0.453	-0.444	-0.583	-0.610	-0.748
87.0		-0.474	-0.448	-0.542	-0.578	-0.750
90.0		-0.461	-0.485	-0.586	-0.623	-0.729
93.0		-0.475	-0.481	-0.580	-0.633	0.006
96.0		-0.471	-0.467	-0.584	-0.630	-0.734
100.0		-0.403	-0.474	-0.531	-0.620	-0.731
2.5	(LOWER)	0.073	0.100	0.146	0.180	0.140
5.0		0.073	0.050	0.080	0.121	0.095
10.0		0.048	0.074	0.071	0.085	0.064
24.0		0.020	0.041	0.067	0.068	0.086
33.0		0.055	0.080	0.115	0.130	0.010
54.0		0.215	0.242	0.294	0.275	0.614
73.5		0.520	0.570	0.610	0.726	0.510
84.0		0.542	0.623	0.730	0.620	0.532
96.0		0.384	0.427	0.388	0.390	0.290

RUN 337 POINT 3 ALPHA -0.00 PSI 0.00 HEIGHT 22.86

X/C, %		DP 2	DP 6	DP 12	DP 16	DP 22
0.0	(UPPER)	0.553	0.450	0.341	0.313	0.270
2.5		-0.182	-0.297	-0.415	-0.443	-0.408
5.0		-0.202	-0.294	-0.347	-0.378	-0.388
10.0		-0.245	-0.280	-0.340	-0.368	-0.351
15.0		-0.230	-0.273	-0.321	-0.335	-0.314
24.0		-0.221	-0.258	-0.273	-0.290	-0.268
33.0		-0.202	-0.240	-0.282	-0.261	-0.246
54.0		-0.087	-0.205	-0.280	1.605	-0.263
65.0		0.030	-0.341	-0.381	-0.382	-0.350
78.5		0.035	-0.547	-0.589	-0.631	-0.001
79.5		-0.434	-0.478	-0.542	-0.601	-0.745
80.5		-0.427	-0.432	-0.496	-0.600	0.032
81.5		-0.418	0.083	-0.540	-0.574	-0.710
82.0		-0.378	-0.428	-0.261	-0.602	-0.701
84.0		-0.448	-0.437	-0.542	-0.612	-0.728
87.0		-0.470	-0.438	-0.523	-0.560	-0.732
90.0		-0.443	-0.452	-0.530	-0.600	-0.715
93.0		-0.472	-0.470	-0.552	-0.618	0.033
96.0		-0.470	-0.455	-0.550	-0.616	-0.721
100.0		-0.307	-0.410	-0.517	-0.600	-0.710
2.5	(LOWER)	0.118	0.146	0.191	0.217	0.200
5.0		0.086	0.084	0.120	0.161	0.130
10.0		0.075	0.112	0.107	0.110	0.063
24.0		0.053	0.082	0.095	0.094	0.075
33.0		0.085	0.114	0.137	0.161	0.032
54.0		0.233	0.260	0.308	0.286	0.577
73.5		0.532	0.583	0.610	0.680	0.510
84.0		0.572	0.620	0.716	0.630	0.538
96.0		0.400	0.436	0.400	0.398	0.304

RUN 337 POINT 5 ALPHA -0.02 PSI 0.00 HEIGHT 07.00

X/C, %		DP 2	DP 6	DP 12	DP 16	DP 22
0.0	(UPPER)	0.500	0.511	0.447	0.420	0.400
2.5		-0.145	-0.225	-0.325	-0.342	-0.302
5.0		-0.184	-0.238	-0.290	-0.360	-0.326
10.0		-0.210	-0.257	-0.296	-0.322	-0.306
15.0		-0.206	-0.240	-0.283	-0.299	-0.277
24.0		-0.213	-0.237	-0.249	-0.271	-0.247
33.0		-0.184	-0.221	-0.263	-0.243	-0.232
54.0		-0.183	-0.240	-0.288	1.746	-0.258
65.0		0.038	-0.330	-0.372	-0.383	-0.378
78.5		0.033	-0.544	-0.588	-0.626	-0.002
79.5		-0.434	-0.478	-0.530	-0.663	-0.731
80.5		-0.407	-0.442	-0.482	-0.581	0.042
81.5		-0.300	1.063	-0.537	-0.587	-0.688
82.0		-0.374	-0.410	-0.266	-0.597	-0.000
84.0		-0.420	-0.413	-0.583	-0.600	-0.737
87.0		-0.440	-0.433	-0.518	-0.558	-0.735
90.0		-0.432	-0.448	-0.530	-0.608	-0.700
93.0		-0.454	-0.464	-0.552	-0.614	0.030
96.0		-0.450	-0.451	-0.546	-0.611	-0.717
100.0		-0.385	-0.412	-0.515	-0.603	-0.711
2.5	(LOWER)	0.080	0.001	0.128	0.150	0.130
5.0		0.085	0.050	0.080	0.115	0.005
10.0		0.040	0.072	0.072	0.083	0.058
24.0		0.035	0.044	0.072	0.072	0.063
33.0		0.063	0.086	0.110	0.145	0.031
54.0		0.221	0.250	0.301	0.280	0.050
73.5		0.522	0.573	0.614	0.767	0.520
84.0		0.547	0.624	-0.703	0.632	0.540
96.0		0.403	0.433	0.406	0.390	0.311

WING PRESSURE COEFFICIENTS

RUN 338 POINT 1 ALPHA -0.23 PSI 0.00 HEIGHT 10.20

X/C. %		BP 2	BP 6	BP 12	BP 16	BP 22
0.0	(UPPER)	0.020	-0.571	-1.617	-2.308	-3.272
2.5		-0.578	-0.836	-1.106	-1.500	-2.227
5.0		-0.482	-0.661	-0.951	-1.152	-1.484
10.0		-0.475	-0.610	-0.812	-0.963	-1.085
15.0		-0.454	-0.561	-0.716	-0.842	-0.884
24.0		-0.461	-0.534	-0.648	-0.754	-0.776
33.0		-0.450	-0.530	-0.662	-0.727	-0.788
54.0		-0.530	-0.735	-0.873	2.184	-1.080
65.0		0.110	-1.300	-1.316	-1.446	-1.054
78.5		0.106	-3.278	-3.022	-4.371	-4.735
79.5		-46.505	-39.303	-39.600	-44.329	-28.050
80.5		-4.012	-8.[illegible]80	-6.745	-10.238	0.123
81.5		-2.530	1.137	-4.021	-5.156	-7.435
82.0		-0.820	-2.683	-0.383	-4.168	-5.251
84.0		-2.886	-2.684	-3.500	-3.310	-4.305
87.0		-0.250	-2.275	-2.106	-2.431	-3.148
89.0		-0.582	-1.284	-2.453	-2.883	-2.417
93.0		-0.467	-0.848	-0.832	-1.855	0.114
96.0		-0.837	-0.550	-0.720	-0.958	-3.134
100.0		-0.138	-0.077	-0.101	-0.161	-0.064
2.5	(LOWER)	0.407	0.470	0.525	0.514	0.448
5.0		0.375	0.378	0.441	0.471	0.420
10.0		0.326	0.412	0.394	0.405	0.324
24.0		0.301	0.326	0.348	0.318	0.187
33.0		0.343	0.356	0.381	0.350	0.097
54.0		0.448	0.471	0.480	0.407	0.643
73.5		0.649	0.708	0.836	0.781	0.216
84.0		0.787	0.820	-3.406	0.529	0.156
96.0		0.654	0.716	0.673	0.580	0.174

RUN 338 POINT 2 ALPHA -0.08 PSI 0.00 HEIGHT 32.83

X/C. %		BP 2	BP 6	BP 12	BP 16	BP 22
0.0	(UPPER)	0.165	-0.457	-1.377	-2.082	-3.020
2.5		-0.501	-0.883	-1.127	-1.484	-1.910
5.0		-0.511	-0.683	-0.859	-1.151	-1.381
10.0		-0.518	-0.640	-0.832	-0.977	-1.089
15.0		-0.485	-0.593	-0.754	-0.877	-0.830
24.0		-0.486	-0.575	-0.686	-0.798	-0.825
33.0		-0.503	-0.584	-0.718	-0.781	-0.818
54.0		-0.555	-0.826	-0.864	2.185	-1.132
65.0		0.010	-1.337	-1.442	-1.567	-1.776
78.5		0.004	-3.884	-4.278	-4.884	-5.084
79.5		-51.328	-43.829	-42.887	-46.624	-29.242
80.5		-4.043	-7.417	-5.207	-10.754	0.019
81.5		-3.181	1.136	-4.380	-5.473	-7.807
82.0		-1.157	-3.180	-0.612	-4.490	-5.540
84.0		-3.533	-3.145	-3.828	-3.566	-4.513
87.0		-0.701	-2.857	-2.503	-2.638	-3.314
89.0		-1.039	-1.635	-2.732	-3.106	-2.542
93.0		-0.880	-0.833	-1.947	-2.056	0.008
96.0		-1.175	-0.707	-0.411	-1.104	-3.225
100.0		-0.189	-0.052	-0.067	-0.084	0.562
2.5	(LOWER)	0.356	0.423	0.401	0.508	0.478
5.0		0.318	0.298	0.369	0.448	0.418
10.0		0.264	0.359	0.348	0.374	0.310
24.0		0.224	0.262	0.302	0.283	0.187
33.0		0.285	0.300	0.336	0.344	-0.003
54.0		0.388	0.452	0.498	0.429	0.649
73.5		0.612	0.673	0.647	0.609	0.238
84.0		0.700	0.649	-3.533	0.583	0.149
96.0		0.618	0.747	0.724	0.659	0.258

WING PRESSURE COEFFICIENTS

RUN 338 POINT 3 ALPHA 0.00 PSI 0.00 HEIGHT 85.00

X/C. %		BP 2	BP 6	BP 12	BP 16	BP 22
0.0	(UPPER)	0.197	-0.238	-1.000	-1.561	-2.412
2.5		-0.566	-0.800	-1.268	-1.310	-1.543
5.0		-0.400	-0.707	-0.887	-1.031	-1.200
10.0		-0.516	-0.828	-0.829	-0.946	-1.037
15.0		-0.515	-0.586	-0.751	-0.861	-0.910
24.0		-0.566	-0.587	-0.703	-0.882	-0.821
33.0		-0.521	-0.612	-0.736	-0.701	-0.826
54.0		-0.562	-0.854	-0.983	2.230	-1.130
65.0		-0.068	-1.388	-1.484	-1.800	-1.798
78.5		-0.073	-3.828	-4.380	-4.790	-5.064
79.5		-53.205	-45.945	-44.401	-47.727	-29.145
80.5		-4.113	-7.840	-5.382	-10.017	-0.036
81.5		-3.425	1.183	-4.466	-5.578	-7.727
82.0		-1.298	-3.355	-0.883	-4.504	-5.050
84.0		-3.732	-3.284	-3.988	-3.866	-4.439
87.0		-0.850	-2.781	-2.588	-2.727	-3.227
89.0		-1.175	-1.737	-2.837	-2.186	-2.461
93.0		-1.007	-1.021	-1.121	-2.111	-0.068
96.0		-1.278	-0.875	-0.475	-1.158	-3.204
100.0		-0.260	-0.106	-0.163	-0.148	-0.013
2.5	(LOWER)	0.295	0.348	0.400	0.470	0.400
5.0		0.250	0.230	0.326	0.395	0.371
10.0		0.194	0.288	0.281	0.318	0.200
24.0		0.157	0.187	0.241	0.238	0.147
33.0		0.198	0.241	0.273	0.280	-0.079
54.0		0.351	0.403	0.446	0.383	0.666
73.5		0.578	0.642	0.850	0.824	0.257
84.0		0.572	0.628	-3.561	0.586	0.171
96.0		0.574	0.724	0.705	0.632	0.266

RUN 338 POINT 4 ALPHA -0.02 PSI 0.00 HEIGHT 87.00

X/C. %		BP 2	BP 6	BP 12	BP 16	BP 22
0.0	(UPPER)	0.232	-0.161	-0.861	-1.388	-2.230
2.5		-0.535	-0.770	-1.237	-1.238	-1.485
5.0		-0.477	-0.686	-0.854	-1.038	-1.254
10.0		-0.501	-0.663	-0.848	-0.918	-1.010
15.0		-0.500	-0.568	-0.728	-0.838	-0.888
24.0		-0.488	-0.581	-0.688	-0.786	-0.866
33.0		-0.510	-0.586	-0.725	-0.776	-0.866
54.0		-0.548	-0.848	-0.981	2.231	-1.120
65.0		-0.068	-1.377	-1.476	-1.560	-1.781
78.5		-0.074	-3.706	-4.361	-4.751	-5.012
79.5		-53.753	-45.782	-44.770	-47.954	-28.867
80.5		-3.853	-7.555	-5.245	-10.787	-0.037
81.5		-3.456	1.188	-4.385	-5.402	-7.630
82.0		-1.275	-3.324	-0.681	-4.538	-5.378
84.0		-3.718	-3.250	-3.943	-3.833	-4.237
87.0		-0.842	-2.770	-2.588	-2.704	-3.187
89.0		-1.180	-1.731	-2.820	-3.183	-2.442
93.0		-1.011	-1.020	-1.111	-2.066	-0.070
96.0		-1.269	-0.878	-0.468	-1.145	-3.176
100.0		-0.278	-0.111	-0.187	-0.144	-0.011
2.5	(LOWER)	0.277	0.330	0.423	0.454	0.450
5.0		0.237	0.219	0.327	0.377	0.381
10.0		0.178	0.273	0.262	0.302	0.250
24.0		0.145	0.181	0.227	0.231	0.142
33.0		0.188	0.231	0.266	0.286	-0.082
54.0		0.344	0.395	0.441	0.380	0.687
73.5		0.567	0.631	0.644	0.842	0.250
84.0		0.565	0.618	-3.448	0.592	0.170
96.0		0.585	0.718	0.697	0.648	0.270

WING PRESSURE COEFFICIENTS

RUN 339 POINT 1 ALPHA 0.08 PSI 0.00 HEIGHT 20.00

X/C, %		BP 2	BP 6	BP 12	BP 16	BP 22
0.0	(UPPER)	-0.223	-1.042	-2.387	-3.288	-2.735
2.5		-0.754	-0.837	-1.500	-1.871	-2.280
5.0		-0.611	-0.870	-1.188	-1.415	-2.061
10.0		-0.592	-0.730	-0.885	-1.157	-1.744
15.0		-0.548	-0.682	-0.861	-1.018	-1.366
24.0		-0.556	-0.654	-0.784	-0.910	-0.899
33.0		-0.841	-0.854	-0.811	-0.885	-0.905
54.0		-0.986	-0.887	-1.013	3.470	-1.248
65.0		0.000	-1.440	-1.511	-1.884	-1.812
78.5		-0.007	-3.823	-4.582	-5.128	-5.408
79.5		-58.956	-43.888	-45.938	-54.123	-42.516
80.5		-8.788	-6.554	-7.258	-14.057	0.060
81.5		-2.823	1.388	-4.836	-6.764	-9.728
82.0		0.898	-2.871	0.658	-3.074	-5.905
84.0		-4.483	-3.507	-4.814	-3.957	-4.776
87.0		0.313	-3.267	-2.715	-2.800	-3.304
89.0		-0.671	-1.685	-3.498	-3.861	-2.078
93.0		-0.492	-0.788	-0.833	-2.550	-0.008
96.0		-0.850	-0.828	-0.012	-1.136	-4.147
100.0		-0.829	-0.879	-1.054	-0.805	-1.349
2.5	(LOWER)	0.388	0.474	0.493	0.474	0.403
5.0		0.381	0.352	0.418	0.458	0.372
10.0		0.317	0.420	0.391	0.391	0.264
24.0		0.274	0.307	0.316	0.260	0.117
33.0		0.295	0.308	0.298	0.287	-0.025
54.0		0.380	0.388	0.369	0.244	0.438
73.5		0.606	0.685	0.586	0.720	0.208
84.0		0.735	0.769	-4.278	0.502	0.205
96.0		0.584	0.552	0.496	0.412	0.019

RUN 339 POINT 2 ALPHA 0.00 PSI 0.00 HEIGHT 32.81

X/C, %		BP 2	BP 6	BP 12	BP 16	BP 22
0.0	(UPPER)	-0.103	-0.783	-1.854	-2.815	-3.706
2.5		-0.749	-1.088	-1.389	-1.733	-3.216
5.0		-0.650	-0.869	-1.169	-1.377	-1.769
10.0		-0.820	-0.767	-0.989	-1.168	-1.263
15.0		-0.589	-0.712	-0.904	-1.053	-1.095
24.0		-0.621	-0.720	-0.837	-0.987	-0.988
33.0		-0.806	-0.727	-0.896	-0.944	-0.985
54.0		-0.890	-1.012	-1.149	3.512	-1.376
65.0		-0.054	-1.848	-1.710	-1.854	-2.064
78.5		-0.058	-4.418	-5.119	-5.641	-6.122
79.5		-68.287	-50.539	-50.635	-59.827	-45.157
80.5		-7.598	-8.351	-7.255	-14.956	0.021
81.5		-3.645	1.391	-5.493	-7.356	-10.606
82.0		0.158	-3.589	0.350	-5.628	-6.825
84.0		-5.294	-4.204	-5.380	-4.431	-5.412
87.0		-0.246	-3.876	-3.160	-3.215	-3.877
89.0		-1.271	-2.188	-3.969	-4.411	-2.438
93.0		-1.082	-1.210	-1.187	-2.910	-0.065
96.0		-1.457	-1.185	-9.288	-1.412	-4.400
100.0		-0.722	-0.838	-0.890	-0.633	-1.151
2.5	(LOWER)	0.315	0.387	0.445	0.455	0.411
5.0		0.283	0.275	0.355	0.419	0.370
10.0		0.235	0.344	0.325	0.348	0.257
24.0		0.188	0.229	0.277	0.246	0.133
33.0		0.215	0.256	0.287	0.314	-0.080
54.0		0.321	0.398	0.451	0.344	0.446
73.5		0.567	0.655	0.601	0.734	0.153
84.0		0.678	0.677	-4.540	0.514	0.081
96.0		0.548	0.661	0.646	0.562	0.083

WING PRESSURE COEFFICIENTS

RUN 339 POINT 3 ALPHA -0.02 PSI 0.00 HEIGHT 85.08

X/C, %		BP 2	BP 6	BP 12	BP 16	BP 22
0.0	(UPPER)	0.031	-0.482	-1.405	-2.083	-2.987
2.5		-0.707	-0.872	-1.530	-1.512	-2.105
5.0		-0.620	-0.859	-1.077	-1.277	-1.520
10.0		-0.613	-0.730	-0.958	-1.118	-1.244
[illegible]		-0.615	-0.687	-0.893	-1.028	-1.081
[illegible]		-0.641	-0.743	-0.838	-0.957	-0.990
33.0		-0.828	-0.737	-0.903	-0.937	-0.994
54.0		-0.982	-1.041	-1.188	3.527	-1.381
65.0		-0.170	-1.712	-1.766	-1.900	-2.095
78.5		-0.171	-4.588	-5.258	-5.761	-6.090
79.5		-72.748	-52.881	-52.011	-60.683	-44.813
80.5		-7.636	-8.943	-7.193	-15.166	-0.100
81.5		-3.913	1.427	-5.676	-7.432	-10.396
82.0		-0.126	-3.811	0.238	-5.002	-6.430
84.0		-5.469	-4.379	-5.505	-4.538	-5.278
87.0		-0.445	-4.044	-3.293	-3.290	-3.611
89.0		-1.452	-2.328	-4.088	-4.500	-2.354
93.0		-1.232	-1.337	-1.278	-2.988	-0.174
96.0		-1.618	-1.282	-0.375	-1.475	-4.335
100.0		-0.836	-0.896	-0.794	-0.728	-1.188
2.5	(LOWER)	0.246	0.311	0.405	0.420	0.368
5.0		0.242	0.191	0.290	0.355	0.325
10.0		0.145	0.261	0.245	0.278	0.204
24.0		0.108	0.139	0.197	0.188	0.084
33.0		0.126	0.179	0.213	0.260	-0.198
54.0		0.258	0.337	0.387	0.311	0.477
73.5		0.525	0.611	0.596	0.788	0.179
84.0		0.538	0.585	-4.488	0.555	0.101
96.0		0.188	0.631	0.628	0.551	0.103

RUN 339 POINT 4 ALPHA -0.01 PSI 0.00 HEIGHT 87.01

X/C, %		BP 2	BP 6	BP 12	BP 16	BP 22
0.0	(UPPER)	0.097	-0.379	-1.228	-1.858	-2.781
2.5		-0.638	-0.888	-1.582	-1.417	-2.105
5.0		-0.576	-0.802	-1.013	-1.210	-1.437
10.0		-0.584	-0.704	-0.907	-1.063	-1.178
15.0		-0.574	-0.657	-0.847	-0.976	-1.038
24.0		-0.582	-0.700	-0.804	-0.908	-0.950
33.0		-0.578	-0.708	-0.868	-0.899	-0.983
54.0		-0.888	-1.001	-1.136	3.460	-1.332
65.0		-0.145	-1.863	-1.710	-1.845	-2.038
78.5		-0.145	-4.501	-5.146	-5.637	-5.958
79.5		-72.043	-52.321	-51.128	-60.221	-43.588
80.5		-7.278	-8.898	-6.886	-14.772	-0.071
81.5		-3.858	1.398	-5.523	-7.286	-10.119
82.0		-0.188	-3.733	0.227	-5.604	-6.264
84.0		-5.369	-4.264	-5.405	-4.412	-5.133
87.0		-0.461	-3.930	-3.187	-3.192	-3.488
89.0		-1.433	-2.268	-3.984	-4.372	-2.287
93.0		-1.208	-1.302	-1.237	-2.908	-0.151
96.0		-1.576	-1.253	-0.353	-1.428	-4.218
100.0		-0.776	-0.651	-0.754	-0.683	-1.148
2.5	(LOWER)	0.236	0.314	0.388	0.426	0.404
5.0		0.223	0.193	0.280	0.355	0.330
10.0		0.154	0.259	0.246	0.278	0.213
24.0		0.117	0.156	0.205	0.196	0.101
33.0		0.142	0.187	0.226	0.267	-0.171
54.0		0.267	0.352	0.403	0.310	0.500
73.5		0.528	0.619	0.608	0.782	0.201
84.0		0.541	0.584	-4.316	0.584	0.128
96.0		0.501	0.640	0.630	0.567	0.127

WING PRESSURE COEFFICIENTS

RUN 340 POINT 1 ALPHA 0.04 PSI 0.00 HEIGHT 19.53

X/C, %	BP 2	BP 6	BP 12	BP 16	BP 22
0.0 (UPPER)	-1.352	-2.784	-3.828	-3.290	-2.478
2.5	-1.115	-1.595	-2.563	-2.876	-2.156
5.0	-0.984	-1.384	-1.917	-2.085	-2.022
10.0	-0.882	-1.071	-1.380	-2.074	-1.891
15.0	-0.820	-0.943	-1.225	-1.530	-1.884
24.0	-0.811	-0.840	-1.080	-1.125	-1.430
33.0	-0.740	-0.904	-1.125	-1.036	-1.310
54.0	-2.093	-1.182	-1.285	5.781	-1.589
65.0	-0.233	-1.824	-1.876	-1.880	-2.102
78.5	-0.232	-4.963	-5.857	-6.087	-6.235
79.5	-95.039	-80.842	-88.907	-70.756	-71.386
80.5	-8.333	-8.881	-11.978	-22.700	-0.144
81.5	-3.788	1.713	-5.988	-8.133	-13.423
82.0	3.384	-3.379	3.173	-0.231	-8.770
84.0	-7.708	-5.215	-7.382	-4.547	-5.421
87.0	0.885	-5.391	-3.819	-3.148	-3.020
89.0	-1.225	-2.578	-5.324	-5.828	-0.780
93.0	-0.988	-1.195	-0.788	-3.587	-0.241
98.0	-1.328	-1.404	0.440	-1.221	-4.880
100.0	-3.344	-3.111	-2.928	-2.446	-2.422
2.5 (LOWER)	0.368	0.408	0.279	0.230	0.084
5.0	0.473	0.312	0.238	0.210	0.021
10.0	0.319	0.400	0.206	0.074	-0.140
24.0	0.175	0.111	-0.083	-0.239	-0.389
33.0	0.068	-0.048	-0.250	-0.249	-0.290
54.0	-0.385	-0.387	-0.317	-0.374	-0.083
73.5	-0.091	0.217	0.228	0.475	0.040
84.0	0.283	0.341	-4.701	0.293	0.048
98.0	-0.296	-0.183	-0.039	-0.008	-0.206

RUN 340 POINT 2 ALPHA -0.02 PSI 0.00 HEIGHT 32.81

X/C, %	BP 2	BP 6	BP 12	BP 16	BP 22
0.0 (UPPER)	-0.351	-1.187	-2.608	-3.508	-2.889
2.5	-0.906	-1.088	-1.670	-2.279	-2.406
5.0	-0.773	-1.086	-1.367	-1.619	-2.321
10.0	-0.737	-0.899	-1.137	-1.371	-2.148
15.0	-0.672	-0.789	-1.076	-1.235	-1.787
24.0	-0.732	-0.890	-0.998	-1.116	-1.258
33.0	-0.700	-0.858	-1.108	-1.080	-1.114
54.0	-2.175	-1.203	-1.318	5.845	-1.827
65.0	-0.117	-2.016	-1.990	-2.164	-2.351
78.5	-0.111	-5.358	-6.180	-8.791	-7.298
79.5	-99.095	-72.506	-70.938	-76.704	-75.910
80.5	-10.545	-9.284	-12.593	-23.887	0.068
81.5	-4.403	1.539	-6.802	-10.048	-15.648
82.0	3.039	-3.813	3.154	-0.958	-8.009
84.0	-8.414	-5.721	-8.126	-5.233	-6.534
87.0	0.444	-5.810	-4.110	-3.779	-3.955
89.0	-1.734	-2.875	-5.910	-6.318	-1.855
93.0	-1.498	-1.500	-1.120	-4.178	-0.112
98.0	-1.905	-1.881	0.183	-1.842	-5.906
100.0	-1.564	-1.895	-1.883	-1.740	-2.168
2.5 (LOWER)	0.254	0.341	0.394	0.372	0.283
5.0	0.287	0.224	0.277	0.349	0.280
10.0	0.188	0.301	0.285	0.277	0.171
24.0	0.127	0.148	0.206	0.178	0.042
33.0	0.115	0.175	0.182	0.270	-0.170
54.0	0.188	0.326	0.324	0.187	-0.158
73.5	0.542	0.858	0.564	0.428	0.070
84.0	0.804	0.849	-5.758	0.458	-0.033
98.0	0.484	0.506	0.478	0.367	-0.151

WING PRESSURE COEFFICIENTS

RUN 340 POINT 3 ALPHA 0.00 PSI 0.00 HEIGHT 85.00

X/C, %	BP 2	BP 6	BP 12	BP 16	BP 22
0.0 (UPPER)	-0.170	-0.774	-1.879	-2.020	-3.000
2.5	-0.884	-1.183	-1.718	-1.761	-2.885
5.0	-0.750	-1.020	-1.281	-1.477	-1.740
10.0	-0.718	-0.884	-1.058	-1.292	-1.441
15.0	-0.885	-0.771	-1.053	-1.187	-1.298
24.0	-0.748	-0.874	-1.002	-1.095	-1.188
33.0	-0.706	-0.883	-1.005	-1.076	-1.178
54.0	-2.051	-1.258	-1.355	5.806	-1.660
65.0	-0.271	-2.075	-2.059	-2.222	-2.425
78.5	-0.267	-5.388	-6.338	-8.920	-7.257
79.5	-100.867	-71.676	-70.299	-77.819	-73.071
80.5	-11.341	-9.718	-12.144	-23.200	-0.068
81.5	-4.735	1.540	-8.844	-10.098	-14.452
82.0	2.345	-4.282	2.817	-7.068	-7.850
84.0	-8.502	-5.931	-8.150	-5.284	-6.306
87.0	0.082	-5.963	-4.396	-3.802	-3.852
89.0	-2.031	-3.147	-5.876	-6.302	-1.887
93.0	-1.772	-1.882	-1.296	-4.231	-0.284
98.0	-2.106	-1.832	0.034	-1.738	-5.786
100.0	-1.860	-1.702	-1.857	-1.868	-2.144
2.5 (LOWER)	0.173	0.271	0.337	0.389	0.283
5.0	0.237	0.140	0.188	0.303	0.253
[illegible]	0.074	0.217	0.206	0.219	0.141
24.0	0.038	0.068	0.138	0.119	0.008
33.0	0.034	0.088	0.146	0.215	-0.355
54.0	0.140	0.270	0.316	0.188	-0.106
73.5	0.487	0.840	0.585	0.434	0.100
84.0	0.581	0.597	-5.875	0.483	-0.004
98.0	0.417	0.478	0.478	0.350	-0.119

RUN 340 POINT 4 ALPHA -0.02 PSI 0.00 HEIGHT 87.00

X/C, %	BP 2	BP 6	BP 12	BP 16	BP 22
0.0 (UPPER)	-0.171	-0.750	-1.821	-2.595	-3.005
2.5	-0.902	-1.201	-2.018	-1.823	-2.905
5.0	-0.815	-1.109	-1.320	-1.551	-1.833
10.0	-0.702	-0.940	-1.154	-1.282	-1.515
15.0	-0.781	-0.857	-1.137	-1.287	-1.390
24.0	-0.808	-0.940	-1.073	-1.107	-1.252
33.0	-0.771	-0.955	-1.198	-1.181	-1.290
54.0	-2.188	-1.352	-1.457	5.811	-1.783
65.0	-0.331	-2.184	-2.188	-2.358	-2.572
78.5	-0.338	-5.857	-6.848	-7.288	-7.804
79.5	-105.184	-74.738	-73.318	-81.050	-78.175
80.5	-11.780	-10.120	-12.808	-24.340	-0.121
81.5	-4.821	1.587	-7.103	-10.545	-15.082
82.0	2.479	-4.458	2.733	-7.451	-7.982
84.0	-8.908	-6.188	-8.581	-5.573	-6.581
87.0	0.122	-6.267	-4.450	-4.008	-4.028
89.0	-2.088	-3.312	-6.277	-6.672	-1.780
93.0	-1.829	-1.801	-1.377	-4.687	-0.347
98.0	-2.222	-1.961	0.004	-1.857	-6.030
100.0	-1.825	-1.850	-2.001	-1.820	-2.281
2.5 (LOWER)	0.092	0.204	0.295	0.336	0.240
5.0	0.171	0.085	0.111	0.250	0.216
10.0	0.008	0.150	0.160	0.157	0.068
24.0	-0.023	0.002	0.101	0.071	-0.048
33.0	-0.032	0.028	0.082	0.153	-0.415
54.0	0.074	0.238	0.271	0.147	-0.143
73.5	0.450	0.805	0.551	0.433	0.067
84.0	0.523	0.582	-5.944	0.457	-0.044
98.0	0.357	0.447	0.445	0.368	-0.182

WING PRESSURE COEFFICIENTS

RUN 341 POINT 1 ALPHA 0.00 PSI 0.00 HEIGHT 19.35

X/C, %		BP 2	BP 6	BP 12	BP 16	BP 22
0.0	(UPPER)	-2.451	-2.101	-1.824	-1.341	-0.714
2.5		-2.012	-1.802	-1.885	-1.667	-1.218
5.0		-1.812	-1.644	-1.780	-1.530	-1.343
10.0		-1.656	-1.686	-1.410	-1.463	-1.352
15.0		-1.487	-1.432	-1.485	-1.433	-1.374
24.0		-1.458	-1.433	-1.410	-1.341	-1.327
33.0		-1.153	-1.349	-1.500	-1.216	-1.338
54.0		-3.282	-1.473	-1.424	8.926	-1.801
65.0		-0.524	-1.884	-1.963	-2.219	-2.367
78.5		-0.471	-6.024	-5.249	-6.608	-7.438
79.5		-184.024	-106.176	-92.258	-92.258	-128.213
80.5		-8.333	-11.704	-16.184	-37.818	-0.351
81.5		-1.781	1.952	-5.053	-12.244	-20.033
82.0		11.385	-1.186	16.304	-7.137	-7.717
84.0		-11.639	-6.235	-10.747	-4.814	-8.227
87.0		3.380	-8.047	-3.864	-2.025	-2.306
89.0		-0.912	-3.185	-7.626	-8.636	1.918
93.0		-1.324	-1.314	-0.057	-5.020	-0.526
96.0		-2.214	-2.161	1.658	-0.968	-6.162
100.0		-5.531	-5.542	-5.810	-4.833	-4.190
2.5	(LOWER)	-1.190	-1.173	-1.285	-1.256	-1.441
5.0		-0.724	-1.196	-1.300	-1.248	-1.336
10.0		-1.029	-1.100	-1.232	-1.357	-1.298
24.0		-1.251	-1.322	-1.384	-1.450	-1.274
33.0		-1.412	-1.380	-1.502	-1.318	-0.885
54.0		-1.702	-1.476	-1.473	-1.404	-1.490
73.5		-1.481	-1.249	-1.057	-0.332	-0.171
84.0		-1.351	-1.298	-5.444	-0.618	-0.055
96.0		-1.824	-1.814	-1.330	-0.991	-0.513

RUN 341 POINT 2 ALPHA -0.05 PSI 0.00 HEIGHT 32.78

X/C, %		BP 2	BP 6	BP 12	BP 16	BP 22
0.0	(UPPER)	-1.798	-3.250	-4.874	-4.248	-3.184
2.5		-1.784	-2.082	-3.867	-3.802	-2.787
5.0		-1.478	-1.873	-2.827	-3.818	-2.788
10.0		-1.324	-1.858	-1.880	-3.107	-2.855
15.0		-1.205	-1.305	-1.755	-2.172	-2.638
24.0		-1.303	-1.478	-1.837	-1.557	-2.432
33.0		-1.134	-1.418	-1.884	-1.533	-2.244
54.0		-3.905	-1.812	-1.834	11.112	-2.608
65.0		-0.545	-3.083	-2.880	-3.048	-3.374
78.5		-0.490	-7.805	-8.731	-9.493	-9.978
79.5		-198.307	-140.881	-124.932	-123.524	-148.870
80.5		-15.073	-15.533	-22.804	-45.978	-0.218
81.5		-5.836	1.787	-8.033	-18.444	-25.387
82.0		9.948	-4.435	9.832	-10.036	-11.295
84.0		-15.848	-9.484	-14.423	-7.227	-9.385
87.0		2.556	-10.872	-8.212	-4.936	-4.348
89.0		-2.800	-4.845	-10.479	-10.802	0.321
93.0		-2.544	-2.171	-1.012	-7.020	-0.584
96.0		-3.275	-2.858	1.350	-2.959	-0.128
100.0		-5.288	-5.317	-5.321	-4.748	-4.808
2.5	(LOWER)	-0.005	0.000	0.019	0.088	-0.186
5.0		0.296	-0.075	-0.093	0.055	-0.104
10.0		-0.080	0.081	-0.010	-0.101	-0.241
24.0		-0.178	-0.202	-0.183	-0.232	-0.483
33.0		-0.301	-0.268	-0.328	-0.131	-0.737
54.0		-0.539	-0.233	-0.215	-0.432	-1.885
73.5		0.018	0.330	0.294	-0.862	-0.244
84.0		0.152	0.288	-0.606	0.157	-0.291
96.0		-0.255	-0.266	-0.177	-0.226	-0.744

WING PRESSURE COEFFICIENTS

RUN 341 POINT 3 ALPHA 0.00 PSI 0.00 HEIGHT 86.81

X/C, %		BP 2	BP 6	BP 12	BP 16	BP 22
0.0	(UPPER)	-0.846	-1.248	-2.813	-3.314	-4.422
2.5		-1.232	-1.842	-2.636	-2.815	-3.805
5.0		-1.084	-1.518	-1.750	-2.904	-2.420
10.0		-1.047	-1.316	-1.474	-1.747	-1.887
15.0		-1.058	-1.028	-1.538	-1.805	-1.802
24.0		-1.078	-1.297	-1.425	-1.438	-1.800
33.0		-0.970	-1.251	-1.827	-1.456	-1.823
54.0		-3.495	-1.786	-1.782	10.040	-2.288
65.0		-0.583	-2.002	-2.795	-2.955	-3.219
78.5		-0.548	-7.518	-8.406	-9.336	-9.024
79.5		-184.988	-130.531	-117.281	-118.017	-138.282
80.5		-15.151	-14.618	-21.352	-42.554	-0.228
81.5		-5.832	1.800	-8.936	-15.580	-23.457
82.0		8.581	-4.067	8.829	-9.907	-10.188
84.0		-14.853	-9.121	-13.861	-7.042	-8.530
87.0		1.832	-10.304	-6.082	-5.026	-4.318
89.0		-2.683	-4.735	-9.994	-10.356	-0.008
93.0		-2.509	-2.208	-1.216	-6.803	-0.747
96.0		-3.206	-2.871	1.061	-2.183	-8.020
100.0		-3.681	-3.853	-4.217	-3.885	-4.263
2.5	(LOWER)	-0.063	0.040	0.087	0.185	-0.050
5.0		0.081	-0.152	-0.158	0.171	0.006
10.0		-0.271	-0.024	-0.029	-0.058	-0.100
24.0		-0.230	-0.235	-0.080	-0.090	-0.243
33.0		-0.288	-0.183	-0.143	0.048	-0.755
54.0		-0.287	0.008	0.036	-0.158	-1.860
73.5		0.290	0.500	0.381	-0.048	-0.147
84.0		0.354	0.417	-0.021	0.250	-0.338
96.0		0.118	0.120	0.111	0.028	-0.003

RUN 341 POINT 4 ALPHA -0.01 PSI 0.00 HEIGHT 88.98

X/C, %		BP 2	BP 6	BP 12	BP 16	BP 22
0.0	(UPPER)	-0.583	-1.212	-2.406	-3.170	-4.378
2.5		-1.243	-1.832	-2.837	-2.518	-3.882
5.0		-1.130	-1.552	-1.758	-2.045	-2.407
10.0		-1.118	-1.349	-1.482	-1.782	-1.948
15.0		-1.073	-1.081	-1.008	-1.085	-1.885
24.0		-1.081	-1.404	-1.482	-1.474	-1.880
33.0		-1.043	-1.298	-1.707	-1.541	-1.883
54.0		-3.491	-1.851	-1.808	9.830	-2.254
65.0		-0.643	-2.881	-2.822	-3.042	-3.314
78.5		-0.612	-7.877	-8.040	-9.322	-9.813
79.5		-181.344	-130.304	-117.374	-120.300	-138.357
80.5		-15.612	-14.701	-21.578	-42.743	-0.318
81.5		-5.872	1.569	-8.231	-15.794	-23.571
82.0		8.458	-4.803	8.561	-10.051	-10.433
84.0		-15.080	-9.272	-13.794	-7.183	-8.584
87.0		1.943	-10.410	-6.187	-5.183	-4.353
89.0		-2.788	-4.853	-10.142	-10.488	-0.062
93.0		-2.054	-2.361	-1.298	-6.912	-0.675
96.0		-3.383	-2.874	0.871	-2.230	-8.750
100.0		-3.779	-4.026	-4.297	-3.900	-4.327
2.5	(LOWER)	-0.136	-0.053	0.043	0.148	-0.098
5.0		0.040	-0.229	-0.233	0.051	-0.022
10.0		-0.322	-0.085	-0.051	-0.117	-0.144
24.0		-0.281	-0.367	-0.140	-0.138	-0.298
33.0		-0.341	-0.205	-0.208	-0.022	-0.814
54.0		-0.321	-0.048	0.024	-0.185	-1.883
73.5		0.233	0.484	0.350	-0.088	-0.181
84.0		0.303	0.365	-0.038	0.224	-0.348
96.0		0.064	0.080	0.067	-0.021	-0.818

WING PRESSURE COEFFICIENTS

RUN 342 POINT 1 ALPHA 0.02 PSI 0.00 HEIGHT 86.50

X/C, %		DP 2	DP 6	DP 12	DP 16	DP 22
0.0	(UPPER)	-1.225	-1.818	-2.830	-3.110	-4.201
2.5		-1.881	-2.015	-3.517	-3.574	-4.133
5.0		-1.533	-2.248	-2.294	-2.426	-2.940
10.0		-1.417	-1.704	-1.885	-2.132	-2.212
15.0		-1.400	-1.230	-2.180	-2.012	-2.448
24.0		-1.271	-1.875	-2.010	-1.822	-2.000
33.0		-1.256	-1.764	-2.442	-1.792	-2.015
54.0		-0.970	-2.461	-2.183	10.030	-3.041
65.0		-1.060	-3.813	-3.402	-3.863	-4.068
78.5		-0.953	-8.525	-10.055	-11.906	-12.188
79.5		-401.986	-208.468	-227.087	-182.838	-274.362
80.5		-26.811	-33.730	-34.448	-81.405	-0.588
81.5		-5.583	6.054	-10.275	-24.950	-30.059
82.0		22.517	-4.241	21.500	-13.600	-14.101
84.0		-26.433	-14.248	-23.261	-8.443	-11.726
87.0		8.079	-17.530	-8.500	-5.811	-4.645
89.0		-3.186	-7.887	-18.571	-16.877	4.342
93.0		-3.786	-2.751	-0.375	-10.800	-1.141
96.0		-5.423	-4.305	3.148	-2.187	-13.068
100.0		-7.757	-8.382	-8.798	-8.008	-8.015
2.5	(LOWER)	-0.722	-0.510	-0.480	-0.175	-0.801
5.0		-0.070	-0.850	-0.952	-0.382	-0.496
10.0		-1.014	-0.807	-0.474	-0.843	-0.558
24.0		-0.749	-0.882	-0.581	-0.508	-0.714
33.0		-1.002	-0.835	-0.752	-0.312	-1.494
54.0		-1.141	-0.498	-0.498	-0.839	-0.835
73.5		-0.188	0.204	-0.001	-3.333	-0.458
84.0		-0.115	-0.174	-11.478	-0.372	-0.892
98.0		-0.525	-0.705	-0.714	-0.761	-1.381

RUN 342 POINT 2 ALPHA -0.01 PSI 0.00 HEIGHT 10.20

X/C, %		DP 2	DP 6	DP 12	DP 16	DP 22
0.0	(UPPER)	-1.708	-1.581	-1.831	-1.579	-1.884
2.5		-1.378	-1.183	-1.863	-1.186	-0.854
5.0		-1.186	-1.450	-1.226	-1.001	-1.172
10.0		-1.052	-1.263	-0.880	-0.894	-0.993
15.0		-0.845	-0.714	-1.263	-0.994	-1.382
24.0		-1.004	-1.277	-1.214	-0.785	-1.158
33.0		-0.725	-1.060	-1.610	-0.878	-1.203
54.0		-4.822	-1.473	-1.102	10.902	-1.843
65.0		-0.742	-1.875	-1.888	-2.132	-2.509
78.5		-0.833	-4.572	-5.811	-7.173	-8.009
79.5		-332.849	-227.846	-188.089	-150.701	-244.414
80.5		-21.086	-25.294	-27.321	-88.740	-0.331
81.5		-0.786	0.408	-5.108	-19.118	-33.875
82.0		24.203	0.282	22.405	-9.866	-10.871
84.0		-21.040	-10.021	-18.287	-5.751	-8.882
87.0		7.544	-14.000	-5.561	-2.748	-1.535
89.0		-0.954	-5.067	-12.846	-12.843	8.340
93.0		-2.328	-1.784	0.857	-7.750	-0.913
96.0		-4.129	-3.585	3.549	-0.470	-8.941
100.0		-10.280	-8.436	-8.925	-8.830	-7.417
2.5	(LOWER)	-1.840	-1.868	-1.884	-2.078	-2.980
5.0		-0.813	-1.788	-2.166	-2.068	-2.498
10.0		-1.584	-1.838	-1.768	-2.182	-2.270
24.0		-1.521	-1.930	-1.868	-1.879	-1.978
33.0		-1.893	-2.066	-2.038	-1.864	-1.089
54.0		-2.402	-1.843	-1.938	-2.130	-6.197
73.5		-1.889	-1.848	-1.829	-3.402	-1.058
84.0		-1.992	-1.983	-7.289	-1.544	-1.220
98.0		-2.716	-2.622	-2.328	-1.951	-1.760

WING PRESSURE COEFFICIENTS

RUN 342 POINT 3 ALPHA -0.02 PSI 0.00 HEIGHT 32.00

X/C, %		DP 2	DP 6	DP 12	DP 16	DP 22
0.0	(UPPER)	-4.003	-4.061	-3.712	-3.118	-3.475
2.5		-2.025	-4.194	-3.848	-3.318	-3.320
5.0		-2.185	-4.333	-3.901	-3.100	-3.182
10.0		-1.023	-2.238	-3.017	-2.884	-2.888
15.0		-1.740	-1.534	-3.177	-2.731	-2.888
24.0		-1.880	-2.115	-2.408	-2.200	-2.384
33.0		-1.432	-1.871	-2.908	-2.244	-2.318
54.0		-3.548	-2.423	-2.061	17.967	-3.168
65.0		-1.027	-3.838	-3.148	-3.523	-4.043
78.5		-0.888	-8.750	-9.738	-10.384	-12.043
79.5		-308.021	-205.021	-223.536	-177.612	-275.271
80.5		-26.756	-32.317	-32.342	-80.750	-0.830
81.5		-4.143	0.241	-8.307	-23.633	-40.372
82.0		24.027	-3.150	22.025	-13.002	-15.013
84.0		-24.081	-13.512	-22.229	-8.508	-12.300
87.0		7.106	-16.906	-7.878	-5.087	-3.032
89.0		-1.842	-8.530	-15.747	-15.901	4.672
93.0		-2.831	-2.393	0.077	-9.904	-1.182
96.0		-4.458	-4.143	3.464	-1.072	-12.408
100.0		-10.954	-10.006	-10.542	-9.189	-8.254
2.5	(LOWER)	-0.442	-0.666	-0.588	-0.592	-0.812
5.0		0.229	-0.844	-1.149	-0.836	-0.788
10.0		-0.886	-0.807	-0.801	-0.985	-0.951
24.0		-0.830	-1.138	-1.032	-0.987	-1.200
33.0		-1.302	-1.307	-1.254	-0.897	-1.512
54.0		-1.997	-1.300	-1.188	-1.334	-7.120
73.5		-0.895	-0.451	-0.527	-4.043	-0.500
84.0		-0.787	-2.845	-10.582	-0.846	-0.820
98.0		-1.520	-1.753	-1.383	-1.100	-1.520

RUN 342 POINT 4 ALPHA -0.01 PSI 0.00 HEIGHT 65.00

X/C, %		DP 2	DP 6	DP 12	DP 16	DP 22
0.0	(UPPER)	-1.273	-1.003	-3.140	-3.404	-4.382
2.5		-1.063	-2.121	-3.400	-3.581	-3.942
5.0		-1.426	-2.023	-2.243	-2.309	-3.248
10.0		-1.294	-1.753	-1.806	-2.634	-2.190
15.0		-1.214	-1.288	-2.004	-1.904	-2.258
24.0		-1.251	-1.000	-1.881	-1.550	-1.906
33.0		-1.188	-1.616	-2.233	-1.081	-1.876
54.0		-5.080	-2.248	-2.107	10.318	-2.799
65.0		-0.906	-3.586	-3.213	-3.440	-3.899
78.5		-0.837	-8.985	-10.050	-11.240	-11.828
79.5		-300.638	-248.950	-213.127	-172.003	-253.000
80.5		-24.280	-31.167	-32.305	-75.023	-0.504
81.5		-5.488	0.124	-8.843	-23.334	-37.506
82.0		20.512	-4.062	10.513	-13.475	-13.000
84.0		-24.422	-13.327	-21.240	-8.837	-11.448
87.0		5.301	-16.458	-7.846	-5.020	-4.138
89.0		-3.040	-8.804	-15.331	-15.716	3.883
93.0		-3.488	-2.836	-0.457	-9.885	-1.152
96.0		-5.003	-4.118	2.825	-1.831	-12.281
100.0		-7.018	-7.595	-8.053	-7.490	-7.410
2.5	(LOWER)	-0.582	-0.519	-0.277	-0.078	-0.553
5.0		0.028	-0.875	-0.782	-0.234	-0.358
10.0		-0.774	-0.478	-0.434	-0.532	-0.458
24.0		-0.503	-0.740	-0.462	-0.390	-0.634
33.0		-0.866	-0.885	-0.585	-0.238	-1.354
54.0		-0.800	-0.378	-0.367	-0.883	-6.530
73.5		0.055	0.320	0.041	-3.673	-0.373
84.0		-0.958	-2.780	-10.027	-0.277	-0.814
98.0		-0.376	-0.572	-0.612	-0.863	-1.278

WING PRESSURE COEFFICIENTS

RUN 342 POINT 5 ALPHA -0.02 PSI 0.00 HEIGHT 87.01

X/C, %		BP 2	BP 8	BP 12	BP 16	BP 22
0.0	(UPPER)	-1.014	-1.301	-2.341	-[illegible].004	-3.813
2.5		-1.302	-1.675	-3.065	-3.102	-3.616
5.0		-1.214	-1.008	-2.016	-2.004	-2.495
10.0		-1.218	-1.048	-1.534	-1.782	-1.804
15.0		-1.190	-1.118	-1.756	-1.868	-2.156
24.0		-1.175	-1.470	-1.677	-1.370	-1.887
33.0		-1.068	-1.900	-2.050	-1.495	-1.607
54.0		-4.754	-2.031	-1.882	15.040	-2.067
65.0		-0.822	-3.205	-2.026	-3.176	-3.533
78.5		-0.726	-8.336	-9.300	-10.474	-10.788
79.5		-341.116	-228.624	-198.406	-158.727	-235.519
80.5		-22.078	-28.454	-29.177	-70.672	-0.573
81.5		-5.200	0.454	-9.034	-21.784	-34.468
82.0		18.843	-3.775	16.222	-12.379	-12.782
84.0		-22.299	-12.454	-19.928	-8.107	-10.940
87.0		4.931	-15.348	-7.232	-5.177	-3.818
89.0		-2.804	-6.000	-14.208	-14.507	3.431
93.0		-3.134	-2.356	-0.373	-9.116	-0.967
96.0		-4.580	-3.700	2.830	-1.771	-11.382
100.0		-8.515	-7.027	-7.444	-8.830	-8.800
2.5	(LOWER)	-0.395	-0.334	-0.172	-0.036	-0.444
5.0		-0.004	-0.848	-0.500	-0.170	-0.345
10.0		-0.803	-0.470	-0.377	-0.458	-0.396
24.0		-0.537	-0.867	-0.400	-0.298	-0.543
33.0		-0.835	-0.844	-0.530	-0.161	-1.295
54.0		-0.833	-0.354	-0.291	-0.550	-0.024
73.5		0.036	0.380	0.128	-3.274	-0.292
84.0		0.025	-2.855	-0.805	-0.154	-0.883
96.0		-0.332	-0.472	-0.535	-0.510	-1.102

RUN 343 POINT 1 ALPHA 0.05 PSI 0.00 HEIGHT 57.24

X/C, %		BP 2	BP 8	BP 12	BP 16	BP 22
0.0	(UPPER)	-6.243	-6.707	-5.300	-4.102	-4.173
2.5		-3.981	-6.280	-5.712	-4.753	-4.140
5.0		-2.700	-7.900	-5.412	-4.770	-4.442
10.0		-2.484	-2.230	-5.812	-4.798	-4.042
15.0		-2.023	-1.799	-6.201	-5.153	-4.500
24.0		-2.067	-2.545	-3.043	-4.011	-4.185
33.0		-1.766	-2.320	-2.522	-4.136	-4.388
54.0		-8.772	-2.942	-2.475	16.050	-5.020
65.0		-1.004	-4.433	-3.807	-3.432	-7.763
78.5		-0.985	-10.080	-11.830	-12.354	-13.800
79.5		-443.543	-295.595	-254.278	-201.926	-300.420
80.5		-28.200	-38.737	-37.007	-90.571	-0.488
81.5		-5.271	-0.482	-11.618	-27.394	-47.012
82.0		24.056	-4.838	23.000	-15.273	-18.816
84.0		-29.124	-18.258	-25.371	-10.402	-15.930
87.0		8.484	-19.806	-9.057	-6.670	-5.371
89.0		-3.534	-8.024	-18.521	-18.778	4.025
93.0		-4.878	-3.278	-0.678	-11.948	-1.211
96.0		-5.933	-5.034	3.206	-2.588	-17.030
100.0		-8.881	-8.470	-8.941	-8.231	-8.981
2.5	(LOWER)	-0.555	-0.828	-0.582	-0.383	-1.284
5.0		0.105	-0.720	-0.851	-0.359	-0.587
10.0		-0.788	-0.553	-0.405	-0.673	-0.829
24.0		-0.700	-0.907	-0.500	-0.483	-0.871
33.0		-1.188	-0.886	-0.836	-0.410	-1.885
54.0		-1.303	-0.810	-0.847	-0.981	-0.414
73.5		-0.182	0.142	-0.088	-4.739	-0.894
84.0		-0.273	-4.028	-14.778	-0.512	-1.317
96.0		-0.835	-0.870	-0.943	-0.901	-1.026

WING PRESSURE COEFFICIENTS

RUN 343 POINT 2 ALPHA 0.04 PSI 0.00 HEIGHT 85.00

X/C, %		BP 2	BP 8	BP 12	BP 16	BP 22
0.0	(UPPER)	-5.233	-5.870	-4.583	-3.880	-3.610
2.5		-3.237	-5.980	-5.027	-4.235	-3.810
5.0		-2.352	-6.870	-4.830	-4.206	-3.920
10.0		-1.983	-1.878	-5.333	-4.314	-3.800
15.0		-1.880	-1.814	-5.480	-4.800	-4.061
24.0		-1.051	-2.123	-2.231	-4.442	-3.748
33.0		-1.507	-1.830	-2.052	-3.487	-3.933
54.0		-5.828	-2.526	-2.071	15.052	-5.410
65.0		-0.806	-3.873	-3.306	-3.012	-6.944
78.5		-0.821	-8.821	-10.524	-11.078	-11.820
79.5		-371.598	-250.478	-216.751	-174.296	-253.290
80.5		-23.033	-31.804	-32.980	-76.500	-0.518
81.5		-5.024	-0.174	-10.484	-23.050	-40.472
82.0		19.828	-4.474	18.921	-13.008	-18.105
84.0		-24.004	-13.948	-21.737	-8.333	-14.302
87.0		5.200	-17.018	-8.306	-6.042	-5.774
89.0		-3.247	-7.025	-15.908	-16.041	2.316
93.0		-4.133	-2.088	-0.845	-10.257	-1.002
96.0		-5.910	-4.482	2.504	-2.445	-19.205
100.0		-8.878	-7.447	-7.872	-7.490	-7.425
2.5	(LOWER)	-0.307	-0.383	-0.328	-0.204	-0.900
5.0		0.200	-0.501	-0.500	-0.140	-0.387
10.0		-0.584	-0.268	-0.140	-0.304	-0.387
24.0		-0.395	-0.584	-0.272	-0.187	-0.582
33.0		-0.754	-0.554	-0.486	-0.008	-1.278
54.0		-0.819	-0.350	-0.295	-0.584	-0.022
73.5		0.003	0.336	0.009	-3.860	-0.587
84.0		-0.043	-3.243	-13.371	-0.257	-1.070
96.0		-0.334	-0.511	-0.624	-0.537	-1.527

RUN 343 POINT 3 ALPHA 0.03 PSI 0.00 HEIGHT 87.00

X/C, %		BP 2	BP 8	BP 12	BP 16	BP 22
0.0	(UPPER)	-4.220	-5.208	-4.205	-3.452	-3.375
2.5		-2.718	-4.908	-4.583	-3.875	-3.305
5.0		-2.146	-5.229	-4.550	-4.050	-3.834
10.0		-1.795	-1.800	-4.737	-4.025	-3.229
15.0		-1.871	-1.511	-4.487	-4.136	-3.708
24.0		-1.526	-1.808	-1.968	-3.715	-3.388
33.0		-1.372	-1.800	-1.807	-2.866	-3.534
54.0		-5.129	-2.378	-1.825	14.050	-4.562
65.0		-0.790	-3.825	-3.147	-2.906	-5.915
78.5		-0.721	-9.600	-9.883	-10.766	-11.471
79.5		-342.754	-231.150	-200.775	-163.232	-235.382
80.5		-21.744	-26.983	-30.515	-71.150	-0.534
81.5		-5.610	-0.167	-9.040	-22.082	-37.532
82.0		18.352	-4.497	17.956	-13.041	-16.440
84.0		-23.171	-12.906	-20.222	-8.123	-13.150
87.0		4.816	-15.758	-7.942	-5.042	-4.001
89.0		-3.001	-6.500	-14.829	-15.102	2.486
93.0		-3.777	-2.713	-0.782	-9.042	-0.940
96.0		-5.420	-4.126	2.291	-2.311	-13.514
100.0		-8.085	-8.000	-7.355	-8.050	-8.952
2.5	(LOWER)	-0.175	-0.258	-0.185	-0.077	-0.842
5.0		0.412	-0.472	-0.528	-0.070	-0.272
10.0		-0.522	-0.287	-0.156	-0.344	-0.278
24.0		-0.354	-0.484	-0.234	-0.144	-0.498
33.0		-0.843	-0.408	-0.410	-0.012	-1.279
54.0		-0.788	-0.206	-0.300	-0.528	-0.311
73.5		0.061	0.374	0.147	-3.173	-0.535
84.0		0.010	-2.835	-11.840	-0.185	-0.900
96.0		-0.255	-0.412	-0.491	-0.519	-1.367

WING PRESSURE COEFFICIENTS

RUN 344 POINT 1 ALPHA 8.06 PSI 0.00 HEIGHT 48.20

X/C, %		BP 2	BP 6	BP 12	BP 16	BP 22
0.0	(UPPER)	-4.901	-5.457	-4.226	-3.153	-3.103
2.5		-2.728	-5.318	-4.538	-3.527	-3.107
5.0		-1.924	-6.221	-4.372	-3.812	-3.315
10.0		-1.805	-1.335	-4.762	-3.755	-3.076
15.0		-1.420	-1.294	-4.986	-4.176	-3.377
24.0		-1.261	-1.834	-1.727	-3.875	-3.215
33.0		-1.135	-1.372	-1.481	-3.180	-3.431
54.0		-2.547	-1.814	-1.561	8.507	-4.013
65.0		-0.386	-2.819	-2.478	-2.176	-6.333
78.5		-0.220	-7.302	-8.066	-8.371	-9.386
79.5		-107.765	-141.493	-127.329	-108.681	-130.130
80.5		-13.987	-18.433	-20.841	-44.002	-0.268
81.5		-5.381	0.105	-8.433	-15.503	-25.950
82.0		8.503	-4.880	8.422	-9.005	-14.056
84.0		-14.430	-9.006	-13.523	-7.055	-11.559
87.0		1.959	-10.243	-6.055	-4.843	-8.005
88.0		-2.562	-4.880	-9.830	-10.142	-1.457
93.0		-2.846	-2.284	-1.321	-6.704	-0.447
96.0		-3.788	-2.080	0.748	-2.298	-10.015
100.0		-3.346	-3.782	-4.114	-3.844	-3.786
2.5	(LOWER)	0.181	0.038	-0.003	0.081	-0.322
5.0		0.800	0.053	-0.047	0.203	0.002
10.0		0.058	0.135	0.237	0.000	0.044
24.0		0.000	-0.020	0.105	0.201	-0.147
33.0		-0.118	0.003	0.015	0.181	-0.059
54.0		-0.225	0.152	0.182	-0.036	-3.292
73.5		0.400	0.500	0.488	-1.418	-0.217
84.0		0.378	-1.263	-0.733	0.206	-0.450
96.0		0.135	0.107	0.031	-0.032	-0.047

RUN 344 POINT 2 ALPHA 8.03 PSI 0.00 HEIGHT 65.60

X/C, %		BP 2	BP 6	BP 12	BP 16	BP 22
0.0	(UPPER)	-4.149	-5.283	-4.068	-3.323	-3.000
2.5		-2.442	-5.044	-4.386	-3.685	-3.001
5.0		-1.867	-5.183	-4.245	-3.747	-3.209
10.0		-1.588	-1.513	-4.315	-3.800	-3.045
15.0		-1.425	-1.333	-4.241	-4.044	-3.377
24.0		-1.276	-1.563	-1.716	-3.705	-3.158
33.0		-1.142	-1.416	-1.503	-2.740	-3.323
54.0		-2.591	-1.876	-1.887	8.484	-4.361
65.0		-0.487	-2.914	-2.815	-2.435	-5.706
78.5		-0.414	-7.479	-8.290	-8.772	-9.706
79.5		-108.877	-141.522	-127.948	-111.582	-141.282
80.5		-13.821	-18.390	-21.100	-44.311	-0.388
81.5		-5.536	0.171	-8.711	-15.708	-28.287
82.0		8.418	-4.836	8.410	-10.181	-14.125
84.0		-14.724	-9.100	-13.820	-7.244	-11.858
87.0		1.804	-10.382	-6.158	-4.971	-8.280
88.0		-2.596	-4.800	-9.988	-10.320	-1.766
93.0		-2.810	-2.388	-1.408	-6.786	-0.585
96.0		-3.739	-3.098	0.687	-2.350	-10.860
100.0		-3.342	-3.738	-4.106	-3.878	-4.048
2.5	(LOWER)	0.228	0.078	0.102	0.131	-0.281
5.0		0.487	-0.014	-0.061	0.207	0.006
10.0		-0.082	0.115	0.105	0.051	0.034
24.0		0.018	-0.086	0.093	0.156	-0.157
33.0		-0.105	-0.054	-0.033	0.203	-0.753
54.0		-0.210	0.126	0.123	-0.014	-3.298
73.5		0.419	0.507	0.456	-1.431	-0.248
84.0		0.382	-1.281	-10.297	0.210	-0.526
96.0		0.105	0.100	0.015	-0.018	-0.741

WING PRESSURE COEFFICIENTS

RUN 344 POINT 3 ALPHA 8.02 PSI 0.00 HEIGHT 87.03

X/C, %		BP 2	BP 6	BP 12	BP 16	BP 22
0.0	(UPPER)	-3.737	-5.004	-4.060	-3.323	-3.024
2.5		-2.240	-4.917	-4.218	-3.056	-3.042
5.0		-1.813	-4.170	-4.005	-3.083	-3.227
10.0		-1.507	-1.610	-3.974	-3.740	-2.986
15.0		-1.308	-1.373	-3.715	-3.818	-3.271
24.0		-1.218	-1.041	-1.758	-3.290	-3.042
33.0		-1.132	-1.425	-1.814	-2.413	-3.149
54.0		-2.400	-1.838	-1.002	8.171	-3.833
65.0		-0.482	-2.880	-2.904	-2.536	-5.086
78.5		-0.434	-7.354	-8.105	-8.710	-8.625
79.5		-108.000	-138.187	-123.297	-108.303	-130.907
80.5		-12.583	-17.806	-20.409	-42.081	-0.337
81.5		-5.501	0.105	-8.612	-15.246	-25.453
82.0		7.812	-4.784	7.905	-8.047	-13.623
84.0		-14.008	-9.041	-13.205	-7.066	-11.287
87.0		1.500	-9.050	-5.964	-4.080	-5.990
88.0		-2.607	-4.710	-9.885	-10.013	-1.878
93.0		-2.754	-2.307	-1.202	-6.611	-0.500
96.0		-3.678	-2.035	0.633	-2.323	-10.347
100.0		-3.290	-3.848	-3.980	-3.771	-3.874
2.5	(LOWER)	0.185	0.058	0.080	0.158	-0.235
5.0		0.452	-0.044	-0.066	0.183	0.030
10.0		-0.077	0.092	0.150	0.036	0.027
24.0		-0.014	-0.115	0.075	0.137	-0.198
33.0		-0.200	-0.060	-0.007	0.156	-0.746
54.0		-0.228	0.127	0.120	-0.050	-2.108
73.5		0.375	0.566	0.434	-1.310	-0.248
84.0		0.352	-1.183	-0.721	0.213	-0.526
96.0		0.080	0.102	-0.003	-0.020	-0.727

RUN 345 POINT 1 ALPHA -0.01 PSI 0.00 HEIGHT 10.40

X/C, %		BP 2	BP 6	BP 12	BP 16	BP 22
0.0	(UPPER)	-3.038	-2.295	-2.101	-1.256	-0.818
2.5		-2.250	-2.023	-2.181	-1.080	-1.487
5.0		-1.867	-2.102	-1.823	-1.707	-1.590
10.0		-1.086	-1.833	-1.490	-1.497	-1.205
15.0		-1.429	-1.383	-1.054	-1.375	-1.523
24.0		-1.226	-1.450	-1.482	-1.134	-1.271
33.0		-1.022	-1.283	-1.001	-1.231	-1.304
54.0		-2.588	-1.438	-1.342	7.071	-1.778
65.0		-0.398	-1.982	-1.902	-2.184	-2.472
78.5		-0.315	-4.300	-5.254	-6.086	-7.395
79.5		-100.005	-118.120	-104.286	-90.842	-131.618
80.5		-10.953	-14.985	-18.141	-30.311	-0.296
81.5		-2.307	0.001	-5.121	-12.336	-20.230
82.0		10.801	-1.700	9.860	-7.482	-8.231
84.0		-11.800	-8.000	-10.829	-5.176	-8.388
87.0		3.033	-8.257	-3.908	-3.072	-2.368
88.0		-1.600	-3.388	-7.883	-8.072	1.622
93.0		-1.426	-1.404	-0.182	-4.943	-0.468
96.0		-2.331	-2.203	1.470	-0.077	-6.293
100.0		-5.504	-5.838	-5.853	-5.032	-4.070
2.5	(LOWER)	-0.863	-1.087	-0.990	-0.854	-1.057
5.0		-0.424	-1.135	-1.208	-0.977	-0.983
10.0		-0.918	-1.053	-1.079	-1.226	-0.980
24.0		-1.030	-1.315	-1.270	-1.158	-1.090
33.0		-1.388	-1.354	-1.419	-1.138	-0.882
54.0		-1.878	-1.433	-1.274	-1.308	-3.323
73.5		-1.198	-0.988	-0.811	-1.531	-0.064
84.0		-1.125	-1.005	-5.472	-0.372	-0.067
96.0		-1.543	-1.506	-1.338	-0.902	-0.090

WING PRESSURE COEFFICIENTS

RUN 345 POINT 2 ALPHA 0.00 PSI 0.00 HEIGHT 32.86

X/C, %		BP 2	BP 6	BP 12	BP 16	BP 22
0.0	(UPPER)	-1.755	-3.081	-4.141	-3.199	-2.563
2.5		-1.406	-2.066	-3.007	-3.199	-2.200
5.0		-1.183	-1.798	-2.971	-3.181	-2.454
10.0		-1.095	-1.561	-1.807	-2.925	-2.142
15.0		-1.001	-1.014	-1.561	-2.347	-2.308
24.0		-0.879	-1.315	-1.430	-1.276	-2.028
33.0		-0.901	-1.181	-1.007	-1.180	-1.911
54.0		-2.750	-1.610	-1.583	0.248	-2.317
65.0		-0.331	-2.616	-2.307	-2.558	-3.157
78.5		-0.257	-8.530	-7.530	-8.340	-8.027
79.5		-105.710	-137.943	-122.504	-108.294	-140.181
80.5		-13.350	-17.475	-19.741	-43.346	-0.338
81.5		-4.830	0.127	-7.805	-14.803	-23.188
82.0		8.951	-3.883	8.070	-9.367	-10.582
84.0		-14.172	-8.425	-12.744	-8.472	-8.252
87.0		2.186	-9.745	-5.372	-4.345	-4.006
89.0		-2.287	-4.276	-9.320	-9.618	0.386
93.0		-2.227	-1.920	-0.888	-8.105	-0.417
98.0		-2.906	-2.680	1.180	-1.701	-8.147
100.0		-4.747	-4.800	-4.888	-4.403	-4.280
2.5	(LOWER)	0.118	0.082	0.103	0.237	-0.146
5.0		0.420	-0.100	-0.081	0.150	-0.041
10.0		-0.125	0.025	0.083	-0.086	-0.101
24.0		-0.010	-0.212	-0.077	-0.010	-0.347
33.0		-0.272	-0.168	-0.232	-0.022	-0.605
54.0		-0.484	-0.140	-0.061	-0.256	-3.556
73.5		0.182	0.406	0.335	-1.888	-0.151
84.0		0.242	-1.200	-7.437	-0.477	-0.367
98.0		-0.281	-0.230	-0.252	-0.183	-0.640

RUN 345 POINT 3 ALPHA -0.03 PSI 0.00 HEIGHT 65.64

X/C, %		BP 2	BP 6	BP 12	BP 16	BP 22
0.0	(UPPER)	-0.588	-1.100	-2.220	-2.888	-3.787
2.5		-1.060	-1.488	-2.484	-2.307	-3.380
5.0		-0.910	-1.286	-1.524	-1.794	-2.253
10.0		-0.850	-1.226	-1.346	-1.480	-1.555
15.0		-0.833	-0.856	-1.432	-1.337	-1.884
24.0		-0.791	-1.187	-1.295	-1.067	-1.345
33.0		-0.790	-1.063	-1.477	-1.214	-1.384
54.0		-2.828	-1.554	-1.518	7.908	-2.028
65.0		-0.432	-2.543	-2.353	-2.580	-2.978
78.5		-0.349	-8.881	-7.526	-8.471	-8.815
79.5		-107.498	-133.815	-119.451	-104.805	-135.206
80.5		-13.135	-18.805	-19.544	-42.047	-0.268
81.5		-5.128	-0.006	-7.784	-14.606	-21.092
82.0		8.271	-4.152	8.462	-8.370	-9.073
84.0		-13.908	-8.457	-12.547	-8.518	-7.858
87.0		1.781	-9.581	-5.494	-4.458	-3.787
89.0		-2.444	-4.329	-9.211	-9.614	0.190
93.0		-2.331	-2.030	-1.017	-8.167	-0.511
98.0		-3.066	-2.713	0.836	-1.854	-8.001
100.0		-3.490	-3.752	-4.044	-3.815	-3.950
2.5	(LOWER)	-0.079	-0.003	0.156	0.304	-0.044
5.0		0.248	-0.230	-0.180	0.186	0.050
10.0		-0.281	-0.107	0.011	-0.085	-0.003
24.0		-0.125	-0.237	-0.031	0.071	-0.179
33.0		-0.280	-0.152	-0.105	0.100	-0.002
54.0		-0.258	0.057	0.083	-0.008	-3.379
73.5		0.386	0.550	0.432	-1.580	-0.040
84.0		0.383	-1.157	-7.286	-0.477	-0.304
98.0		0.044	0.083	-0.009	0.024	-0.534

WING PRESSURE COEFFICIENTS

RUN 345 POINT 4 ALPHA 0.05 PSI 0.00 HEIGHT 87.95

X/C, %		BP 2	BP 6	BP 12	BP 16	BP 22
0.0	(UPPER)	-0.585	-1.030	-2.186	-2.012	-3.767
2.5		-1.007	-1.406	-2.034	-2.328	-3.307
5.0		-0.923	-1.320	-1.557	-1.837	-2.217
10.0		-0.886	-1.240	-1.331	-1.530	-1.580
15.0		-0.906	-0.902	-1.406	-1.308	-1.737
24.0		-0.825	-1.222	-1.343	-1.116	-1.383
33.0		-0.801	-1.111	-1.522	-1.277	-1.442
54.0		-2.887	-1.614	-1.574	7.875	-2.070
65.0		-0.463	-2.006	-2.410	-2.877	-3.057
78.5		-0.305	-8.818	-7.605	-8.083	-8.074
79.5		-107.314	-133.948	-110.832	-106.842	-136.612
80.5		-13.383	-16.077	-19.910	-42.306	-0.313
81.5		-5.208	0.032	-8.013	-14.817	-22.317
82.0		8.108	-4.318	2.374	-9.905	-8.729
84.0		-14.046	-8.826	-12.872	-8.748	-7.842
87.0		1.730	-9.882	-5.538	-4.640	-3.982
89.0		-2.530	-4.433	-9.340	-9.710	0.077
93.0		-2.302	-2.002	-1.078	-8.263	-0.987
98.0		-3.148	-2.788	0.886	-1.832	-8.142
100.0		-3.541	-3.815	-4.107	-3.845	-4.004
2.5	(LOWER)	-0.110	-0.057	0.115	0.284	-0.053
5.0		0.153	-0.273	-0.178	0.134	0.027
10.0		-0.332	-0.127	-0.030	-0.119	-0.031
24.0		-0.180	-0.310	-0.090	0.026	-0.226
33.0		-0.324	-0.186	-0.145	0.058	-0.712
54.0		-0.304	0.027	0.070	-0.198	-3.387
73.5		0.229	0.533	0.410	-1.530	-0.067
84.0		0.590	-1.167	-7.425	-0.471	-0.325
98.0		0.017	0.040	-0.033	0.013	-0.940

RUN 345 POINT 1 ALPHA -0.02 PSI 0.00 HEIGHT 10.53

X/C, %		BP 2	BP 6	BP 12	BP 16	BP 22
0.0	(UPPER)	-1.280	-2.518	-3.925	-3.100	-2.103
2.5		-1.068	-1.475	-2.542	-2.900	-1.820
5.0		-0.853	-1.290	-1.885	-2.087	-1.872
10.0		-0.770	-1.082	-1.266	-2.175	-1.081
15.0		-0.714	-0.833	-1.190	-1.277	-1.743
24.0		-0.683	-0.901	-1.058	-0.822	-1.467
33.0		-0.850	-0.842	-1.084	-0.900	-1.221
54.0		-0.940	-1.129	-1.175	4.367	-1.520
65.0		-0.052	-1.804	-1.741	-1.885	-2.130
78.5		-0.013	-4.730	-5.003	-8.030	-8.242
79.5		-95.500	-71.810	-88.318	-86.880	-72.183
80.5		-8.300	-9.290	-11.863	-23.238	0.018
81.5		-3.714	0.455	-5.595	-8.070	-13.400
82.0		3.184	-3.304	3.428	-6.303	-7.003
84.0		-7.742	-5.098	-7.186	-4.520	-5.540
87.0		0.843	-5.223	-3.518	-3.024	-3.171
89.0		-1.400	-2.501	-5.181	-5.400	-1.014
93.0		-1.138	-1.136	-0.888	-3.481	-0.083
98.0		-1.421	-1.378	0.440	-1.180	-5.022
100.0		-2.003	-2.815	-2.734	-2.379	-2.285
2.5	(LOWER)	0.412	0.358	0.358	0.370	0.134
5.0		0.539	0.230	0.224	0.222	0.130
10.0		0.219	0.208	0.274	0.123	0.000
24.0		0.214	0.103	0.045	-0.020	-0.274
33.0		0.070	0.026	-0.128	-0.100	-0.174
54.0		-0.338	-0.234	-0.215	-0.252	-1.336
73.5		0.004	0.324	0.348	-0.004	0.160
84.0		0.322	-0.147	-4.839	0.263	0.120
98.0		-0.155	-0.079	-0.025	0.079	-0.155

WING PRESSURE COEFFICIENTS

RUN 346 POINT 2 ALPHA 0.01 PSI 0.00 HEIGHT 32.06

X/C, %		DP 2	DP 6	DP 12	DP 16	DP 22
0.0	(UPPER)	-0.373	-1.081	-2.050	-2.150	-2.512
2.5		-0.811	-1.025	-1.500	-2.210	-2.000
5.0		-0.054	-0.978	-1.268	-1.530	-2.115
10.0		-0.506	-0.845	-1.030	-1.212	-1.800
15.0		-0.254	-0.873	-1.041	-1.068	-1.750
24.0		-0.563	-0.866	-0.940	-0.878	-1.140
33.0		-0.587	-0.740	-0.904	-0.940	-0.904
54.0		-0.942	-1.078	-1.130	4.104	-1.481
65.0		-0.002	-1.797	-1.757	-1.961	-2.222
78.5		0.026	-4.861	-5.000	-6.330	-6.000
79.5		-62.002	-70.817	-68.331	-68.190	-73.135
80.5		-8.826	-9.306	-12.177	-23.225	0.161
81.5		-3.976	0.407	-5.985	-9.462	-14.110
82.0		2.304	-3.546	2.984	-6.051	-7.002
84.0		-7.701	-5.318	-7.390	-4.856	-6.135
87.0		0.400	-5.414	-3.793	-3.406	-3.724
89.0		-1.471	-2.713	-5.420	-5.750	-1.576
93.0		-1.293	-1.349	-0.967	-3.800	-0.029
96.0		-1.717	-1.568	0.182	-1.456	-5.537
100.0		-1.400	-1.512	-1.746	-1.041	-1.063
2.5	(LOWER)	0.276	0.331	0.429	0.404	0.290
5.0		0.385	0.182	0.227	0.410	0.320
10.0		0.136	0.255	0.310	0.271	0.251
24.0		0.104	0.148	0.274	0.287	0.002
33.0		0.140	0.214	0.248	0.330	-0.124
54.0		0.217	0.364	0.377	0.267	-1.346
73.5		0.587	0.608	0.983	-0.417	0.133
84.0		0.625	-0.177	-5.399	0.188	-0.015
96.0		0.458	0.500	0.434	0.403	-0.105

RUN 346 POINT 3 ALPHA -0.01 PSI 0.00 HEIGHT 85.06

X/C, %		DP 2	DP 6	DP 12	DP 16	DP 22
0.0	(UPPER)	-0.223	-0.753	-1.756	-2.300	-3.413
2.5		-0.825	-1.180	-1.820	-1.730	-2.784
5.0		-0.886	-0.860	-1.256	-1.482	-1.763
10.0		-0.880	-0.823	-1.063	-1.240	-1.317
15.0		-0.836	-0.757	-1.075	-1.112	-1.336
24.0		-0.882	-0.868	-1.012	-0.947	-1.110
33.0		-0.860	-0.853	-1.000	-1.031	-1.110
54.0		-1.003	-1.203	-1.286	4.205	-1.823
65.0		-0.240	-1.950	-1.967	-2.120	-2.434
78.5		-0.211	-5.358	-6.006	-6.783	-7.150
79.5		-67.188	-73.237	-72.590	-72.184	-74.791
80.5		-9.906	-8.884	-12.015	-24.000	-0.083
81.5		-4.581	0.355	-8.481	-10.014	-14.378
82.0		2.335	-4.047	2.866	-7.183	-7.000
84.0		-8.417	-5.776	-7.927	-5.225	-6.030
87.0		0.170	-5.874	-4.175	-3.881	-3.757
89.0		-1.857	-3.041	-5.852	-6.193	-1.821
93.0		-1.835	-1.634	-1.210	-4.104	-0.270
96.0		-2.040	-1.820	0.025	-1.054	-5.095
100.0		-1.702	-1.722	-1.800	-1.783	-2.120
2.5	(LOWER)	0.182	0.217	0.384	0.418	0.241
5.0		0.292	0.036	0.143	0.300	0.254
10.0		-0.003	0.127	0.181	0.144	0.156
24.0		0.048	0.028	0.129	0.177	-0.002
33.0		-0.013	0.000	0.138	0.218	-0.350
54.0		0.067	0.271	0.316	0.215	-1.375
73.5		0.504	0.841	0.568	-0.433	0.110
84.0		0.531	-0.220	-5.554	0.162	-0.035
96.0		0.331	0.428	0.375	0.375	-0.129

WING PRESSURE COEFFICIENTS

RUN 346 POINT 4 ALPHA -0.03 PSI 0.00 HEIGHT 87.00

X/C, %		DP 2	DP 6	DP 12	DP 16	DP 22
0.0	(UPPER)	-0.198	-0.878	-1.800	-2.254	-3.320
2.5		-0.827	-1.190	-2.003	-1.721	-2.730
5.0		-0.720	-1.040	-1.246	-1.406	-1.775
10.0		-0.710	-0.838	-1.081	-1.272	-1.305
15.0		-0.806	-0.753	-1.127	-1.151	-1.370
24.0		-0.854	-0.817	-1.043	-0.881	-1.142
33.0		-0.804	-0.870	-1.130	-1.004	-1.161
54.0		-1.004	-1.201	-1.323	4.204	-1.870
65.0		-0.281	-2.005	-2.022	-2.210	-2.400
78.5		-0.236	-5.487	-6.241	-6.951	-7.302
79.5		-90.240	-74.004	-73.057	-73.063	-78.224
80.5		-10.307	-8.083	-13.208	-24.500	-0.004
81.5		-4.700	0.400	-8.837	-10.248	-14.817
82.0		2.432	-4.178	2.907	-7.203	-7.740
84.0		-8.500	-5.002	-8.000	-5.410	-6.158
87.0		0.107	-6.033	-4.240	-3.700	-3.700
89.0		-1.018	-3.127	-5.007	-6.345	-1.870
93.0		-1.001	-1.004	-1.206	-4.220	-0.312
96.0		-2.114	-1.008	-0.075	-1.720	-5.814
100.0		-1.784	-1.810	-1.900	-1.040	-2.190
2.5	(LOWER)	0.136	0.172	0.304	0.303	0.224
5.0		0.240	-0.003	0.004	0.201	0.220
10.0		-0.002	0.083	0.157	0.118	0.127
24.0		0.013	-0.027	0.006	0.140	-0.030
33.0		-0.043	0.030	0.100	0.190	-0.000
54.0		0.090	0.253	0.200	0.106	-1.417
73.5		0.475	0.622	0.504	-0.451	0.007
84.0		0.490	-0.243	-5.000	0.152	-0.042
96.0		0.310	0.410	0.382	0.250	-0.152

RUN 347 POINT 1 ALPHA 0.01 PSI 0.00 HEIGHT 48.17

X/C, %		DP 2	DP 6	DP 12	DP 16	DP 22
0.0	(UPPER)	-3.077	-4.000	-3.900	-2.940	-2.977
2.5		-2.021	-4.000	-3.812	-3.135	-2.581
5.0		-1.531	-4.140	-3.720	-3.214	-2.083
10.0		-1.201	-1.232	-3.075	-2.322	-2.587
15.0		-1.103	-1.117	-3.436	-2.470	-2.720
24.0		-1.007	-1.182	-1.440	-2.200	-2.075
33.0		-0.907	-1.050	-1.041	-2.300	-2.630
54.0		-1.236	-1.335	-1.200	4.230	-3.700
65.0		-0.120	-2.112	-1.900	-1.001	-4.770
78.5		-0.063	-5.562	-6.226	-6.900	-7.400
79.5		-100.140	-75.074	-75.307	-74.730	-78.735
80.5		-9.575	-10.104	-13.322	-24.950	-0.041
81.5		-4.441	0.267	-8.752	-10.314	-17.202
82.0		2.000	-4.000	3.040	-7.300	-10.816
84.0		-8.371	-6.027	-8.140	-5.564	-6.000
87.0		0.300	-6.102	-4.200	-4.040	-5.463
89.0		-1.711	-3.133	-6.127	-6.400	-2.000
93.0		-1.001	-1.000	-1.304	-4.400	-0.135
96.0		-2.218	-1.037	-0.034	-1.002	-6.810
100.0		-1.470	-1.810	-1.007	-1.001	-1.001
2.5	(LOWER)	0.482	0.351	0.344	0.309	0.040
5.0		0.020	0.312	0.311	0.422	0.264
10.0		0.318	0.305	0.420	0.351	0.270
24.0		0.310	0.281	0.340	0.302	0.118
33.0		0.194	0.275	0.296	0.370	-0.220
54.0		0.201	0.302	0.300	0.202	-1.505
73.5		0.007	0.718	0.633	-0.521	0.011
84.0		0.020	-0.300	-5.070	0.025	-0.114
96.0		0.461	0.487	0.303	0.341	-0.197

WING PRESSURE COEFFICIENTS

RUN 347 POINT 2 ALPHA 8.07 PSI 0.00 HEIGHT 85.78

X/C, %		BP 2	BP 6	BP 12	BP 16	BP 22
0.0	(UPPER)	-3.305	-4.787	-3.027	-3.011	-2.587
2.5		-1.888	-4.648	-3.701	-3.178	-2.587
5.0		-1.484	-3.108	-3.586	-3.241	-2.867
10.0		-1.271	-1.301	-3.324	-3.324	-2.581
15.0		-1.087	-1.132	-2.876	-3.370	-2.083
24.0		-0.947	-1.203	-1.519	-2.875	-2.630
33.0		-0.900	-1.081	-1.171	-1.978	-2.727
54.0		-1.175	-1.306	-1.327	4.081	-3.363
65.0		-0.188	-2.129	-2.007	-1.031	-4.312
78.5		-0.171	-5.603	-6.233	-6.688	-7.617
79.5		-87.151	-73.250	-73.348	-73.684	-75.068
80.5		-9.906	-10.008	-13.905	-24.227	-0.000
81.5		-4.547	0.280	-6.818	-10.252	-16.071
82.0		2.431	-4.241	2.005	-7.361	-10.874
84.0		-8.310	-8.633	-7.898	-5.554	-8.819
87.0		0.146	-5.974	-4.262	-4.053	-5.568
89.0		-1.800	-3.145	-6.026	-6.376	-3.219
93.0		-1.761	-1.741	-1.360	-4.356	-0.220
96.0		-2.235	-1.957	-0.122	-1.915	-6.573
100.0		-1.500	-1.604	-1.819	-1.737	-1.588
2.5	(LOWER)	0.434	0.362	0.361	0.336	0.005
5.0		0.559	0.314	0.303	0.429	0.279
10.0		0.294	0.368	0.403	0.348	0.267
24.0		0.285	0.220	0.322	0.338	0.087
33.0		0.100	0.248	0.274	0.256	-0.313
54.0		0.185	0.350	0.364	0.262	-1.478
73.5		0.584	0.721	0.619	-0.413	0.011
84.0		0.632	-0.203	-7.163	0.043	-0.114
96.0		0.431	0.485	0.394	0.350	-0.194

RUN 347 POINT 3 ALPHA 8.06 PSI 0.00 HEIGHT 86.71

X/C, %		BP 2	BP 6	BP 12	BP 16	BP 22
0.0	(UPPER)	-3.323	-4.902	-3.012	-3.206	-2.732
2.5		-1.825	-4.713	-3.707	-3.372	-2.726
5.0		-1.536	-2.524	-3.625	-3.429	-2.706
10.0		-1.327	-1.474	-3.280	-3.514	-2.700
15.0		-1.178	-1.215	-2.873	-3.487	-2.826
24.0		-1.032	-1.276	-1.578	-2.775	-2.743
33.0		-0.978	-1.162	-1.302	-1.835	-2.813
54.0		-1.223	-1.455	-1.432	4.154	-3.340
65.0		-0.206	-2.230	-2.152	-2.122	-4.229
78.5		-0.237	-5.823	-6.477	-7.026	-7.878
79.5		-90.546	-74.884	-75.110	-76.564	-77.300
80.5		-10.298	-10.331	-13.427	-24.988	-0.104
81.5		-4.770	0.282	-7.091	-10.836	-17.429
82.0		2.340	-4.422	2.680	-7.825	-10.958
84.0		-8.611	-8.297	-8.295	-9.787	-9.043
87.0		0.100	-6.243	-4.475	-4.229	-5.703
89.0		-1.920	-3.312	-6.232	-6.820	-3.300
93.0		-1.839	-1.854	-1.472	-4.522	-0.278
96.0		-2.320	-2.078	-0.197	-2.012	-7.236
100.0		-1.881	-1.887	-1.924	-1.827	-2.105
2.5	(LOWER)	0.411	0.330	0.325	0.323	0.076
5.0		0.526	0.271	0.275	0.402	0.252
10.0		0.245	0.348	0.386	0.311	0.232
24.0		0.212	0.181	0.267	0.292	0.046
33.0		0.126	0.196	0.223	0.317	-0.378
54.0		0.126	0.321	0.338	0.233	-1.566
73.5		0.566	0.658	0.601	-0.417	-0.040
84.0		0.585	-0.135	-7.406	0.039	-0.151
96.0		0.395	0.446	0.389	0.334	-0.240

WING PRESSURE COEFFICIENTS

RUN 348 POINT 1 ALPHA 8.06 PSI -5.01 HEIGHT 48.44

X/C, %		BP 2	BP 6	BP 12	BP 16	BP 22
0.0	(UPPER)	-4.420	-4.836	-3.829	-2.798	-2.811
2.5		-2.195	-4.979	-3.900	-3.017	-2.815
5.0		-1.848	-4.938	-3.812	-3.130	-2.720
10.0		-1.344	-1.128	-4.116	-3.336	-2.858
15.0		-1.187	-1.085	-3.950	-3.838	-2.777
24.0		-0.994	-1.125	-1.100	-2.412	-2.804
33.0		-0.910	-1.074	-1.021	-2.202	-3.104
54.0		-1.278	-1.374	-1.283	4.080	-4.024
65.0		-0.134	-2.187	-2.031	-1.833	-4.051
78.5		-0.103	-5.748	-6.437	-6.875	-7.190
79.5		-88.773	-74.06	-75.714	-77.005	-75.714
80.5		-10.020	-10.226	-13.570	-24.873	-0.021
81.5		-4.843	0.113	-7.045	-10.502	-16.887
82.0		2.484	-4.379	2.814	-7.500	-10.530
84.0		-8.403	-8.237	-8.175	-9.778	-8.777
87.0		0.262	-5.161	-4.549	-4.185	-5.312
89.0		-1.738	-3.232	-6.168	-6.500	-2.004
93.0		-1.774	-1.793	-1.304	-4.424	-0.133
95.0		-2.292	-1.978	-0.073	-1.929	-6.577
100.0		-1.275	-1.512	-1.871	-1.827	-2.024
2.5	(LOWER)	0.510	0.278	0.188	0.175	-0.008
5.0		0.607	0.322	0.253	0.326	0.180
10.0		0.329	0.386	0.401	0.310	0.180
24.0		0.287	0.255	0.320	0.332	0.054
33.0		0.181	0.205	0.262	0.253	-0.254
54.0		0.174	0.306	0.362	0.248	-1.505
73.5		0.529	0.714	0.600	-0.404	-0.087
84.0		0.564	-0.116	-6.825	-0.019	-0.244
96.0		0.575	0.518	0.374	0.304	-0.283

RUN 348 POINT 2 ALPHA 8.07 PSI -5.01 HEIGHT 85.88

X/C, %		BP 2	BP 6	BP 12	BP 16	BP 22
0.0	(UPPER)	-4.030	-4.778	-3.402	-2.880	-2.575
2.5		-2.100	-4.750	-3.810	-3.053	-2.579
5.0		-1.578	-4.454	-3.677	-3.146	-2.673
10.0		-1.319	-1.158	-3.880	-3.315	-2.880
15.0		-1.121	-1.080	-3.584	-3.890	-2.734
24.0		-0.983	-1.102	-1.171	-3.205	-2.741
33.0		-0.929	-1.003	-1.020	-2.087	-2.956
54.0		-1.240	-1.384	-1.345	4.011	-3.753
65.0		-0.207	-2.211	-2.076	-1.830	-4.087
78.5		-0.186	-5.813	-6.483	-6.945	-7.420
79.5		-87.781	-73.940	-74.957	-76.800	-75.124
80.5		-10.230	-10.252	-13.348	-24.541	-0.080
81.5		-4.781	0.200	-7.007	-10.942	-17.001
82.0		2.282	-4.491	2.583	-7.830	-10.798
84.0		-8.412	-8.228	-8.006	-9.810	-8.819
87.0		0.151	-6.146	-4.583	-4.180	-5.056
89.0		-1.830	-3.283	-6.154	-6.475	-3.230
93.0		-1.837	-1.830	-1.412	-4.406	-0.214
96.0		-2.320	-2.024	-0.154	-1.948	-6.880
100.0		-1.334	-1.571	-1.874	-1.811	-2.066
2.5	(LOWER)	0.470	0.295	0.261	0.210	-0.045
5.0		0.577	0.308	0.248	0.337	0.171
10.0		0.305	0.340	0.268	0.282	0.180
24.0		0.261	0.225	0.300	0.301	0.035
33.0		0.151	0.230	0.252	0.318	-0.320
54.0		0.164	0.356	0.348	0.212	-1.513
73.5		0.525	0.717	0.605	-0.400	-0.112
84.0		0.572	-0.033	-7.191	0.009	-0.200
96.0		0.544	0.500	0.380	0.315	-0.314

WING PRESSURE COEFFICIENTS

RUN 348 POINT 3 ALPHA 8.06 PSI -5.01 HEIGHT 88.75

X/C, %		DP 2	DP 6	DP 12	DP 16	DP 22
0.0	(UPPER)	-3.810	-4.804	-3.527	-2.836	-2.881
2.5		-2.005	-4.710	-3.818	-3.117	-2.866
5.0		-1.981	-4.210	-3.668	-3.206	-2.686
10.0		-1.306	-1.220	-3.724	-3.381	-2.621
15.0		-1.119	-1.134	-3.304	-3.614	-2.738
24.0		-0.900	-1.190	-1.279	-3.213	-2.745
33.0		-0.933	-1.101	-1.055	-2.020	-2.033
54.0		-1.210	-1.421	-1.377	4.033	-3.874
85.0		-0.230	-2.244	-2.113	-2.010	-4.835
78.5		-0.216	-5.880	-6.568	-7.063	-7.580
79.5		-87.798	-72.895	-75.401	-77.308	-75.345
80.5		-10.305	-10.350	-13.413	-24.615	-9.102
81.5		-4.872	0.246	-7.188	-10.876	-17.238
82.0		2.145	-4.530	2.548	-7.887	-10.023
84.0		-8.495	-6.352	-6.188	-5.824	-8.100
87.0		0.115	-8.263	-4.829	-4.204	-5.730
88.0		-1.880	-3.320	-6.202	-6.535	-3.300
93.0		-1.881	-1.801	-1.445	-4.058	-0.298
98.0		-2.277	-2.063	-0.178	-1.881	-6.903
100.0		-1.384	-1.588	-1.811	-1.828	-2.107
2.5	(LOWER)	0.418	0.282	0.244	0.219	-0.038
5.0		0.588	0.284	0.243	0.331	0.170
10.0		0.305	0.348	0.351	0.273	0.190
24.0		0.243	0.298	0.283	0.279	0.020
33.0		0.141	0.214	0.247	0.297	-0.344
54.0		0.140	0.347	0.338	0.218	-1.495
73.5		0.518	0.714	0.603	-0.383	-0.124
84.0		0.588	0.020	-7.274	0.034	-0.177
98.0		0.535	0.485	0.367	0.304	-0.327

RUN 349 POINT 1 ALPHA 0.02 PSI -5.01 HEIGHT 10.88

X/C, %		DP 2	DP 6	DP 12	DP 16	DP 22
0.0	(UPPER)	-2.122	-3.833	-3.232	-2.582	-2.258
2.5		-1.312	-2.875	-2.834	-2.426	-2.048
5.0		-1.008	-1.416	-2.586	-2.205	-1.875
10.0		-0.940	-1.212	-2.352	-2.050	-1.712
15.0		-0.788	-0.988	-1.939	-1.884	-1.682
24.0		-0.747	-1.021	-1.206	-1.595	-1.446
33.0		-0.729	-0.926	-1.138	-1.329	-1.351
54.0		-1.344	-1.184	-1.142	4.018	-1.551
85.0		-0.114	-1.837	-1.874	-1.703	-1.812
78.5		-0.072	-4.708	-5.055	-4.879	-4.526
79.5		-88.187	-71.918	-67.083	-57.887	-68.005
80.5		-8.224	-8.140	-11.884	-22.078	-0.081
81.5		-2.523	0.150	-5.232	-7.978	-11.386
82.0		3.497	-3.068	3.884	-5.247	-5.060
84.0		-7.425	-5.070	-6.710	-3.781	-3.800
87.0		1.608	-5.210	-3.287	-2.437	-1.778
88.0		-0.958	-2.418	-5.013	-4.880	0.298
93.0		-0.818	-1.094	-0.526	-3.981	-0.107
98.0		-1.188	-1.380	0.518	-0.885	-3.840
100.0		-4.130	-3.978	-3.823	-3.902	-2.500
2.5	(LOWER)	0.481	0.388	0.130	-0.268	-0.059
5.0		0.583	0.232	-0.037	-0.281	-0.528
10.0		0.310	0.355	-0.062	-0.417	-0.522
24.0		0.210	-0.020	-0.380	-0.523	-0.614
33.0		0.040	-0.147	-0.557	-0.542	-0.221
54.0		-0.353	-0.407	-0.573	-0.844	-1.835
73.5		-0.337	0.014	-0.018	-0.483	-0.295
84.0		0.121	-0.030	3.546	-0.022	-0.222
98.0		-0.840	-0.824	-0.497	-0.386	-0.555

WING PRESSURE COEFFICIENTS

RUN 349 POINT 2 ALPHA 0.02 PSI -5.01 HEIGHT 32.81

X/C, %		DP 2	DP 6	DP 12	DP 16	DP 22
0.0	(UPPER)	-0.730	-1.583	-3.104	-3.315	-2.087
2.5		-1.083	-1.147	-1.817	-2.104	-1.884
5.0		-0.708	-1.073	-1.343	-2.611	-1.875
10.0		-0.871	-0.916	-1.042	-1.034	-1.740
15.0		-0.800	-0.710	-1.073	-1.016	-1.795
24.0		-0.808	-0.807	-0.873	-0.895	-1.534
33.0		-0.588	-0.700	-1.055	-0.504	-1.380
54.0		-1.200	-1.134	-1.186	3.042	-1.505
85.0		-0.000	-1.004	-1.052	-2.020	-2.253
78.5		-0.005	-5.077	-5.041	-6.508	-6.818
79.5		-85.830	-72.127	-70.944	-71.238	-74.567
80.5		-8.300	-8.425	-12.540	-23.875	0.075
81.5		-4.247	0.178	-6.270	-8.827	-14.874
82.0		2.000	-3.874	3.110	-6.858	-8.218
84.0		-8.020	-5.612	-7.440	-5.138	-6.450
87.0		0.542	-5.823	-3.925	-3.953	-3.801
88.0		-1.487	-2.830	-5.500	-6.813	-1.500
93.0		-1.217	-1.487	-1.003	-3.912	-0.037
98.0		-1.772	-1.800	0.176	-1.487	-5.000
100.0		-1.238	-1.500	-1.832	-1.724	-2.055
2.5	(LOWER)	0.348	0.326	0.348	0.308	0.131
5.0		0.434	0.186	0.215	0.340	0.230
10.0		0.158	0.258	0.206	0.243	0.186
24.0		0.200	0.144	0.236	0.240	0.024
33.0		0.122	0.187	0.220	0.319	-0.163
54.0		0.177	0.371	0.340	0.256	-1.617
73.5		0.563	0.672	0.552	-0.484	-0.015
84.0		0.601	0.006	-5.414	-0.011	-0.217
98.0		0.572	-0.021	0.302	0.337	-0.534

RUN 349 POINT 3 ALPHA 0.00 PSI -5.01 HEIGHT 65.63

X/C, %		DP 2	DP 6	DP 12	DP 16	DP 22
0.0	(UPPER)	-0.457	-1.078	-2.181	-2.834	-3.023
2.5		-0.884	-1.058	-1.534	-1.913	-2.583
5.0		-0.882	-1.000	-1.217	-1.443	-2.476
10.0		-0.881	-0.884	-1.023	-1.213	-1.081
15.0		-0.818	-0.888	-1.040	-1.080	-1.277
24.0		-0.580	-0.884	-0.982	-0.943	-1.000
33.0		-0.806	-0.795	-1.050	-0.505	-0.982
54.0		-1.237	-1.177	-1.224	3.884	-1.943
85.0		-0.222	-1.870	-1.818	-2.085	-2.204
78.5		-0.200	-5.300	-6.020	-6.080	-7.030
79.5		-85.649	-71.614	-71.086	-71.831	-73.588
80.5		-10.032	-8.500	-12.042	-23.579	-0.138
81.5		-4.826	0.230	-6.415	-8.827	-14.484
82.0		2.231	-3.877	2.787	-7.000	-7.050
84.0		-8.207	-5.838	-7.547	-5.220	-6.138
87.0		0.200	-5.838	-4.083	-3.871	-3.000
88.0		-1.887	-3.000	-5.700	-5.877	-1.527
93.0		-1.548	-1.830	-1.130	-3.905	-0.220
98.0		-1.978	-1.700	0.040	-1.500	-5.420
100.0		-1.574	-1.672	-1.874	-1.744	-2.108
2.5	(LOWER)	0.246	0.251	0.308	0.244	0.123
5.0		0.250	0.090	0.142	0.200	0.208
10.0		0.052	0.172	0.197	0.158	0.138
24.0		0.080	0.037	0.147	0.184	-0.025
33.0		0.026	0.081	0.140	0.237	-0.322
54.0		0.103	0.204	0.200	0.205	-1.525
73.5		0.521	0.848	0.542	-0.411	0.007
84.0		0.587	0.064	-5.325	0.023	-0.188
98.0		0.480	-0.788	0.180	0.332	-0.211

WING PRESSURE COEFFICIENTS

RUN 340 POINT 4 ALPHA -0.02 PSI -5.01 HEIGHT 87.00

X/C, %		BP 2	BP 6	BP 12	BP 16	BP 22
0.0	(UPPER)	-0.474	-1.100	-2.230	-2.082	-3.470
2.5		-0.823	-1.230	-1.587	-1.833	-3.063
5.0		-0.752	-1.077	-1.291	-1.523	-2.477
10.0		-0.724	-0.940	-1.070	-1.281	-1.303
15.0		-0.8[illegible]	-0.751	-1.127	-1.184	-1.285
24.0		-0.861	-0.907	-1.034	-1.010	-1.111
33.0		-0.881	-0.873	-1.134	-1.060	-1.000
54.0		-1.306	-1.264	-1.325	4.027	-1.048
65.0		-0.272	-2.000	-2.048	-2.216	-2.413
78.5		-0.256	-5.570	-6.326	-7.000	-7.400
79.5		-100.001	-74.818	-74.127	-75.412	-76.771
80.5		-10.588	-9.901	-13.100	-24.636	-0.148
81.5		-4.909	0.175	-8.766	-10.331	-15.170
82.0		2.206	-4.177	2.915	-7.327	-8.214
84.0		-8.700	-8.075	-7.883	-5.495	-6.378
87.0		0.181	-6.005	-4.322	-3.864	-3.829
89.0		-1.827	-3.195	-6.018	-6.200	-1.812
93.0		-1.880	-1.746	-1.240	-4.229	-0.285
96.0		-2.100	-1.937	0.002	-1.706	-5.600
100.6		-1.763	-1.805	-2.012	-1.867	-2.233
2.5	(LOWER)	0.177	0.203	0.279	0.320	0.152
5.0		0.270	0.051	0.005	0.252	0.178
10.0		0.010	0.125	0.172	0.118	0.006
24.0		0.044	-0.014	0.101	0.123	-0.068
33.0		-0.023	0.058	0.103	0.195	-0.283
54.0		0.043	0.237	0.288	0.100	-1.810
73.5		0.501	0.835	0.517	-0.420	-0.041
84.0		0.583	0.048	-5.501	-0.001	-0.204
96.0		0.450	-0.817	0.340	0.310	-0.254

RUN 350 POINT 1 ALPHA -0.02 PSI -5.01 HEIGHT 19.78

X/C, %		BP 2	BP 6	BP 12	BP 16	BP 22
0.0	(UPPER)	-0.806	-1.578	-3.240	-3.184	-1.729
2.5		-0.815	-1.052	-1.642	-2.011	-1.618
5.0		-0.585	-0.883	-1.185	-2.831	-1.610
10.0		-0.555	-0.773	-0.943	-0.788	-1.519
15.0		-0.527	-0.800	-0.891	-0.813	-1.529
24.0		-0.488	-0.831	-0.777	-0.756	-1.375
33.0		-0.479	-0.804	-0.796	-0.783	-1.187
54.0		-0.582	-0.857	-0.945	3.458	-1.274
65.0		0.030	-1.386	-1.438	-1.505	-1.856
78.5		0.041	-3.712	-4.448	-5.115	-5.125
79.5		-57.527	-42.720	-45.185	-53.202	-41.027
80.5		-6.612	-6.393	-7.297	-14.090	0.005
81.5		-2.701	0.505	-4.830	-6.767	-8.548
82.0		0.849	-2.729	0.851	-5.072	-5.918
84.0		-4.374	-3.443	-4.614	-3.885	-4.700
87.0		0.380	-3.250	-2.636	-2.889	-3.008
89.0		-0.578	-1.615	-3.274	-3.788	-1.751
93.0		-0.442	-0.786	-0.690	-2.484	0.031
96.0		-0.783	-0.816	0.068	-1.050	-3.798
100.0		-0.481	-0.719	-1.083	-1.000	-1.286
2.5	(LOWER)	0.480	0.470	0.443	0.444	0.292
5.0		0.503	0.374	0.388	0.483	0.342
10.0		0.345	0.421	0.437	0.383	0.277
24.0		0.387	0.336	0.381	0.343	0.110
33.0		0.353	0.379	0.381	0.381	-0.028
54.0		0.384	0.483	0.406	0.311	-0.371
73.5		0.818	0.708	0.801	0.212	0.110
84.0		0.645	0.472	-3.758	0.458	0.343
96.0		0.670	0.050	0.435	0.381	-0.042

WING PRESSURE COEFFICIENTS

RUN 350 POINT 2 ALPHA 0.02 PSI -5.01 HEIGHT 32.80

X/C, %		BP 2	BP 6	BP 12	BP 16	BP 22
0.0	(UPPER)	-0.000	-1.183	-2.388	-3.120	-2.170
2.5		-0.700	-0.954	-1.458	-2.160	-1.827
5.0		-0.578	-0.846	-1.115	-1.322	-1.000
10.0		-0.587	-0.737	-0.940	-1.000	-1.713
15.0		-0.537	-0.821	-0.878	-0.988	-1.002
24.0		-0.500	-0.861	-0.801	-0.838	-1.122
33.0		-0.521	-0.851	-0.844	-0.836	-0.887
54.0		-0.870	-0.941	-1.020	2.400	-1.205
65.0		0.006	-1.564	-1.580	-1.747	-1.904
78.5		0.014	-4.231	-4.900	-5.480	-5.887
79.5		-85.790	-47.924	-48.856	-50.243	-44.505
80.5		-7.581	-7.706	-7.422	-14.500	0.077
81.5		-3.541	0.534	-5.221	-7.181	-10.492
82.0		0.120	-3.277	0.503	-5.520	-5.872
84.0		-5.002	-4.077	-5.671	-4.247	-5.241
87.0		-0.178	-3.754	-3.082	-2.971	-3.588
89.0		-1.107	-2.003	-3.004	-4.123	-2.316
93.0		-0.832	-1.175	-1.039	-2.772	0.008
96.0		-1.328	-1.161	-0.205	-1.302	-4.188
100.0		-0.542	-0.584	-0.754	-0.706	-1.000
2.5	(LOWER)	0.283	0.397	0.420	0.426	0.312
5.0		0.000	0.275	0.342	0.412	0.331
10.0		0.282	0.332	0.330	0.336	0.250
24.0		0.257	0.243	0.300	0.301	0.120
33.0		0.240	0.285	0.300	0.345	-0.086
54.0		0.331	0.432	0.457	0.378	-0.373
73.5		0.826	0.714	0.587	0.297	0.050
84.0		0.882	0.475	-4.313	0.444	0.341
96.0		0.864	0.045	0.500	0.520	0.027

RUN 350 POINT 3 ALPHA 0.00 PSI -5.01 HEIGHT 60.00

X/C, %		BP 2	BP 6	BP 12	BP 16	BP 22
0.0	(UPPER)	-0.212	-0.781	-1.737	-2.395	-3.243
2.5		-0.704	-0.939	-1.236	-1.545	-2.827
5.0		-0.563	-0.807	-1.021	-1.230	-1.000
10.0		-0.545	-0.710	-0.883	-1.035	-1.102
15.0		-0.530	-0.908	-0.884	-0.933	-1.012
24.0		-0.510	-0.870	-0.787	-0.827	-0.883
33.0		-0.526	-0.853	-0.848	-0.835	-0.875
54.0		-0.741	-0.870	-1.083	2.447	-1.204
65.0		-0.101	-1.810	-1.840	-1.788	-1.078
78.5		-0.003	-4.307	-5.026	-5.572	-5.075
79.5		-87.612	-48.217	-48.880	-50.753	-44.050
80.5		-7.857	-8.127	-7.548	-14.713	-0.048
81.5		-3.806	0.531	-5.341	-7.388	-10.426
82.0		-0.157	-3.580	0.457	-5.500	-5.556
84.0		-5.280	-4.262	-5.178	-4.302	-5.187
87.0		-0.352	-3.875	-3.188	-3.078	-3.458
89.0		-1.287	-2.220	-3.900	-4.187	-2.255
93.0		-1.087	-1.278	-1.118	-2.835	-0.004
96.0		-1.472	-1.252	-0.278	-1.357	-4.137
100.0		-0.720	-0.882	-0.818	-0.707	-1.079
2.5	(LOWER)	0.338	0.336	0.405	0.415	0.322
5.0		0.325	0.283	0.277	0.381	0.314
10.0		0.182	0.287	0.278	0.275	0.222
24.0		0.170	0.187	0.238	0.235	0.087
33.0		0.160	0.211	0.244	0.287	-0.181
54.0		0.254	0.387	0.415	0.350	-0.386
73.5		0.503	0.688	0.578	0.211	0.061
84.0		0.882	0.488	-4.287	0.452	0.346
96.0		0.590	0.040	0.578	0.538	0.018

WING PRESSURE COEFFICIENTS

RUN 350 POINT 4 ALPHA -0.01 PSI -5.01 HEIGHT 87.00

X/C, %		BP 2	BP 6	BP 12	BP 16	BP 22
0.0	(UPPER)	-0.183	-0.738	-1.882	-2.318	-3.242
2.5		-0.710	-1.024	-1.242	-1.526	-2.840
5.0		-0.576	-0.882	-1.025	-1.238	-1.522
10.0		-0.542	-0.732	-0.888	-1.048	-1.138
15.0		-0.534	-0.818	-0.882	-0.945	-1.038
24.0		-0.510	-0.858	-0.861	-0.844	-0.906
33.0		-0.538	-0.874	-0.855	-0.851	-0.888
54.0		-0.788	-0.900	-1.085	3.405	-1.313
65.0		-0.118	-1.044	-1.871	-1.812	-2.013
78.5		-9.108	-4.458	-5.088	-5.842	-6.068
79.5		-68.833	-50.088	-50.345	-57.803	-45.000
80.5		-7.840	-8.384	-7.578	-14.906	-0.083
81.5		-3.888	0.570	-5.438	-7.332	-10.555
82.0		-0.197	-3.840	0.456	-5.852	-8.508
84.0		-5.350	-4.345	-5.237	-4.378	-5.182
87.0		-0.387	-3.950	-3.200	-3.105	-3.503
88.0		-1.322	-2.282	-3.954	-4.242	-2.270
93.0		-1.133	-1.311	-1.130	-2.878	-0.108
96.0		-1.513	-1.275	-0.287	-1.377	-4.188
100.0		-0.754	-0.704	-0.842	-0.798	-1.104
2.5	(LOWER)	0.314	0.329	0.383	0.407	0.314
5.0		0.327	0.188	0.268	0.349	0.300
10.0		0.184	0.250	0.287	0.298	0.208
24.0		0.150	0.148	0.222	0.218	0.078
33.0		0.145	0.194	0.229	0.273	-0.174
54.0		0.244	0.360	0.413	0.338	-0.378
73.5		0.584	0.685	0.577	0.205	0.075
84.0		0.687	0.481	-4.340	0.448	0.343
96.0		0.577	0.630	0.572	0.530	0.015

RUN 351 POINT 1 ALPHA 8.03 PSI -5.01 HEIGHT 48.34

X/C, %		BP 2	BP 6	BP 12	BP 16	BP 22
0.0	(UPPER)	-3.825	-4.780	-3.444	-2.829	-2.408
2.5		-1.888	-4.058	-3.698	-2.926	-2.404
5.0		-1.490	-3.822	-3.505	-3.007	-2.454
10.0		-1.223	-1.104	-3.473	-3.205	-2.453
15.0		-1.068	-1.087	-3.135	-3.430	-2.487
24.0		-0.814	-1.034	-1.181	-3.054	-2.550
33.0		-0.841	-0.948	-0.853	-1.914	-2.738
54.0		-0.988	-1.178	-1.170	2.415	-3.401
65.0		-0.080	-1.039	-1.778	-1.874	-4.278
78.5		-0.054	-4.757	-5.386	-5.782	-6.344
79.5		-67.225	-50.870	-52.903	-60.538	-44.887
80.5		-7.888	-8.600	-7.778	-15.365	-0.013
81.5		-3.837	0.480	-5.833	-7.788	-12.408
82.0		-0.141	-3.887	0.275	-8.118	-8.857
84.0		-5.318	-4.493	-5.505	-4.786	7.512
87.0		-0.349	-4.082	-3.482	-3.449	-5.114
88.0		-1.285	-2.346	-4.181	-4.571	-3.834
93.0		-1.228	-1.406	-1.287	-3.168	-0.056
96.0		-1.587	-1.389	-0.421	-1.824	-4.744
100.0		-0.483	-0.541	-0.783	0.788	1.170
2.5	(LOWER)	0.582	0.413	0.312	0.282	0.077
5.0		0.830	0.443	0.415	0.424	0.282
10.0		0.483	0.488	0.478	0.417	0.293
24.0		0.367	0.368	0.404	0.374	0.152
33.0		0.318	0.370	0.382	0.400	0.122
54.0		0.332	0.484	0.485	0.374	0.428
73.5		0.601	0.787	0.677	0.182	-0.018
84.0		0.874	0.458	-5.341	0.388	0.268
96.0		0.683	0.617	0.567	0.474	0.057

WING PRESSURE COEFFICIENTS

RUN 351 POINT 2 ALPHA 8.01 PSI -5.01 HEIGHT 66.87

X/C, %		BP 2	BP 6	BP 12	BP 16	BP 22
0.0	(UPPER)	-3.843	-4.708	-3.411	-2.829	-2.387
2.5		-1.887	-4.548	-3.531	-2.910	-2.373
5.0		-1.432	-3.244	-3.388	-2.980	-2.412
10.0		-1.184	-1.130	-3.157	-3.153	-2.412
15.0		-1.026	-1.055	-2.790	-3.264	-2.440
24.0		-0.880	-1.042	-1.280	-2.793	-2.477
33.0		-0.827	-0.941	-0.819	-1.722	-2.619
54.0		-1.007	-1.177	-1.188	2.368	-3.167
65.0		-0.102	-1.819	-1.780	-1.735	-4.024
78.5		-0.000	-4.774	-5.381	-5.782	-6.400
79.5		-68.387	-51.134	-52.975	-60.208	-44.858
80.5		-7.776	-8.058	-7.047	-15.270	-0.008
81.5		-3.874	0.447	-5.829	-7.737	-12.400
82.0		-0.256	-3.900	0.230	-8.071	-8.885
84.0		-5.358	-4.532	-5.087	-4.784	-7.467
87.0		-0.410	-4.100	-3.490	-2.484	-5.130
88.0		-1.337	-2.378	-4.178	-4.544	-3.078
93.0		-1.201	-1.437	-1.313	-3.155	-0.076
96.0		-1.504	-1.411	-0.438	-1.817	-4.808
100.0		-0.545	-0.577	-0.787	-0.786	-1.188
2.5	(LOWER)	0.578	0.420	0.358	0.294	0.129
5.0		0.618	0.428	0.417	0.437	0.300
10.0		0.443	0.480	0.458	0.421	0.293
24.0		0.342	0.342	0.389	0.358	0.148
33.0		0.301	0.355	0.367	0.393	-0.154
54.0		0.319	0.446	0.490	0.388	-0.421
73.5		0.610	0.770	0.675	0.188	0.001
84.0		0.887	0.461	-5.415	0.275	0.258
96.0		0.687	-0.017	0.565	0.434	-0.048

RUN 351 POINT 3 ALPHA 8.01 PSI -5.01 HEIGHT 87.03

X/C, %		BP 2	BP 6	BP 12	BP 16	BP 22
0.0	(UPPER)	-3.551	-4.748	-3.502	-2.888	-2.425
2.5		-1.904	-4.578	-3.585	-2.978	-2.413
5.0		-1.436	-2.873	-3.382	-3.042	-2.450
10.0		-1.198	-1.198	-3.041	-3.208	-2.443
15.0		-1.082	-1.078	-2.957	-3.266	-2.485
24.0		-0.926	-1.055	-1.342	-2.886	-2.595
33.0		-0.840	-0.988	-0.985	-1.634	-2.838
54.0		-1.078	-1.200	-1.218	2.387	-3.088
65.0		-0.120	-1.943	-1.814	-1.812	-3.823
78.5		-0.117	-4.844	-5.432	-5.873	-6.464
79.5		-68.217	-51.436	-53.230	-60.718	-45.280
80.5		-7.308	-8.019	-7.826	-15.255	-0.067
81.5		-3.902	0.458	-5.884	-7.778	-12.522
82.0		-0.353	-3.947	0.231	-8.131	-8.916
84.0		-5.405	-4.626	-5.517	-4.854	-7.512
87.0		-0.458	-4.187	-3.546	-3.932	-5.211
88.0		-1.383	-2.431	-4.267	-4.574	-3.727
93.0		-1.292	-1.466	-1.338	-3.191	-0.105
96.0		-1.824	-1.444	-0.462	-1.844	-4.890
100.0		-0.585	-0.609	-0.823	-0.781	-1.192
2.5	(LOWER)	0.583	0.415	0.349	0.291	0.118
5.0		0.610	0.413	0.390	0.410	0.291
10.0		0.414	0.485	0.437	0.400	0.276
24.0		0.316	0.368	0.389	0.336	0.125
33.0		0.280	0.332	0.341	0.363	-0.180
54.0		0.295	0.420	0.438	0.343	-0.470
73.5		0.586	0.747	0.661	0.161	-0.008
84.0		0.686	0.456	-5.483	0.388	0.234
96.0		0.646	0.037	0.556	0.473	-0.050

WING PRESSURE COEFFICIENTS

RUN 352 POINT 1 ALPHA 8.04 PSI 0.00 HEIGHT 46.35

X/C, %		BP 2	BP 6	BP 12	BP 16	BP 22
0.0	(UPPER)	-3.206	-4.000	-3.005	-3.906	-2.435
2.5		-1.818	-4.571	-3.537	-3.467	-2.417
5.0		-1.306	-2.204	-3.440	-3.160	-2.443
10.0		-1.188	-1.223	-2.976	-3.246	-2.443
15.0		-1.046	-1.101	-2.400	-3.262	-2.444
24.0		-0.811	-1.055	-1.416	-2.878	-2.461
33.0		-0.822	-0.941	-1.055	-1.874	-2.556
54.0		-1.123	-1.134	-1.176	2.333	-3.085
65.0		-0.068	-1.720	-1.737	-1.872	-2.884
78.5		-0.046	-4.563	-5.131	-5.957	-6.366
79.5		-66.347	-46.453	-48.718	-58.083	-44.406
80.5		-7.747	-8.212	-7.006	-14.011	-0.020
81.5		-3.743	0.391	-5.542	-7.500	-12.243
82.0		-0.112	-3.647	0.408	-5.805	-8.783
84.0		-5.218	-4.391	-5.257	-4.871	-7.363
87.0		-0.321	-3.083	-3.256	-3.318	-5.093
88.0		-1.282	-2.255	-4.030	-4.445	-3.020
93.0		-1.106	-1.327	-1.242	-3.110	-0.030
96.0		-1.588	-1.213	-0.406	-1.583	-4.819
100.0		-0.617	-0.584	-0.741	-0.768	-1.035
2.5	(LOWER)	0.580	0.493	0.453	0.385	0.234
5.0		0.816	0.470	0.484	0.511	0.384
10.0		0.447	0.530	0.510	0.481	0.361
24.0		0.368	0.305	0.426	0.403	0.211
33.0		0.330	0.278	0.403	0.435	-0.106
54.0		0.362	0.471	0.482	0.417	-0.472
73.5		0.874	0.766	0.676	0.120	0.100
84.0		0.738	0.495	5.395	0.281	0.136
96.0		0.594	-0.104	0.608	0.534	0.094

RUN 352 POINT 2 ALPHA 8.01 PSI 0.00 HEIGHT 86.73

X/C, %		BP 2	BP 6	BP 12	BP 16	BP 22
0.0	(UPPER)	-2.863	-4.786	-4.027	-3.007	-2.517
2.5		-1.741	-3.817	-3.387	-3.487	-2.490
5.0		-1.357	-1.583	-3.187	-3.472	-2.511
10.0		-1.167	-1.355	-2.405	-3.575	-2.506
15.0		-1.035	-1.153	-1.906	-3.267	-2.497
24.0		-0.912	-1.000	-1.334	-1.867	-2.504
33.0		-0.847	-0.905	-1.222	-1.066	-2.562
54.0		-1.145	-1.186	-1.323	2.335	-2.810
65.0		-0.120	-1.782	-1.874	-1.910	-3.279
78.5		-0.131	-4.703	-5.243	-5.910	-6.367
79.5		-66.361	-46.182	-46.704	-60.385	-46.042
80.5		-7.982	-8.448	-7.791	-15.412	-0.113
81.5		-3.940	0.330	-5.951	-7.777	-12.426
82.0		0.227	-3.828	0.360	-6.006	-8.809
84.0		-5.300	-4.512	-5.325	-4.825	-7.151
87.0		-0.466	-4.111	-3.414	-3.480	-4.815
88.0		-1.410	2.368	-4.106	-4.901	-3.531
93.0		-1.268	-1.431	-1.307	-3.221	-0.107
96.0		-1.080	-1.405	-0.477	-1.850	-5.630
100.0		-0.717	-0.863	-0.808	-0.705	-1.005
2.5	(LOWER)	0.553	0.485	0.456	0.381	0.250
5.0		0.586	0.423	0.480	0.485	0.382
10.0		0.398	0.497	0.467	0.445	0.336
24.0		0.307	0.314	0.378	0.353	0.171
33.0		0.273	0.334	0.352	0.380	-0.182
54.0		0.314	0.417	0.454	0.377	-0.498
73.5		0.649	0.739	0.652	0.115	0.080
84.0		0.714	0.384	5.472	0.225	0.082
96.0		0.548	-0.136	0.583	0.530	0.025

RUN 352 POINT 3 ALPHA 8.02 PSI 0.00 HEIGHT 86.62

X/C, %		BP 2	BP 6	BP 12	BP 16	BP 22
0.0	(UPPER)	-2.876	-4.730	-3.783	-3.108	-2.458
2.5		-1.751	-4.181	-3.386	-3.270	-2.432
5.0		-1.356	-1.550	-3.280	-3.278	-2.458
10.0		-1.158	-1.310	-2.819	-3.400	-2.456
15.0		-1.018	-1.124	-2.078	-3.264	-2.447
24.0		-0.896	-1.038	-1.342	-2.185	-2.456
33.0		-0.822	-0.954	-1.183	-1.229	-2.525
54.0		-1.124	-1.162	-1.264	2.327	-2.870
65.0		-0.112	-1.745	-1.800	-1.814	-3.515
78.5		-0.103	-4.823	-5.148	-5.746	-6.302
79.5		-67.508	-48.500	-48.584	-58.179	-45.176
80.5		-7.794	-8.344	-7.054	-15.110	-0.110
81.5		-3.637	0.352	-5.539	-7.610	-12.296
82.0		-0.211	-3.763	0.408	-5.861	-8.505
84.0		-5.335	-4.435	5.256	-4.880	-7.183
87.0		-0.417	-4.028	-3.361	-3.373	-4.865
88.0		-1.308	-2.323	-4.052	-4.503	-3.540
93.0		-1.248	-1.380	-1.278	-3.186	-0.080
96.0		-1.819	-1.358	-0.448	-1.607	-4.831
100.0		-0.680	-0.814	-0.779	-0.707	-1.031
2.5	(LOWER)	0.555	0.488	0.454	0.393	0.258
5.0		0.586	0.440	0.465	0.504	0.385
10.0		0.421	0.518	0.490	0.486	0.351
24.0		0.338	0.337	0.405	0.378	0.183
33.0		0.292	0.351	0.370	0.411	-0.157
54.0		0.333	0.434	0.471	0.388	-0.482
73.5		0.857	0.754	0.862	0.121	0.086
84.0		0.717	0.400	-5.410	0.250	0.115
96.0		0.583	-0.118	0.580	0.546	0.042

RUN 353 POINT 1 ALPHA 8.01 PSI 0.00 HEIGHT 10.88

X/C, %		BP 2	BP 6	BP 12	BP 16	BP 22
0.0	(UPPER)	-0.232	-1.070	-2.510	-3.371	-2.100
2.5		-0.861	-0.910	-1.405	-2.275	-1.750
5.0		-0.544	-0.822	-1.140	-1.383	-1.710
10.0		0.534	-0.710	-0.927	-1.004	-1.644
15.0		0.481	-0.611	-0.846	-0.956	-1.561
24.0		-0.484	-0.626	-0.757	-0.831	-1.175
33.0		-0.473	-0.585	-0.706	-0.706	-0.910
54.0		-1.100	-0.830	0.835	2.283	-1.101
65.0		0.037	-1.347	-1.440	-1.504	-1.773
78.5		0.035	-3.887	-4.407	-5.01[illegible]	-5.428
79.5		-56.488	-41.578	-44.401	-51.182	-42.889
80.5		-8.407	-6.366	-7.329	-13.095	0.072
81.5		-2.867	0.267	-4.587	-6.830	-8.816
82.0		0.795	-2.886	0.542	-4.906	-6.087
84.0		-4.376	-3.525	-4.431	-3.822	-4.744
87.0		0.342	-3.218	-2.872	-2.848	-3.247
88.0		-0.583	-1.587	-3.340	-3.723	-2.082
93.0		-0.495	-0.784	-0.884	-2.501	0.083
96.0		-0.881	-0.783	0.087	-1.044	-4.145
100.0		-0.729	-0.727	-0.926	-0.884	-1.227
2.5	(LOWER)	0.421	0.477	0.515	0.494	0.380
5.0		0.446	0.363	0.441	0.493	0.298
10.0		0.325	0.410	0.437	0.416	0.300
24.0		0.335	0.335	0.370	0.336	0.150
33.0		0.320	0.300	0.363	0.370	-0.010
54.0		0.383	0.404	0.452	0.342	-0.538
73.5		0.868	0.734	0.834	0.080	0.224
84.0		0.753	0.300	-4.301	0.170	0.033
96.0		0.630	-0.170	0.526	0.485	-0.033

WING PRESSURE COEFFICIENTS

RUN 353 POINT 2 ALPHA -0.02 PSI 0.00 HEIGHT 32.00

X/C, %		BP 2	BP 6	BP 12	BP 16	BP 22
0.0	(UPPER)	-0.000	-0.731	-1.869	-2.863	-3.482
2.5		-0.605	-1.029	-1.317	-1.838	-3.044
5.0		-0.558	-0.807	-1.081	-1.291	-1.795
10.0		-0.543	-0.763	-0.966	-1.087	-1.153
15.0		-0.535	-0.620	-0.860	-0.871	-1.026
24.0		-0.518	-0.867	-0.781	-0.882	-0.901
33.0		-0.518	-0.848	-0.829	-0.843	-0.878
54.0		-1.188	-0.832	-1.038	2.260	-1.300
65.0		-0.000	-1.510	-1.595	-1.743	-1.848
78.5		-0.001	-4.183	-4.857	-5.388	-5.880
79.5		-54.114	-46.357	-47.779	-54.858	-44.525
80.5		-7.863	-7.481	-7.820	-14.553	0.007
81.5		-3.608	0.270	-5.104	-7.103	-10.472
82.0		0.078	-3.295	0.686	-5.422	-6.486
84.0		-5.108	-4.105	-4.868	-4.171	-5.076
87.0		-0.208	-3.738	-3.071	-2.980	-3.415
89.0		-1.129	-2.052	-3.757	-4.080	-2.255
93.0		-0.874	-1.135	-0.884	-2.804	0.020
96.0		-1.363	-1.102	-0.186	-1.280	-4.181
100.0		-0.880	-0.588	-0.662	-0.880	-1.005
2.5	(LOWER)	0.386	0.403	0.477	0.480	0.397
5.0		0.350	0.271	0.370	0.440	0.381
10.0		0.231	0.338	0.349	0.358	0.293
24.0		0.231	0.243	0.304	0.288	0.187
33.0		0.224	0.281	0.317	0.350	-0.055
54.0		0.326	0.435	0.472	0.368	-0.559
73.5		0.622	0.683	0.620	0.045	0.181
84.0		0.688	0.278	-4.364	0.148	-0.011
96.0		0.578	-0.160	0.637	0.421	-0.068

RUN 353 POINT 3 ALPHA -0.04 PSI 0.00 HEIGHT 65.68

X/C, %		BP 2	BP 6	BP 12	BP 16	BP 22
0.0	(UPPER)	0.048	-0.428	-1.310	-1.927	-2.832
2.5		-0.538	-0.815	-1.504	-1.424	-1.982
5.0		-0.550	-0.781	-1.013	-1.188	-1.450
10.0		-0.565	-0.710	-0.895	-1.044	-1.182
15.0		-0.551	-0.828	-0.848	-0.952	-1.029
24.0		-0.531	-0.678	-0.796	-0.872	-0.827
33.0		-0.548	-0.870	-0.858	-0.857	-0.818
54.0		-1.191	-0.881	-1.084	2.258	-1.318
65.0		-0.135	-1.582	-1.688	-1.786	-1.895
78.5		-0.133	-4.385	-5.032	-5.524	-5.876
79.5		-67.435	-48.447	-49.018	-55.847	-44.305
80.5		-7.848	-8.081	-7.622	-14.735	-0.108
81.5		-3.873	0.240	-5.350	-7.234	-10.268
82.0		-0.201	-3.518	0.532	-5.562	-6.223
84.0		-5.323	-4.326	-5.020	-4.343	-4.917
87.0		-0.353	-3.906	-3.199	-3.042	-3.410
89.0		-1.322	-2.208	-3.893	-4.188	-2.200
93.0		-1.753	-1.268	-1.092	-2.884	-0.133
96.0		-1.533	-1.215	-0.267	-1.354	-4.152
100.0		-0.810	-0.663	-0.763	-0.725	-1.152
2.5	(LOWER)	0.250	0.321	0.407	0.439	0.376
5.0		0.266	0.178	0.291	0.366	0.332
10.0		0.142	0.245	0.265	0.277	0.218
24.0		0.143	0.152	0.213	0.208	0.103
33.0		0.126	0.194	0.234	0.281	-0.174
54.0		0.246	0.361	0.404	0.349	-0.557
73.5		0.555	0.630	0.614	0.056	0.212
84.0		0.872	0.248	-4.322	0.122	-0.037
96.0		0.508	-0.062	0.597	0.389	-0.095

WING PRESSURE COEFFICIENTS

RUN 353 POINT 4 ALPHA -0.06 PSI 0.00 HEIGHT 87.00

X/C, %		BP 2	BP 6	BP 12	BP 16	BP 22
0.0	(UPPER)	0.002	-0.347	-1.151	-1.741	-2.050
2.5		-0.660	-0.877	-1.547	-1.383	-2.038
5.0		-0.523	-0.750	-0.973	-1.161	-1.383
10.0		-0.554	-0.887	-0.886	-1.021	-1.130
15.0		-0.530	-0.826	-0.823	-0.932	-1.018
24.0		-0.521	-0.886	-0.781	-0.857	-0.811
33.0		-0.534	-0.868	-0.845	-0.847	-0.905
54.0		-1.186	-0.873	-1.075	2.288	-1.302
65.0		-0.132	-1.573	-1.681	-1.789	-1.880
78.5		-0.133	-4.378	-5.023	-5.518	-5.840
79.5		-67.683	-48.542	-48.010	-58.013	-44.220
80.5		-7.956	-8.066	-7.826	-14.868	-0.175
81.5		-3.886	0.244	-5.328	-7.238	-10.213
82.0		-0.187	-3.544	0.550	-5.551	-6.224
84.0		-5.331	-4.328	-5.018	-4.310	-4.873
87.0		-0.360	-3.934	-3.188	-3.016	-3.380
89.0		-1.322	-2.204	-3.882	-4.173	-2.173
93.0		-1.150	-1.266	-1.089	-3.077	-0.127
96.0		-1.531	-1.218	-0.256	-1.368	-4.133
100.0		-0.832	-0.670	-0.802	-0.733	-1.148
2.5	(LOWER)	0.238	0.306	0.390	0.431	0.370
5.0		0.218	0.168	0.273	0.352	0.325
10.0		0.138	0.235	0.347	0.268	0.218
24.0		0.128	0.145	0.204	0.201	0.088
33.0		0.123	0.185	0.221	0.274	-0.174
54.0		0.243	0.361	0.399	0.342	-0.565
73.5		0.544	0.630	0.618	0.073	0.218
84.0		0.882	0.242	-4.294	0.114	-0.044
96.0		0.506	0.074	0.587	0.381	-0.107

RUN 354 POINT 1 ALPHA -0.01 PSI 0.00 HEIGHT 20.00

X/C, %		BP 2	BP 6	BP 12	BP 16	BP 22
0.0	(UPPER)	0.002	-0.685	-1.848	-2.805	-3.159
2.5		-0.572	-0.747	-1.268	-1.564	-2.677
5.0		-0.466	-0.872	-0.954	-1.174	-2.110
10.0		-0.459	-0.807	-0.787	-0.956	-1.033
15.0		-0.432	-0.539	-0.718	-0.835	-0.828
24.0		-0.420	-0.514	-0.640	-0.738	-0.718
33.0		-0.425	-0.523	-0.681	-0.707	-0.867
54.0		-0.518	-0.718	-0.848	1.574	1.048
65.0		0.137	-1.153	-1.281	-1.431	-1.648
78.5		0.130	-3.250	-3.877	-4.388	-4.878
79.5		-48.245	-40.118	-38.760	-44.335	-28.863
80.5		-3.538	-8.823	-4.430	-10.313	0.148
81.5		-2.643	0.558	3.026	-5.118	-7.744
82.0		-0.681	-2.637	-0.182	-4.175	-5.482
84.0		-3.020	-2.760	-3.317	-3.262	-4.362
87.0		-0.298	-2.287	-2.203	-2.318	-3.184
89.0		-0.864	-1.300	-2.406	-2.762	-2.458
93.0		-0.532	-0.874	-0.748	-1.860	0.139
96.0		-0.817	-0.567	-0.176	-0.921	-3.146
100.0		-0.013	0.123	-0.045	0.092	-0.517
2.5	(LOWER)	0.444	0.500	0.549	0.544	0.484
5.0		0.413	0.388	0.471	0.513	0.468
10.0		0.357	0.437	0.446	0.453	0.380
24.0		0.350	0.371	0.407	0.390	0.250
33.0		0.380	0.407	0.427	0.440	0.118
54.0		0.486	0.541	0.571	0.511	0.170
73.5		0.689	0.755	0.670	0.486	0.156
84.0		0.774	0.568	-3.457	0.553	0.439
96.0		0.740	0.511	0.754	0.667	0.402

WING PRESSURE COEFFICIENTS

RUN 354 POINT 2 ALPHA -0.05 PSI 0.00 HEIGHT 32.87

X/C, %		BP 2	BP 6	BP 12	BP 16	BP 22
0.0	(UPPER)	0.102	-0.434	-1.383	-2.060	-2.887
2.5		-0.558	-0.857	-1.103	-1.422	-1.858
5.0		-0.474	-0.658	-0.909	-1.108	-1.344
10.0		-0.477	-0.814	-0.786	-0.837	-1.046
15.0		-0.448	-0.548	-0.728	-0.835	-0.888
24.0		-0.459	-0.545	-0.683	-0.757	-0.787
33.0		-0.481	-0.554	-0.687	-0.734	-0.774
54.0		-0.543	-0.783	-0.908	1.572	-1.084
65.0		0.028	-1.261	-1.389	-1.514	-1.719
78.5		0.026	-3.570	-4.140	-4.582	-4.961
79.5		-51.918	-43.688	-42.317	-45.838	-28.047
80.5		-3.541	-7.372	-4.776	-10.647	0.031
81.5		-3.203	0.546	-4.148	-5.322	-7.733
82.0		-1.096	-3.028	-0.402	-4.368	-5.431
84.0		-3.464	-3.099	-3.576	-3.460	-4.297
87.0		-0.855	-2.591	-2.446	-2.508	-3.158
89.0		-0.998	-1.569	-2.629	-2.940	-2.435
93.0		-0.826	-0.899	-0.931	-2.004	0.028
96.0		-1.060	-0.753	-0.335	-1.036	-3.141
100.0		-0.131	0.113	0.158	0.081	-0.551
2.5	(LOWER)	0.366	0.430	0.505	0.514	0.474
5.0		0.351	0.305	0.404	0.456	0.424
10.0		0.271	0.381	0.360	0.382	0.324
24.0		0.250	0.271	0.320	0.311	0.202
33.0		0.271	0.318	0.346	0.368	0.012
54.0		0.401	0.466	0.510	0.457	0.159
73.5		0.638	0.692	0.655	0.481	0.143
84.0		0.768	0.560	-3.447	0.544	0.427
96.0		0.642	0.502	0.749	0.657	0.388

RUN 354 POINT 3 ALPHA -0.08 PSI 0.00 HEIGHT 65.87

X/C, %		BP 2	BP 6	BP 12	BP 16	BP 22
0.0	(UPPER)	0.222	-0.182	-0.886	-1.422	-2.252
2.5		-0.501	-0.744	-1.243	-1.210	-1.444
5.0		-0.441	-0.644	-0.828	-1.000	-1.208
10.0		-0.452	-0.572	-0.759	-0.877	-0.964
15.0		-0.450	-0.528	-0.691	-0.797	-0.839
24.0		-0.445	-0.543	-0.650	-0.737	-0.763
33.0		-0.461	-0.552	-0.683	-0.723	0.755
54.0		-0.540	-0.798	-0.921	1.568	-1.073
65.0		-0.037	-1.288	-1.407	-1.521	-1.698
78.5		-0.045	-3.659	-4.203	-4.585	-4.855
79.5		-53.013	-84.732	-43.056	-48.106	-28.551
80.5		-3.667	-7.442	-4.807	-10.648	-0.034
81.5		-3.400	0.561	-4.203	-5.350	-7.508
82.0		-1.262	-3.135	-0.460	-4.387	-5.251
84.0		-3.808	-3.105	-3.636	-3.490	-4.142
87.0		-0.788	-2.693	-2.510	-2.526	-3.027
89.0		-1.121	-1.654	-2.687	-2.988	-2.338
93.0		-0.846	-0.872	-0.986	-2.032	-0.023
96.0		-1.155	-0.818	-0.388	-1.083	-3.071
100.0		-0.253	0.120	0.125	0.090	-0.568
2.5	(LOWER)	0.297	0.353	0.442	0.474	0.453
5.0		0.268	0.237	0.348	0.396	0.378
10.0		0.203	0.282	0.294	0.320	0.272
24.0		0.178	0.205	0.253	0.253	0.183
33.0		0.207	0.250	0.294	0.313	-0.054
54.0		0.346	0.415	0.461	0.419	0.169
73.5		0.590	0.646	0.650	0.489	0.153
84.0		0.769	0.552	-3.356	0.549	0.434
96.0		0.591	0.508	0.747	0.681	0.396

WING PRESSURE COEFFICIENTS

RUN 354 POINT 4 ALPHA 0.00 PSI 0.00 HEIGHT 87.08

X/C, %		BP 2	BP 6	BP 12	BP 16	BP 22
0.0	(UPPER)	0.235	-0.150	-0.827	-1.356	-2.190
2.5		-0.508	-0.744	-1.212	-1.206	-1.452
5.0		-0.450	-0.647	-0.824	-1.006	-1.223
10.0		-0.475	-0.590	-0.784	-0.880	-0.878
15.0		-0.488	-0.542	-0.704	-0.813	-0.859
24.0		-0.483	-0.560	-0.665	-0.756	-0.783
33.0		-0.473	-0.570	-0.703	-0.743	-0.777
54.0		-0.554	-0.820	-0.942	1.574	-1.085
65.0		-0.055	-1.314	-1.438	-1.552	-1.728
78.5		-0.058	-3.714	-4.284	-4.852	-4.911
79.5		-53.533	-45.313	-43.788	-46.687	-28.787
80.5		-3.713	-7.458	-5.006	-10.704	-0.043
81.5		-3.474	0.570	-4.231	-5.383	-7.583
82.0		-1.322	-3.186	-0.489	-4.449	-5.303
84.0		-3.845	-3.265	-3.681	-3.536	-4.184
87.0		-0.808	-2.718	-2.541	-2.556	-3.059
89.0		-1.154	-1.687	-2.722	-3.010	-2.378
93.0		-0.976	-0.989	-1.017	-2.064	-0.051
96.0		-1.186	-0.843	-0.412	-1.089	-3.108
100.0		-0.267	0.124	0.110	0.088	-0.586
2.5	(LOWER)	0.281	0.335	0.423	0.458	0.449
5.0		0.242	0.218	0.328	0.380	0.385
10.0		0.185	0.273	0.277	0.304	0.257
24.0		0.162	0.192	0.237	0.236	0.149
33.0		0.181	0.238	0.274	0.300	-0.071
54.0		0.335	0.405	0.449	0.408	0.169
73.5		0.583	0.638	0.647	0.491	0.155
84.0		0.773	0.569	-3.392	0.554	0.440
96.0		0.586	0.513	0.753	0.667	0.403

RUN 355 POINT 1 ALPHA 8.02 PSI 0.00 HEIGHT 48.41

X/C, %		BP 2	BP 6	BP 12	BP 16	BP 22
0.0	(UPPER)	-2.781	-5.072	-5.078	-4.123	-2.424
2.5		-1.843	-2.302	-2.824	-4.250	-2.404
5.0		-1.233	-1.680	-2.280	-4.524	-2.407
10.0		-1.040	-1.294	-1.817	-4.028	-2.423
15.0		-0.927	-1.112	-1.523	-1.738	-2.398
24.0		-0.811	-0.985	-1.233	-0.893	-2.555
33.0		-0.738	-0.871	-1.140	-0.895	-2.695
54.0		-0.856	-0.986	-1.208	1.589	-2.225
65.0		0.005	-1.459	-1.618	-1.704	-2.112
78.5		-0.001	-3.736	-4.227	-5.010	-5.152
79.5		-52.541	-44.250	-38.326	-48.047	-32.881
80.5		-3.487	-7.475	-4.524	-11.049	0.007
81.5		-3.248	0.565	-4.217	-5.742	-8.420
82.0		-1.128	-3.185	-0.476	-4.793	-7.088
84.0		-3.507	-3.244	-3.688	-3.891	-5.761
87.0		-0.707	-2.701	-2.559	-2.867	-4.255
89.0		-1.053	-1.657	-2.739	-3.291	-3.322
93.0		-0.913	-0.987	-1.081	-2.283	0.023
96.0		-1.144	-0.852	-0.500	-1.283	-3.638
100.0		-0.145	0.127	-0.157	0.094	-0.512
2.5	(LOWER)	0.644	0.587	0.482	0.422	0.354
5.0		0.608	0.525	0.558	0.582	0.484
10.0		0.509	0.581	0.550	0.548	0.422
24.0		0.401	0.424	0.457	0.438	0.270
33.0		0.389	0.423	0.449	0.462	-0.017
54.0		0.455	0.511	0.544	0.481	0.181
73.5		0.697	0.754	0.683	0.488	0.164
84.0		0.778	0.574	-4.085	0.558	0.444
96.0		0.666	0.515	0.756	0.688	0.403

WING PRESSURE COEFFICIENTS

RUN 355 POINT 2 ALPHA 8.01 PSI 0.00 HEIGHT 85.04

X/C, %		BP 2	BP 6	BP 12	BP 16	BP 22
0.0	(UPPER)	-2.505	-4.848	-6.870	-4.018	-2.390
2.5		-1.815	-2.217	-2.841	-4.101	-2.383
5.0		-1.221	-1.883	-2.284	-4.439	-2.356
10.0		-1.032	-1.311	-1.732	-4.143	-2.367
15.0		-0.819	-1.106	-1.473	-1.744	-2.326
24.0		-0.818	-0.848	-1.219	-0.873	-2.488
33.0		-0.749	-0.876	-1.136	-0.907	-2.622
54.0		-0.693	-1.007	-1.222	1.586	-2.235
85.0		-0.037	-1.486	-1.872	-1.734	-2.139
78.5		-0.042	-2.852	-4.483	-5.087	-5.183
79.5		-53.345	-45.181	-42.133	-49.728	-32.650
80.5		-3.587	-7.473	-4.864	-11.057	-0.045
81.5		-3.380	0.574	-4.411	-5.639	-0.352
82.0		-1.287	-3.284	-0.586	-4.909	-7.032
84.0		-3.587	-3.346	-3.810	-3.998	-5.754
87.0		-0.797	-2.778	-2.689	-2.940	-4.258
89.0		-1.127	-1.720	-2.847	-3.359	-3.338
93.0		-0.970	-1.041	-1.146	-2.339	-0.017
96.0		-1.193	-0.892	-0.535	-1.310	-3.869
100.0		-0.185	0.139	-0.166	0.106	-0.546
2.5	(LOWER)	0.619	0.562	0.459	0.440	0.385
5.0		0.588	0.500	0.550	0.560	0.460
10.0		0.484	0.572	0.531	0.533	0.407
24.0		0.387	0.394	0.436	0.410	0.248
33.0		0.396	0.398	0.426	0.437	-0.051
54.0		0.428	0.484	0.525	0.482	0.184
73.5		0.682	0.743	0.877	0.490	0.171
81.0		0.787	0.585	-4.143	0.567	0.456
96.0		0.639	0.527	0.783	0.680	0.414

RUN 355 POINT 3 ALPHA 7.98 PSI 0.00 HEIGHT 87.00

X/C, %		BP 2	BP 6	BP 12	BP 16	BP 22
0.0	(UPPER)	-2.450	-4.588	-6.811	-3.894	-2.238
2.5		-1.580	-2.145	-2.870	-3.880	-2.199
5.0		-1.183	-1.819	-2.230	-4.049	-2.175
10.0		-1.005	-1.253	-1.659	-3.813	-2.188
15.0		-0.906	-1.080	-1.399	-2.087	-2.104
24.0		-0.794	-0.943	-1.183	-0.889	-2.112
33.0		-0.734	-0.887	-1.093	-0.887	-2.144
54.0		-0.705	-1.005	-1.197	1.571	-2.239
85.0		-0.043	-1.482	-1.858	-1.898	-2.814
78.5		-0.050	-3.861	-4.524	-4.898	-5.693
79.5		-53.439	-45.416	-43.472	-49.399	-30.151
80.5		-3.639	-7.431	-5.108	-10.992	-0.053
81.5		-3.413	0.598	-4.458	-5.787	-0.235
82.0		-1.288	-3.283	-0.828	-4.882	-7.093
84.0		-3.588	-3.348	-3.810	-3.948	-5.880
87.0		-0.804	-2.788	-2.716	-2.918	-4.491
89.0		-1.134	-1.735	-2.885	-3.337	-3.576
93.0		-0.978	-1.044	-1.152	-2.324	-0.029
96.0		-1.203	-0.897	-0.528	-1.298	-3.739
100.0		-0.199	0.149	-0.168	0.119	-0.827
2.5	(LOWER)	0.619	0.556	0.474	0.459	0.384
5.0		0.588	0.485	0.551	0.580	0.455
10.0		0.484	0.559	0.527	0.522	0.388
24.0		0.354	0.378	0.420	0.395	0.218
33.0		0.398	0.384	0.415	0.423	-0.056
54.0		0.417	0.478	0.517	0.450	0.170
73.5		0.687	0.738	0.888	0.498	0.177
84.0		0.798	0.594	-4.275	0.577	0.470
96.0		0.835	0.538	0.771	0.881	0.427

WING PRESSURE COEFFICIENTS

RUN 356 POINT 1 ALPHA 8.02 PSI -5.01 HEIGHT 48.40

X/C, %		BP 2	BP 6	BP 12	BP 16	BP 22
0.0	(UPPER)	-3.491	-5.072	-3.882	-2.867	-2.276
2.5		-1.834	-4.823	-3.488	-2.918	-2.258
5.0		-1.361	-1.450	-3.263	-2.988	-2.275
10.0		-1.118	-1.183	-2.703	-3.178	-2.314
15.0		-0.981	-1.050	-2.197	-3.172	-2.287
24.0		-0.953	-0.927	-1.257	-2.358	-2.370
33.0		-0.788	-0.883	-0.922	-1.239	-2.526
54.0		-0.735	-1.017	-1.071	1.584	-2.800
85.0		-0.013	-1.510	-1.558	-1.595	-3.459
78.5		-0.019	-3.991	-4.496	-4.911	-5.402
79.5		-53.391	-45.459	-48.450	-48.858	-30.558
80.5		-3.573	-7.527	-5.407	-10.997	-0.023
81.5		-3.388	0.586	-4.529	-5.785	-9.491
82.0		-1.282	-3.373	-0.959	-4.884	-7.347
84.0		-3.593	-3.407	-3.844	-3.987	-6.214
87.0		-0.784	-2.801	-2.758	-2.912	-4.684
89.0		-1.059	-1.733	-2.908	-3.309	-3.866
93.0		-0.938	-1.082	-1.145	-2.284	0.009
96.0		-1.156	-0.928	-0.508	-1.278	-3.502
100.0		-0.028	0.147	-0.178	0.116	-0.827
2.5	(LOWER)	0.823	0.493	0.401	0.323	0.203
5.0		0.638	0.515	0.499	0.472	0.353
10.0		0.530	0.558	0.503	0.484	0.341
24.0		0.398	0.417	0.437	0.394	0.207
33.0		0.388	0.423	0.426	0.423	-0.026
54.0		0.422	0.498	0.511	0.447	0.154
73.5		0.658	0.767	0.870	0.488	0.188
84.0		0.797	0.584	-4.175	0.578	0.458
96.0		0.747	0.537	0.778	0.890	0.427

RUN 356 POINT 2 ALPHA 8.06 PSI -5.01 HEIGHT 85.08

X/C, %		BP 2	BP 6	BP 12	BP 16	BP 22
0.0	(UPPER)	-3.250	-5.105	-4.248	-3.345	-2.357
2.5		-1.771	-3.836	-3.085	-3.456	-2.347
5.0		-1.320	-1.424	-2.756	-3.529	-2.372
10.0		-1.081	-1.244	-2.188	-3.821	-2.412
15.0		-0.990	-1.078	-1.787	-2.878	-2.381
24.0		-0.847	-0.948	-1.263	-1.383	-2.497
33.0		-0.770	-0.881	-1.087	-0.817	-2.576
54.0		-0.738	-1.043	-1.173	1.572	-2.426
85.0		-0.044	-1.584	-1.818	-1.737	-2.827
78.5		-0.050	-4.000	-4.408	-5.072	-5.421
79.5		-54.005	-46.450	-44.477	-49.236	-32.824
80.5		-3.688	-7.499	-5.048	-11.992	-0.052
81.5		-3.476	0.586	-4.449	-5.813	-0.875
82.0		-1.347	-3.414	-0.818	-4.884	-7.390
84.0		-3.844	-3.387	-3.806	-4.014	-6.106
87.0		-0.829	-2.831	-2.713	-2.950	-4.538
89.0		-1.115	-1.789	-2.888	-3.338	-3.588
93.0		-0.973	-1.092	-1.156	-2.308	-0.034
96.0		-1.178	-0.941	-0.544	-1.294	-3.850
100.0		-0.088	0.184	-0.208	0.128	-0.803
2.5	(LOWER)	0.820	0.485	0.397	0.322	0.227
5.0		0.610	0.481	0.492	0.471	0.363
10.0		0.508	0.545	0.490	0.477	0.339
24.0		0.370	0.393	0.415	0.379	0.195
33.0		0.386	0.395	0.406	0.408	-0.058
54.0		0.407	0.477	0.503	0.435	0.150
73.5		0.658	0.754	0.858	0.498	0.173
84.0		0.813	0.610	-4.255	0.592	0.473
96.0		0.733	0.552	0.871	0.705	0.444

WING PRESSURE COEFFICIENTS

RUN 356 POINT 3 ALPHA 0.05 PSI -5.01 HEIGHT 87.21

X/C, %		BP 2	BP 6	BP 12	BP 16	BP 22
0.0	(UPPER)	-3.181	-5.445	-4.833	-3.780	-2.441
2.5		-1.762	-2.461	-2.938	-3.003	-2.430
5.0		-1.311	-1.678	-2.530	-4.084	-2.482
10.0		-1.007	-1.320	-1.945	-3.836	-2.500
15.0		-0.972	-1.142	-1.826	-2.247	-2.483
24.0		-0.839	-0.990	-1.274	-1.133	-2.027
33.0		-0.770	-0.924	-1.158	-0.932	-2.008
54.0		-0.750	-1.055	-1.232	1.588	-2.199
65.0		-0.056	-1.573	-1.672	-1.800	-2.471
78.5		-0.082	-4.036	-4.430	-5.227	-5.487
79.5		-54.387	-47.078	-43.803	-50.163	-34.344
80.5		-3.719	-7.518	-4.937	-11.187	-0.071
81.5		-3.521	0.815	-4.498	-5.906	-9.831
82.0		-1.378	-3.448	-0.807	-4.856	-7.453
84.0		-3.888	-3.381	-3.808	-4.083	-6.072
87.0		-0.841	-2.872	-2.718	-3.028	-4.505
89.0		-1.143	-1.789	-2.868	-3.397	-3.541
93.0		-0.998	-1.103	-1.175	-2.350	-6.038
96.0		-1.200	-0.953	-0.562	-1.323	-3.715
100.0		-0.094	0.185	-0.218	0.151	-0.808
2.5	(LOWER)	0.509	0.490	0.381	0.312	0.230
5.0		0.590	0.482	0.471	0.466	0.363
10.0		0.494	0.539	0.477	0.470	0.334
24.0		0.357	0.384	0.407	0.388	0.187
33.0		0.338	0.383	0.399	0.394	-0.008
54.0		0.398	0.487	0.492	0.428	0.188
73.5		0.654	0.737	0.848	0.502	0.183
84.0		0.837	0.835	-4.282	0.816	-0.114
98.0		0.729	0.577	0.868	0.734	0.488

RUN 357 POINT 1 ALPHA 0.01 PSI -5.01 HEIGHT 20.21

X/C, %		BP 2	BP 6	BP 12	BP 16	BP 22
0.0	(UPPER)	-0.283	-1.092	-2.384	-3.100	-1.827
2.5		-0.676	-0.858	-1.342	-2.101	-1.578
5.0		-0.492	-0.713	-0.877	-1.205	-1.524
10.0		-0.473	-0.598	-0.809	-0.952	-1.494
15.0		-0.441	-0.531	-0.704	-0.834	-1.383
24.0		-0.442	-0.523	-0.627	-0.740	-1.043
33.0		-0.427	-0.517	-0.648	-0.700	-0.798
54.0		-0.747	-0.724	-0.854	1.575	-1.019
65.0		0.127	-1.175	-1.293	-1.431	-1.558
78.5		0.124	-3.205	-3.924	-4.415	-4.751
79.5		-49.142	-41.182	-40.874	-45.171	-28.202
80.5		-3.283	-7.022	-4.415	-10.448	0.113
81.5		-2.721	0.592	-3.934	-5.143	-7.772
82.0		-0.717	-2.867	-0.197	-4.188	-5.508
84.0		-3.009	-3.028	-3.222	-3.344	-4.359
87.0		-0.248	-2.318	-2.227	-2.364	-3.108
89.0		-0.627	-1.307	-2.424	-2.788	-2.375
93.0		-0.487	-0.688	-0.740	-1.851	-0.149
98.0		-0.745	-0.584	-0.170	-0.918	-3.011
100.0		0.219	0.194	-0.104	0.154	-0.588
2.5	(LOWER)	0.497	0.502	0.505	0.485	0.403
5.0		0.489	0.419	0.470	0.478	0.407
10.0		0.407	0.462	0.441	0.444	0.334
24.0		0.375	0.389	0.408	0.373	0.218
33.0		0.409	0.417	0.424	0.420	0.118
54.0		0.502	0.536	0.541	0.474	0.181
73.5		0.873	0.782	0.887	0.483	0.175
84.0		0.834	0.839	-3.357	0.817	-0.107
98.0		0.792	0.583	0.887	0.733	0.478

WING PRESSURE COEFFICIENTS

RUN 357 POINT 2 ALPHA -0.03 PSI -5.01 HEIGHT 32.81

X/C, %		BP 2	BP 6	BP 12	BP 16	BP 22
0.0	(UPPER)	-0.150	-0.807	-1.811	-2.594	-2.885
2.5		-0.845	-0.778	-1.210	-1.525	-2.537
5.0		-0.485	-0.701	-0.939	-1.150	-2.118
10.0		-0.486	-0.800	-0.795	-0.953	-1.052
15.0		-0.458	-0.551	-0.714	-0.846	-0.819
24.0		-0.471	-0.542	-0.651	-0.771	-0.742
33.0		-0.482	-0.552	-0.681	-0.737	-0.728
54.0		-0.744	-0.782	-0.918	1.578	-1.077
65.0		0.027	-1.282	-1.404	-1.522	-1.889
78.5		0.023	-3.630	-4.211	-4.638	-5.032
79.5		-52.868	-44.885	-43.722	-47.125	-29.570
80.5		-3.400	-7.443	-4.861	-10.747	0.020
81.5		-3.315	0.588	-4.218	-5.383	-8.060
82.0		-1.117	-3.078	-0.408	-4.420	-5.720
84.0		-3.442	-3.088	-3.503	-3.542	-4.477
87.0		-0.819	-2.844	-2.488	-2.583	-3.217
89.0		-0.952	-1.591	-2.658	-2.995	-2.487
93.0		-0.788	-0.917	-0.943	-2.008	0.058
98.0		-1.009	-0.777	-0.338	-1.047	-3.123
100.0		-0.078	0.198	-0.143	-0.103	-0.538
2.5	(LOWER)	0.427	0.444	0.467	0.448	0.403
5.0		0.392	0.338	0.404	0.429	0.388
10.0		0.325	0.391	0.344	0.378	0.295
24.0		0.277	0.297	0.327	0.301	0.174
33.0		0.311	0.328	0.350	0.359	0.022
54.0		0.415	0.481	0.505	0.439	0.181
73.5		0.868	0.702	0.814	0.482	0.174
84.0		0.838	0.844	-3.438	0.823	-0.101
98.0		0.745	0.585	0.888	0.738	0.474

RUN 357 POINT 3 ALPHA -0.05 PSI -5.01 HEIGHT 05.84

X/C, %		BP 2	BP 6	BP 12	BP 16	BP 22
0.0	(UPPER)	-0.002	-0.525	-1.318	-1.957	-2.881
2.5		-0.509	-0.874	-1.043	-1.345	-1.814
5.0		-0.495	-0.681	-0.883	-1.050	-1.283
10.0		-0.477	-0.583	-0.779	-0.912	-1.033
15.0		-0.472	-0.552	-0.706	-0.823	-0.876
24.0		-0.481	-0.582	-0.658	-0.780	-0.788
33.0		-0.478	-0.577	-0.688	-0.744	-0.774
54.0		-0.728	-0.825	-0.947	1.577	-1.098
65.0		-0.048	-1.345	-1.450	-1.580	-1.724
78.5		-0.053	-3.788	-4.328	-4.722	-5.128
79.5		-54.146	-46.139	-44.864	-47.678	-29.779
80.5		-3.823	-7.517	-5.095	-10.784	-0.057
81.5		-3.507	0.624	-4.317	-5.454	-7.871
82.0		-1.347	-3.242	-0.478	-4.482	-5.624
84.0		-3.828	-3.212	-3.592	-3.668	-4.382
87.0		-0.754	-2.752	-2.579	-2.818	-3.144
89.0		-1.102	-1.704	-2.744	-3.022	-2.454
93.0		-0.888	-1.015	-1.021	-2.080	-0.025
98.0		-1.115	-0.858	-0.498	-1.091	-3.135
100.0		-0.185	0.214	-0.197	-0.108	-0.562
2.5	(LOWER)	0.382	0.381	0.422	0.423	0.391
5.0		0.314	0.284	0.348	0.377	0.347
10.0		0.252	0.322	0.298	0.317	0.248
24.0		0.202	0.227	0.255	0.238	0.135
33.0		0.231	0.257	0.285	0.305	-0.054
54.0		0.351	0.401	0.458	0.406	0.175
73.5		0.808	0.678	0.583	0.495	0.182
84.0		0.851	0.854	-3.438	0.840	-0.082
98.0		0.688	0.600	0.682	0.752	0.488

WING PRESSURE COEFFICIENTS

RUN 357 POINT 4 ALPHA -0.07 PSI -5.01 HEIGHT 87.05

X/C, %		BP 2	BP 6	BP 12	BP 18	BP 22
0.0	(UPPER)	0.021	-0.481	-1.264	-1.878	-2.782
2.5		-0.594	-0.854	-1.025	-1.325	-1.788
5.0		-0.504	-0.855	-0.889	-1.058	-1.293
10.0		-0.487	-0.803	-0.782	-0.918	-1.037
15.0		-0.475	-0.559	-0.707	-0.829	-0.879
24.0		-0.483	-0.587	-0.685	-0.778	-0.793
33.0		-0.490	-0.588	-0.707	-0.755	-0.783
54.0		-0.727	-0.838	-0.983	1.588	-1.112
85.0		-0.057	-1.384	-1.487	-1.579	-1.745
78.5		-0.085	-3.813	-4.368	-4.766	-5.185
79.5		-54.824	-48.558	-45.341	-48.074	-29.897
80.5		-3.718	-7.519	-5.141	-10.870	-0.083
81.5		-3.584	0.618	-4.325	-5.488	-8.022
82.0		-1.389	-3.273	-0.531	-4.515	-5.645
84.0		-3.888	-3.331	-3.634	-3.881	-4.387
87.0		-0.785	-2.790	-2.595	-2.834	-3.177
89.0		-1.130	-1.730	-2.777	-3.053	-2.471
93.0		-0.827	-1.037	-1.042	-2.085	-0.038
96.0		-1.140	-0.881	-0.421	-1.108	-3.157
100.0		-0.215	0.222	-0.209	-0.112	-0.577
2.5	(LOWER)	0.336	0.384	0.407	0.413	0.383
5.0		0.300	0.252	0.336	0.384	0.336
10.0		0.235	0.308	0.280	0.308	0.234
24.0		0.186	0.209	0.240	0.225	0.123
33.0		0.218	0.243	0.273	0.291	-0.068
54.0		0.339	0.390	0.449	0.399	0.177
73.5		0.599	0.673	0.586	0.503	0.184
84.0		0.862	0.669	-3.468	0.851	-0.065
96.0		0.676	0.611	0.679	0.785	0.182

RUN 358 POINT 1 ALPHA -0.01 PSI -5.01 HEIGHT 19.38

X/C, %		BP 2	BP 6	BP 12	BP 18	BP 22
0.0	(UPPER)	0.398	0.211	0.039	-0.048	-0.148
2.5		-0.288	-0.384	-0.494	-0.528	-0.545
5.0		-0.229	-0.318	-0.383	-0.415	-0.434
10.0		-0.241	-0.287	-0.342	-0.372	-0.359
15.0		-0.219	-0.263	-0.301	-0.325	-0.288
24.0		-0.201	-0.235	-0.239	-0.278	-0.243
33.0		-0.173	-0.211	-0.238	-0.232	-0.203
54.0		-0.103	-0.239	-0.246	1.393	-0.229
85.0		0.062	-0.315	-0.349	-0.348	-0.308
78.5		0.057	-0.520	-0.535	-0.547	-0.597
79.5		-0.435	-0.448	-0.512	-0.505	-0.526
80.5		-0.455	-0.480	-0.435	-0.544	0.046
81.5		-0.475	0.713	-0.479	-0.475	-0.826
82.0		-0.478	-0.374	-0.189	-0.498	-0.805
84.0		-0.486	-0.455	-0.324	-0.539	-0.578
87.0		-0.508	-0.447	-0.471	-0.188	-0.579
89.0		-0.493	-0.482	-0.475	-0.521	-0.604
93.0		-0.578	-0.489	-0.497	-0.545	0.082
96.0		-0.590	-0.454	-0.503	-0.533	-0.586
100.0		-0.419	-0.373	-0.456	-0.510	-0.810
2.5	(LOWER)	0.262	0.273	0.293	0.303	0.282
5.0		0.228	0.184	0.226	0.243	0.219
10.0		0.187	0.225	0.191	0.188	0.152
24.0		0.144	0.151	0.167	0.151	0.117
33.0		0.167	0.185	0.197	0.216	0.060
54.0		0.277	0.305	0.350	0.320	0.405
73.5		0.588	0.637	0.587	0.632	0.423
84.0		0.883	0.780	-0.586	0.762	0.368
96.0		0.503	0.725	0.425	0.385	0.282

WING PRESSURE COEFFICIENTS

RUN 358 POINT 2 ALPHA -0.03 PSI -5.01 HEIGHT 32.83

X/C, %		BP 2	BP 6	BP 12	BP 18	BP 22
0.0	(UPPER)	0.435	0.290	0.181	0.106	0.035
2.5		-0.237	-0.321	-0.427	-0.481	-0.480
5.0		-0.212	-0.293	-0.350	-0.372	-0.394
10.0		-0.233	-0.275	-0.321	-0.348	-0.343
15.0		-0.210	-0.249	-0.284	-0.317	-0.282
24.0		-0.187	-0.222	-0.244	-0.278	-0.245
33.0		-0.189	-0.203	-0.232	-0.223	-0.210
54.0		-0.114	-0.242	-0.251	1.392	-0.231
85.0		0.045	-0.321	-0.354	-0.353	-0.310
78.5		0.037	-0.530	-0.551	-0.564	-0.625
79.5		-0.431	-0.447	-0.517	-0.519	-0.668
80.5		-0.448	-0.488	-0.485	-0.564	0.030
81.5		-0.489	0.713	-0.506	-0.506	-0.668
82.0		-0.474	-0.378	-0.184	-0.510	-0.664
84.0		-0.468	-0.482	-0.341	-0.550	-0.817
87.0		-0.480	-0.455	-0.482	-0.518	-0.810
89.0		-0.476	-0.457	-0.486	-0.539	-0.841
93.0		-0.555	-0.482	-0.507	-0.561	0.061
96.0		-0.571	-0.447	-0.512	-0.548	-0.829
100.0		-0.429	-0.378	-0.468	-0.496	-0.819
2.5	(LOWER)	0.212	0.222	0.238	0.248	0.243
5.0		0.188	0.138	0.181	0.192	0.175
10.0		0.150	0.177	0.143	0.155	0.113
24.0		0.099	0.102	0.125	0.111	0.080
33.0		0.122	0.138	0.157	0.182	0.040
54.0		0.240	0.271	0.321	0.298	0.402
73.5		0.583	0.609	0.573	0.622	0.424
84.0		0.807	0.759	-0.651	0.765	0.377
96.0		0.491	0.584	0.400	0.388	0.282

RUN 358 POINT 3 ALPHA -0.05 PSI -5.01 HEIGHT 65.84

X/C, %		BP 2	BP 6	BP 12	BP 18	BP 22
0.0	(UPPER)	0.473	0.352	0.249	0.208	0.188
2.5		-0.217	-0.291	-0.388	-0.406	-0.390
5.0		-0.202	-0.278	-0.329	-0.341	-0.380
10.0		-0.224	-0.265	-0.308	-0.337	-0.335
15.0		-0.218	-0.248	-0.280	-0.311	-0.276
24.0		-0.208	-0.234	-0.245	-0.281	-0.248
33.0		-0.180	-0.222	-0.259	-0.232	-0.230
54.0		-0.122	-0.250	-0.283	1.400	-0.239
85.0		0.025	-0.333	-0.368	-0.367	-0.319
78.5		0.019	-0.551	-0.572	-0.585	-0.651
79.5		-0.440	-0.470	-0.550	-0.548	-0.889
80.5		-0.483	-0.473	-0.487	-0.584	0.002
81.5		-0.483	0.720	-0.515	-0.510	-0.706
82.0		-0.485	-0.398	-0.220	-0.537	-0.673
84.0		-0.489	-0.478	-0.387	-0.584	-0.848
87.0		-0.503	-0.470	-0.590	-0.527	-0.836
89.0		-0.481	-0.489	-0.504	-0.581	-0.872
93.0		-0.563	-0.495	-0.524	-0.584	0.040
96.0		-0.578	-0.481	-0.532	-0.571	-0.858
100.0		-0.444	-0.393	-0.488	-0.492	-0.870
2.5	(LOWER)	0.188	0.174	0.190	0.185	0.180
5.0		0.140	0.101	0.134	0.148	0.130
10.0		0.113	0.137	0.108	0.118	0.075
24.0		0.086	0.074	0.093	0.079	0.085
33.0		0.088	0.110	0.130	0.154	0.024
54.0		0.218	0.249	0.302	0.278	0.404
73.5		0.547	0.585	0.560	0.826	0.429
84.0		0.888	0.784	-0.677	0.774	0.388
96.0		0.472	0.568	0.388	0.375	0.277

WING PRESSURE COEFFICIENTS

RUN 358 POINT 4 ALPHA 0.00 PSI -5.01 HEIGHT 87.22

X/C, %		BP 2	BP 6	BP 12	BP 16	BP 22
0.0	(UPPER)	0.479	0.358	0.252	0.213	0.175
2.5		-0.214	-0.287	-0.388	-0.401	-0.387
5.0		-0.199	-0.274	-0.324	-0.337	-0.358
10.0		-0.224	-0.282	-0.306	-0.336	-0.332
15.0		-0.212	-0.252	-0.278	-0.311	-0.276
24.0		-0.208	-0.234	-0.244	-0.283	-0.249
33.0		-0.179	-0.223	-0.261	-0.234	-0.223
54.0		-0.109	-0.250	-0.283	1.401	-0.240
65.0		0.024	-0.333	-0.370	-0.368	-0.319
78.5		0.017	-0.550	-0.573	-0.586	-0.651
79.5		-0.447	-0.487	-0.530	-0.536	-0.689
80.5		-0.457	-0.488	-0.489	-0.580	0.004
81.5		-0.478	0.743	-0.514	-0.519	-0.702
82.0		-0.477	-0.402	-0.218	-0.531	-0.670
84.0		-0.489	-0.488	-0.376	-0.588	-0.650
87.0		-0.488	-0.457	-0.499	-0.536	-0.654
89.0		-0.478	-0.488	-0.503	-0.583	-0.672
93.0		-0.555	-0.490	-0.523	-0.584	0.039
96.0		-0.576	-0.457	-0.530	-0.572	-0.857
100.0		-0.442	-0.395	-0.488	-0.440	-0.883
2.5	(LOWER)	0.183	0.189	0.187	0.190	0.184
5.0		0.139	0.098	0.130	0.143	0.125
10.0		0.111	0.132	0.101	0.114	0.071
24.0		0.061	0.071	0.089	0.077	0.083
33.0		0.088	0.107	0.129	0.150	0.025
54.0		0.214	0.247	0.299	0.277	0.420
73.5		0.547	0.583	0.559	0.636	0.448
84.0		0.889	0.782	-0.881	0.795	0.419
96.0		0.470	0.589	0.390	0.375	0.278

RUN 359 POINT 1 ALPHA 8.05 PSI -5.01 HEIGHT 47.50

X/C, %		BP 2	BP 6	BP 12	BP 16	BP 22
0.0	(UPPER)	-1.818	-2.842	-4.075	-3.021	-1.330
2.5		-1.138	-1.434	-1.852	-2.617	-1.122
5.0		-0.834	-1.058	-1.285	-2.847	-1.078
10.0		-0.875	-0.785	-0.954	-1.301	-1.073
15.0		-0.574	-0.854	-0.780	-0.801	-0.994
24.0		-0.486	-0.509	-0.573	-0.528	-0.920
33.0		-0.377	-0.431	-0.498	-0.453	-0.808
54.0		-0.208	-0.374	-0.406	1.411	-0.598
65.0		0.048	-0.418	-0.473	-0.473	-0.848
78.5		0.038	-0.807	-0.820	-0.853	-0.832
79.5		-0.504	-0.523	-0.573	-0.611	-0.943
80.5		-0.530	-0.528	-0.510	-0.638	0.025
81.5		-0.558	0.745	-0.545	-0.577	-0.917
82.0		-0.549	-0.456	-0.233	-0.587	-0.897
84.0		-0.581	-0.524	-0.408	-0.850	-0.888
87.0		-0.586	-0.532	-0.551	-0.604	-0.880
89.0		-0.578	-0.538	-0.544	-0.629	-0.895
93.0		-0.659	-0.565	-0.569	-0.655	0.061
96.0		-0.659	-0.525	-0.571	-0.639	-0.855
100.0		-0.475	-0.436	-0.514	-0.611	-0.838
2.5	(LOWER)	0.578	0.524	0.496	0.483	0.446
5.0		0.506	0.402	0.481	0.487	0.410
10.0		0.412	0.485	0.411	0.420	0.310
24.0		0.284	0.282	0.300	0.275	0.178
33.0		0.259	0.275	0.281	0.303	0.048
54.0		0.300	0.337	0.372	0.331	0.422
73.5		0.604	0.648	0.589	0.636	0.450
84.0		0.756	0.796	-0.890	0.808	0.433
96.0		0.501	0.484	0.414	0.383	0.211

WING PRESSURE COEFFICIENTS

RUN 359 POINT 2 ALPHA 8.03 PSI -5.01 HEIGHT 65.61

X/C, %		BP 2	BP 6	BP 12	BP 16	BP 22
0.0	(UPPER)	-1.524	-2.700	-3.884	-3.056	-1.382
2.5		-1.111	-1.309	-1.806	-2.864	-1.128
5.0		-0.818	-1.038	-1.258	-2.824	-1.081
10.0		-0.865	-0.772	-0.837	-0.987	-1.019
15.0		-0.584	-0.843	-0.744	-0.832	-0.991
24.0		-0.485	-0.502	-0.562	-0.578	-0.903
33.0		-0.372	-0.429	-0.489	-0.463	-0.783
54.0		-0.206	-0.374	-0.407	1.420	-0.554
65.0		0.040	-0.419	-0.475	-0.477	-0.598
78.5		0.029	-0.814	-0.829	-0.880	-0.821
79.5		-0.509	-0.521	-0.584	-0.611	-0.931
80.5		-0.534	-0.512	-0.522	-0.658	0.021
81.5		-0.558	0.752	-0.536	-0.575	-0.908
82.0		-0.546	-0.401	-0.250	-0.599	-0.851
84.0		-0.547	-0.528	-0.418	-0.668	-0.876
87.0		-0.583	-0.526	-0.556	-0.603	-0.870
89.0		-0.576	-0.540	-0.555	-0.638	-0.887
93.0		-0.663	-0.570	-0.580	-0.663	0.050
96.0		-0.663	-0.530	-0.584	-0.648	-0.848
100.0		-0.481	-0.441	-0.527	-0.621	-0.834
2.5	(LOWER)	0.506	0.516	0.491	0.482	0.448
5.0		0.492	0.388	0.470	0.479	0.408
10.0		0.398	0.475	0.398	0.409	0.302
24.0		0.249	0.268	0.285	0.282	0.168
33.0		0.241	0.261	0.270	0.289	0.042
54.0		0.290	0.324	0.385	0.324	0.431
73.5		0.587	0.640	0.584	0.642	0.458
84.0		0.752	0.809	-0.882	0.822	0.445
96.0		0.493	0.454	0.400	0.350	0.211

RUN 359 POINT 3 ALPHA 8.02 PSI -5.01 HEIGHT 87.06

X/C, %		BP 2	BP 6	BP 12	BP 16	BP 22
0.0	(UPPER)	-1.473	-2.828	-3.784	-3.067	-1.388
2.5		-1.105	-1.389	-1.799	-2.709	-1.148
5.0		-0.818	-1.033	-1.248	-2.811	-1.099
10.0		-0.866	-0.787	-0.927	-0.859	-1.096
15.0		-0.570	-0.849	-0.744	-0.856	-1.003
24.0		-0.470	-0.507	-0.565	-0.589	-0.908
33.0		-0.377	-0.430	-0.488	-0.470	-0.754
54.0		-0.215	-0.379	-0.412	1.439	-0.542
65.0		0.034	-0.428	-0.482	-0.486	-0.585
78.5		0.025	-0.825	-0.841	-0.868	-0.826
79.5		-0.514	-0.529	-0.587	-0.609	-0.920
80.5		-0.543	-0.540	-0.531	-0.658	0.015
81.5		-0.565	0.776	-0.587	-0.590	-0.924
82.0		-0.563	-0.463	-0.245	-0.612	-0.902
84.0		-0.563	-0.539	-0.420	-0.864	-0.852
87.0		-0.589	-0.537	-0.559	-0.625	-0.875
89.0		-0.590	-0.552	-0.585	-0.648	-0.893
93.0		-0.672	-0.581	-0.589	-0.673	0.053
96.0		-0.672	-0.541	-0.594	-0.656	-0.852
100.0		-0.492	-0.455	-0.538	-0.632	-0.841
2.5	(LOWER)	0.582	0.514	0.495	0.478	0.447
5.0		0.484	0.381	0.461	0.472	0.402
10.0		0.390	0.480	0.388	0.402	0.298
24.0		0.240	0.263	0.280	0.253	0.183
33.0		0.236	0.254	0.270	0.284	0.038
54.0		0.283	0.319	0.358	0.318	0.439
73.5		0.595	0.638	0.582	0.852	0.488
84.0		0.744	0.828	-0.888	0.841	0.457
96.0		0.490	0.450	0.405	0.354	0.207

WING PRESSURE COEFFICIENTS

RUN 360 POINT 1 ALPHA 8.07 PSI 0.00 HEIGHT 47.50

X/C, %		BP 2	BP 6	BP 12	BP 16	BP 22
0.0	(UPPER)	-1.180	-2.259	-3.435	-3.574	-1.488
2.5		-1.021	-1.340	-1.788	-2.736	-1.206
5.0		-0.775	-1.004	-1.245	-1.486	-1.162
10.0		-0.846	-0.761	-0.842	-0.979	-1.182
15.0		-0.550	-0.832	-0.738	-0.810	-1.083
24.0		-0.450	-0.488	-0.583	-0.638	-0.888
33.0		-0.384	-0.414	-0.481	-0.495	-0.840
54.0		-0.197	-0.354	-0.395	1.441	-0.444
65.0		0.060	-0.386	-0.485	-0.476	-0.472
78.5		0.052	-0.589	-0.822	-0.849	-0.783
79.5		-0.470	-0.489	-0.572	-0.810	-0.889
80.5		-0.490	-0.504	-0.517	-0.855	0.044
81.5		-0.499	0.763	-0.555	-0.584	-0.858
82.0		-0.489	-0.422	-0.231	-0.809	-0.850
84.0		-0.498	-0.496	-0.488	-0.857	-0.836
87.9		-0.510	-0.489	-0.547	-0.805	-0.821
89.0		-0.500	-0.498	-0.547	-0.838	-0.847
93.0		-0.562	-0.521	-0.588	-0.883	0.078
96.0		-0.557	-0.485	-0.572	-0.848	-0.806
100.0		-0.441	-0.420	-0.518	-0.823	-0.797
2.5	(LOWER)	0.557	0.567	0.588	0.559	0.532
5.0		0.478	0.410	0.523	0.536	0.468
10.0		0.395	0.503	0.432	0.454	0.350
24.0		0.254	0.282	0.306	0.290	0.213
33.0		0.253	0.276	0.303	0.322	0.065
54.0		0.316	0.342	0.381	0.353	0.445
73.5		0.808	0.845	0.825	0.882	0.472
84.0		0.774	0.840	-0.844	0.852	0.489
96.0		0.456	0.459	0.429	0.397	0.285

RUN 360 POINT 2 ALPHA 8.05 PSI 0.00 HEIGHT 65.67

X/C, %		BP 2	BP 6	BP 12	BP 16	BP 22
0.0	(UPPER)	-1.074	-2.125	-3.215	-3.535	-1.833
2.5		-0.997	-1.313	-1.723	-2.080	-1.326
5.0		-0.768	-0.989	-1.216	-1.397	-1.289
10.0		-0.643	-0.750	-0.916	-1.030	-1.273
15.0		-0.549	-0.827	-0.729	-0.838	-1.128
24.0		-0.461	-0.500	-0.558	-0.652	-0.834
33.0		-0.370	-0.416	-0.480	-0.512	-0.585
54.0		-0.197	-0.380	-0.402	1.446	-0.436
65.0		0.048	-0.405	-0.475	-0.489	-0.474
78.5		0.039	-0.802	-0.837	-0.854	-0.779
79.5		-0.486	-0.507	-0.503	-0.826	-0.876
80.5		-0.497	-0.500	-0.535	-0.889	0.030
81.5		-0.522	0.771	-0.568	-0.588	-0.854
82.0		-0.519	-0.441	-0.247	-0.816	-0.835
84.0		-0.500	-0.504	-0.410	-0.874	-0.825
87.0		-0.528	-0.501	-0.567	-0.806	-0.809
89.0		-0.511	-0.511	-0.585	-0.850	-0.834
93.0		-0.573	-0.536	-0.588	-0.879	0.058
96.0		-0.588	-0.496	-0.589	-0.883	-0.799
100.0		-0.453	-0.434	-0.537	-0.839	-0.800
2.5	(LOWER)	0.541	0.552	0.562	0.543	0.530
5.0		0.471	0.390	0.503	0.518	0.462
10.0		0.375	0.488	0.412	0.436	0.340
24.0		0.235	0.268	0.289	0.274	0.200
33.0		0.236	0.261	0.286	0.305	0.053
54.0		0.299	0.327	0.373	0.339	0.447
73.5		0.584	0.829	0.817	0.864	0.475
84.0		0.757	0.844	-0.835	0.857	0.472
96.0		0.441	0.448	0.416	0.387	0.260

WING PRESSURE COEFFICIENTS

RUN 360 POINT 3 ALPHA 8.04 PSI 0.00 HEIGHT 87.01

X/C, %		BP 2	BP 6	BP 12	BP 16	BP 22
0.0	(UPPER)	-0.894	-1.993	-3.043	-3.445	-1.736
2.5		-0.873	-1.277	-1.873	-1.925	-1.414
5.0		-0.750	-0.961	-1.180	-1.355	-1.350
10.0		-0.829	-0.742	-0.908	-1.008	-1.333
15.0		-0.546	-0.827	-0.715	-0.819	-1.135
24.0		-0.451	-0.476	-0.549	-0.842	-0.708
33.0		-0.364	-0.414	-0.474	-0.507	-0.518
54.0		-0.191	-0.397	-0.398	1.451	-0.431
65.0		0.045	-0.405	-0.475	-0.493	-0.471
78.5		0.038	-0.809	-0.840	-0.853	-0.778
79.5		-0.482	-0.507	-0.582	-0.815	-0.805
80.5		-0.501	-0.529	-0.558	-0.873	0.031
81.5		-0.515	0.782	-0.573	-0.888	-0.858
82.0		-0.520	-0.440	-0.224	-0.801	-0.820
84.0		-0.526	-0.529	-0.433	-0.860	-0.787
87.0		-0.538	-0.502	-0.577	-0.831	-0.812
89.0		-0.518	-0.517	-0.570	-0.849	-0.827
93.0		-0.588	-0.543	-0.591	-0.877	0.066
96.0		-0.582	-0.506	-0.595	-0.861	-0.793
100.0		-0.456	-0.448	-0.542	-0.838	-0.798
2.5	(LOWER)	0.538	0.547	0.553	0.539	0.535
5.0		0.438	0.380	0.498	0.508	0.481
10.0		0.365	0.478	0.397	0.427	0.337
24.0		0.225	0.257	0.278	0.284	0.198
33.0		0.228	0.254	0.280	0.298	0.050
54.0		0.298	0.321	0.388	0.334	0.453
73.5		0.584	0.828	0.811	0.872	0.484
84.0		0.766	0.854	-0.822	0.867	0.487
96.0		0.437	0.445	0.415	0.388	0.264

RUN 361 POINT 1 ALPHA -0.01 PSI 0.00 HEIGHT 19.15

X/C, %		BP 2	BP 6	BP 12	BP 16	BP 22
0.0	(UPPER)	0.528	0.393	0.224	0.138	0.000
2.5		-0.220	-0.323	-0.486	-0.508	-0.513
5.0		-0.223	-0.308	-0.392	-0.412	-0.430
10.0		-0.254	-0.298	-0.380	-0.397	-0.394
15.0		-0.245	-0.285	-0.314	-0.358	-0.311
24.0		-0.242	-0.257	-0.272	-0.326	-0.281
33.0		-0.202	-0.242	-0.248	-0.280	-0.291
54.0		-0.224	-0.257	-0.275	1.441	-0.253
65.0		0.040	-0.330	-0.382	-0.381	-0.329
78.5		0.042	-0.541	-0.578	-0.589	-0.848
79.5		-0.414	-0.441	-0.532	-0.541	-0.888
80.5		-0.429	-0.457	-0.478	-0.592	0.036
81.5		-0.448	0.789	-0.518	-0.527	-0.713
82.0		-0.449	-0.377	-0.201	-0.534	-0.878
84.0		-0.432	-0.449	-0.305	-0.588	-0.857
87.0		-0.449	-0.426	-0.504	-0.546	-0.862
89.0		-0.428	-0.441	-0.499	-0.571	-0.862
93.0		-0.482	-0.462	-0.520	-0.598	0.071
96.0		-0.481	-0.426	-0.528	-0.588	-0.863
100.0		-0.388	-0.387	-0.478	-0.564	-0.883
2.5	(LOWER)	0.184	0.216	0.258	0.271	0.279
5.0		0.140	0.150	0.200	0.215	0.195
10.0		0.141	0.181	0.181	0.180	0.125
24.0		0.100	0.123	0.138	0.120	0.108
33.0		0.134	0.161	0.179	0.157	0.057
54.0		0.270	0.292	0.335	0.306	0.432
73.5		0.557	0.599	0.820	0.852	0.462
84.0		0.844	0.836	-0.718	0.847	0.484
96.0		0.453	0.457	0.424	0.395	0.301

WING PRESSURE COEFFICIENTS

RUN 361 POINT 2 ALPHA -0.03 PSI 0.00 HEIGHT 32.82

X/C, %		BP 2	BP 6	BP 12	BP 16	BP 22
0.0	(UPPER)	0.556	0.457	0.346	0.284	0.267
2.5		-0.180	-0.285	-0.386	-0.413	-0.391
5.0		-0.195	-0.288	-0.335	-0.347	-0.358
10.0		-0.228	-0.283	-0.321	-0.354	-0.351
15.0		-0.219	-0.263	-0.284	-0.324	-0.277
24.0		-0.231	-0.240	-0.247	-0.304	-0.259
33.0		-0.189	-0.227	-0.266	-0.247	-0.234
54.0		-0.221	-0.244	-0.267	1.437	-0.247
85.0		0.038	-0.322	-0.375	-0.373	-0.331
78.5		0.027	-0.541	-0.582	-0.596	-0.645
79.5		-0.403	-0.434	-0.535	-0.551	-0.680
80.5		-0.417	-0.454	-0.472	-0.587	0.035
81.5		-0.431	0.760	-0.530	-0.542	-0.713
82.0		-0.429	-0.377	-0.213	-0.551	-0.690
84.0		-0.418	-0.439	-0.373	-0.593	-0.657
87.0		-0.429	-0.431	-0.504	-0.552	-0.653
89.0		-0.407	-0.433	-0.505	-0.577	-0.680
93.0		-0.449	-0.450	-0.525	-0.604	0.055
96.0		-0.450	-0.417	-0.532	-0.592	-0.668
100.0		-0.371	-0.386	-0.486	-0.588	-0.692
2.5	(LOWER)	0.122	0.163	0.200	0.209	0.218
5.0		0.113	0.110	0.149	0.164	0.149
10.0		0.105	0.136	0.136	0.138	0.088
24.0		0.083	0.084	0.105	0.085	0.086
33.0		0.095	0.124	0.148	0.169	0.044
54.0		0.241	0.263	0.313	0.292	0.431
73.5		0.535	0.577	0.608	0.647	0.461
84.0		0.566	0.746	-0.693	0.844	0.486
96.0		0.433	0.443	0.418	0.398	0.307

RUN 361 POINT 3 ALPHA -0.06 PSI 0.00 HEIGHT 85.00

X/C, %		BP 2	BP 6	BP 12	BP 16	BP 22
0.0	(UPPER)	0.578	0.501	0.421	0.377	0.368
2.5		-0.144	-0.218	-0.315	-0.337	-0.306
5.0		-0.167	-0.233	-0.286	-0.295	-0.304
10.0		-0.208	-0.239	-0.295	-0.317	-0.316
15.0		-0.203	-0.245	-0.280	-0.287	-0.257
24.0		-0.217	-0.221	-0.232	-0.288	-0.243
33.0		-0.178	-0.214	-0.249	-0.235	-0.223
54.0		-0.199	-0.235	-0.259	1.434	-0.241
85.0		0.034	-0.318	-0.370	-0.368	-0.328
78.5		0.024	-0.543	-0.585	-0.592	-0.644
79.5		-0.407	-0.450	-0.539	-0.550	-0.702
80.5		-0.402	-0.434	-0.477	-0.594	0.027
81.5		-0.432	0.766	-0.508	-0.527	-0.700
82.0		-0.418	-0.385	-0.228	-0.556	-0.678
84.0		-0.403	-0.431	-0.380	-0.602	-0.667
87.0		-0.425	-0.419	-0.505	-0.541	-0.650
89.0		-0.401	-0.432	-0.508	-0.577	-0.677
93.0		-0.441	-0.451	-0.528	-0.605	0.051
96.0		-0.441	-0.417	-0.534	-0.593	-0.668
100.0		-0.385	-0.386	-0.488	-0.586	-0.688
2.5	(LOWER)	0.088	0.119	0.144	0.159	0.167
5.0		0.073	0.081	0.115	0.123	0.107
10.0		0.077	0.101	0.084	0.107	0.059
24.0		0.042	0.064	0.082	0.065	0.072
33.0		0.074	0.106	0.132	0.154	0.042
54.0		0.232	0.248	0.301	0.283	0.443
73.5		0.523	0.569	0.598	0.658	0.471
84.0		0.541	0.733	-0.686	0.852	0.481
96.0		0.424	0.435	0.412	0.394	0.308

WING PRESSURE COEFFICIENTS

RUN 361 POINT 4 ALPHA -0.07 PSI 0.00 HEIGHT 87.00

X/C, %		BP 2	BP 6	BP 12	BP 16	BP 22
0.0	(UPPER)	0.588	0.523	0.455	0.410	0.398
2.5		-0.118	-0.190	-0.288	-0.300	-0.272
5.0		-0.149	-0.215	-0.260	-0.270	-0.282
10.0		-0.190	-0.215	-0.270	-0.300	-0.300
15.0		-0.190	-0.233	-0.245	-0.282	-0.238
24.0		-0.213	-0.216	-0.220	-0.275	-0.236
33.0		-0.167	-0.206	-0.238	-0.224	-0.217
54.0		-0.192	-0.230	-0.251	1.435	-0.236
85.0		0.037	-0.310	-0.362	-0.309	-0.320
78.5		0.027	-0.535	-0.577	-0.567	-0.638
79.5		-0.398	-0.435	-0.530	-0.540	-0.682
80.5		-0.408	-0.437	-0.483	-0.595	0.025
81.5		-0.419	0.783	-0.515	-0.524	-0.703
82.0		-0.414	-0.370	-0.215	-0.543	-0.672
84.0		-0.403	-0.427	-0.374	-0.594	-0.653
87.0		-0.425	-0.414	-0.498	-0.539	-0.644
89.0		-0.398	-0.428	-0.501	-0.572	-0.672
93.0		-0.437	-0.444	-0.521	-0.600	0.055
96.0		-0.435	-0.411	-0.528	-0.588	-0.663
100.0		-0.383	-0.383	-0.482	-0.559	-0.682
2.5	(LOWER)	0.073	0.102	0.133	0.140	0.148
5.0		0.070	0.073	0.100	0.111	0.095
10.0		0.069	0.088	0.073	0.090	0.054
24.0		0.041	0.063	0.079	0.041	0.071
33.0		0.076	0.104	0.129	0.148	0.043
54.0		0.231	0.249	0.300	0.284	0.448
73.5		0.519	0.567	0.588	0.660	0.476
84.0		0.538	0.729	-0.667	0.860	0.493
96.0		0.425	0.437	0.415	0.387	0.315

RUN 362 POINT 2 ALPHA 0.03 PSI 0.00 HEIGHT 87.42

X/C, %		BP 2	BP 6	BP 12	BP 16	BP 22
0.0	(UPPER)	0.588	0.500	0.434	0.405	0.387
2.5		-0.155	-0.246	-0.337	-0.356	-0.328
5.0		-0.171	-0.234	-0.311	-0.326	-0.344
10.0		-0.216	-0.278	-0.306	-0.342	-0.318
15.0		-0.224	-0.279	-0.296	-0.313	-0.290
24.0		-0.218	-0.239	-0.261	-0.289	-0.280
33.0		-0.194	-0.222	-0.268	-0.256	-0.240
54.0		-0.280	-0.248	-0.284	1.006	-0.263
85.0		0.043	-0.341	-0.385	-0.392	-0.327
78.5		0.038	-0.553	-0.586	-0.632	-0.680
79.5		-0.429	-0.488	-0.539	-0.575	-0.740
80.5		-0.418	-0.404	-0.522	-0.601	0.046
81.5		-0.456	0.037	-0.567	-0.606	-0.720
82.0		-0.455	-0.440	-0.263	-0.621	-0.690
84.0		-0.406	-0.438	-0.483	-0.625	-0.739
87.0		-0.485	-0.447	-0.570	-0.653	-0.738
89.0		-0.437	-0.458	-0.547	-0.614	-0.723
93.0		-0.488	-0.471	-0.555	-0.627	0.043
96.0		-0.470	-0.457	-0.558	-0.624	-0.718
100.0		-0.393	-0.418	-0.524	-0.614	-0.718
2.5	(LOWER)	0.082	0.095	0.137	0.195	0.184
5.0		0.084	0.048	0.100	0.113	0.081
10.0		0.053	0.073	0.071	0.083	0.055
24.0		0.037	0.037	0.076	0.060	0.059
33.0		0.057	0.091	0.118	0.142	0.041
54.0		0.230	0.247	0.289	0.274	0.357
73.5		0.524	0.583	0.607	0.507	0.510
84.0		0.541	0.582	-0.730	0.505	0.432
96.0		0.409	0.432	0.405	0.398	0.306

WING PRESSURE COEFFICIENTS

RUN 362 POINT 3 ALPHA 4.06 PSI 0.00 HEIGHT 87.32

X/C, %		BP 2	BP 6	BP 12	BP 16	BP 22
0.0	(UPPER)	0.080	-0.328	-0.738	-0.970	-1.188
2.5		-0.576	-0.787	-1.139	-0.952	-1.112
5.0		-0.405	-0.558	-0.708	-0.779	-0.841
10.0		-0.415	-0.517	-0.588	-0.657	-0.834
15.0		-0.393	-0.456	-0.513	-0.555	-0.516
24.0		-0.334	-0.370	-0.410	-0.455	-0.418
33.0		-0.292	-0.324	-0.367	-0.382	-0.352
54.0		-0.295	-0.311	-0.353	0.393	-0.345
65.0		0.056	-0.383	-0.436	-0.450	-0.395
78.5		0.051	-0.580	-0.623	-0.656	-0.739
79.5		-0.480	-0.515	-0.577	-0.596	-0.789
80.5		-0.482	-0.442	-0.534	-0.622	0.082
81.5		-0.502	0.020	-0.584	-0.628	-0.775
82.0		-0.503	-0.466	-0.271	-0.638	-0.744
84.0		-0.454	-0.489	-0.496	-0.683	-0.771
87.0		-0.501	-0.488	-0.586	-0.688	-0.768
89.0		-0.494	-0.500	-0.576	-0.641	-0.765
93.0		-0.542	-0.516	-0.585	-0.657	0.060
96.0		-0.543	-0.498	-0.588	-0.653	-0.749
100.0		-0.434	-0.444	-0.549	-0.647	-0.757
2.5	(LOWER)	0.371	0.390	0.446	0.453	0.457
5.0		0.270	0.222	0.340	0.380	0.345
10.0		0.214	0.304	0.255	0.276	0.236
24.0		0.130	0.143	0.184	0.170	0.138
33.0		0.142	0.167	0.199	0.225	0.051
54.0		0.271	0.285	0.327	0.301	0.339
73.5		0.588	0.601	0.637	0.493	0.513
84.0		0.655	0.550	-0.766	0.502	0.430
96.0		0.415	0.436	0.404	0.386	0.292

RUN 362 POINT 4 ALPHA 8.06 PSI 0.00 HEIGHT 87.69

X/C, %		BP 2	BP 6	BP 12	BP 16	BP 22
0.0	(UPPER)	-1.052	-2.110	-3.173	-3.597	-1.797
2.5		-1.019	-1.346	-1.743	-2.012	-1.471
5.0		-0.779	-1.004	-1.239	-1.423	-1.416
10.0		-0.652	-0.784	-0.833	-1.057	-1.374
15.0		-0.577	-0.683	-0.787	-0.855	-1.191
24.0		-0.467	-0.517	-0.582	-0.662	-0.804
33.0		-0.390	-0.427	-0.497	-0.536	-0.543
54.0		-0.315	-0.370	-0.429	0.973	-0.451
65.0		0.058	-0.430	-0.493	-0.513	-0.485
78.5		0.051	-0.821	-0.858	-0.880	-0.808
79.5		-0.503	-0.553	-0.594	-0.628	-0.880
80.5		-0.502	-0.484	-0.562	-0.658	0.064
81.5		-0.536	0.006	-0.613	-0.653	-0.869
82.0		-0.544	-0.492	-0.268	-0.867	-0.833
84.0		-0.487	-0.504	-0.502	-0.690	-0.856
87.0		-0.557	-0.521	-0.624	-0.717	-0.865
89.0		-0.545	-0.541	-0.600	-0.675	-0.864
93.0		-0.605	-0.559	-0.612	-0.696	0.066
96.0		-0.601	-0.537	-0.618	-0.689	-0.831
100.0		-0.473	-0.465	-0.572	-0.676	-0.822
2.5	(LOWER)	0.570	0.554	0.578	0.553	0.542
5.0		0.447	0.373	0.498	0.517	0.466
10.0		0.361	0.478	0.407	0.427	0.348
24.0		0.231	0.249	0.281	0.267	0.196
33.0		0.226	0.251	0.279	0.297	0.058
54.0		0.310	0.323	0.368	0.330	0.321
73.5		0.592	0.628	0.618	0.482	0.485
84.0		0.777	0.571	-0.853	0.487	0.418
96.0		0.434	0.448	0.417	0.397	0.267

WING PRESSURE COEFFICIENTS

RUN 362 POINT 5 ALPHA 12.04 PSI 0.00 HEIGHT 87.75

X/C, %		BP 2	BP 6	BP 12	BP 16	BP 22
0.0	(UPPER)	-2.830	-4.890	-5.910	-2.910	-1.340
2.5		-1.812	-2.100	-2.400	-2.337	-1.277
5.0		-1.186	-1.523	-1.874	-2.270	-1.249
10.0		-0.917	-1.145	-1.394	-2.340	-1.255
15.0		-0.790	-0.938	-1.180	-2.188	-1.194
24.0		-0.627	-0.688	-0.871	-1.453	-1.188
33.0		-0.487	-0.588	-0.700	-0.841	-1.128
54.0		-0.331	-0.441	-0.537	0.956	-1.019
65.0		0.050	-0.479	-0.552	-0.448	-0.889
78.5		0.043	-0.675	-0.703	-0.714	-0.888
79.5		-0.535	-0.561	-0.657	-0.693	-0.909
80.5		-0.521	-0.501	-0.600	-0.727	0.058
81.5		-0.557	-0.011	-0.640	-0.716	-0.891
82.0		-0.509	-0.498	-0.315	-0.716	-0.882
84.0		-0.511	-0.513	-0.522	-0.751	-0.888
87.0		-0.563	-0.545	-0.648	-0.700	-0.888
89.0		-0.561	-0.550	-0.639	-0.735	-0.882
93.0		-0.620	-0.584	-0.685	-0.785	0.062
96.0		-0.621	-0.549	-0.666	-0.761	-0.833
100.0		-0.483	-0.455	-0.579	-0.713	-0.824
2.5	(LOWER)	0.674	0.606	0.561	0.588	0.535
5.0		0.601	0.506	0.586	0.594	0.517
10.0		0.505	0.602	0.526	0.531	0.424
24.0		0.334	0.350	0.388	0.353	0.288
33.0		0.319	0.334	0.357	0.372	0.052
54.0		0.361	0.373	0.400	0.383	0.304
73.5		0.638	0.674	0.642	0.470	0.497
84.0		0.754	0.642	-0.861	0.482	0.414
96.0		0.468	0.465	0.426	0.388	0.248

RUN 362 POINT 6 ALPHA 16.07 PSI 0.00 HEIGHT 87.03

X/C, %		BP 2	BP 6	BP 12	BP 16	BP 22
0.0	(UPPER)	-4.933	-2.640	-1.480	-1.230	-0.900
2.5		-2.283	-2.406	-1.438	-1.167	-0.891
5.0		-1.651	-2.376	-1.444	-1.154	-0.888
10.0		-1.250	-2.247	-1.381	-1.153	-0.887
15.0		-1.087	-1.824	-1.355	-1.121	-0.856
24.0		-0.837	-1.231	-1.326	-1.113	-0.887
33.0		-0.656	-0.854	-1.278	-1.070	-0.847
54.0		-0.380	-0.480	-0.978	0.938	-0.787
65.0		0.035	-0.489	-0.801	-0.890	-0.725
78.5		0.027	-0.749	-0.770	-0.808	-0.710
79.5		-0.600	-0.683	-0.837	-0.780	-0.735
80.5		-0.607	-0.599	-0.781	-0.814	0.054
81.5		-0.643	-0.022	-0.799	-0.792	-0.712
82.0		-0.639	-0.587	-0.395	-0.785	-0.897
84.0		-0.570	-0.602	-0.641	-0.789	-0.700
87.0		-0.636	-0.616	-0.770	-0.817	-0.687
89.0		-0.619	-0.634	-0.733	-0.739	-0.686
93.0		-0.690	-0.665	-0.730	-0.741	0.050
96.0		-0.684	-0.626	-0.737	-0.720	-0.668
100.0		-0.489	-0.510	-0.629	-0.678	-0.681
2.5	(LOWER)	0.739	0.650	0.615	0.559	0.512
5.0		0.725	0.598	0.640	0.603	0.522
10.0		0.623	0.683	0.575	0.564	0.452
24.0		0.413	0.427	0.442	0.401	0.308
33.0		0.390	0.394	0.407	0.413	0.041
54.0		0.391	0.401	0.436	0.391	0.288
73.5		0.651	0.709	0.668	0.473	0.493
84.0		0.793	0.678	-0.686	0.473	0.412
96.0		0.495	0.465	0.432	0.395	0.277

WING PRESSURE COEFFICIENTS

RUN 362 POINT 7 ALPHA 22.05 PSI 0.00 HEIGHT 88.15

X/C, %		BP 2	BP 6	BP 12	BP 16	BP 22
0.0	(UPPER)	-1.402	-1.185	-1.006	-0.983	-0.884
2.5		-1.316	-1.136	-1.000	-0.942	-0.858
5.0		-1.292	-1.147	-1.021	-0.936	-0.832
10.0		-1.222	-1.130	-0.983	-0.957	-0.867
15.0		-1.177	-1.138	-0.985	-0.946	-0.829
24.0		-1.098	-1.071	-0.974	-0.980	-0.855
33.0		-1.008	-1.031	-0.977	-0.931	-0.859
54.0		-0.606	-0.957	-0.956	0.922	-0.869
65.0		-0.081	-0.905	-0.930	-0.895	-0.854
78.5		-0.089	-0.860	-0.936	-0.966	-0.952
79.5		-0.810	-0.822	-0.902	-0.859	-0.909
80.5		-0.842	-0.787	-0.834	-0.898	-0.672
81.5		-0.869	-0.037	-0.851	-0.848	-0.883
82.0		-0.887	-0.770	-0.490	-0.843	-0.843
84.0		-0.789	-0.787	-0.880	-0.867	-0.827
87.0		-0.803	-0.779	-0.838	-0.861	-0.798
89.0		-0.778	-0.781	-0.791	-0.801	-0.806
93.0		-0.827	-0.798	-0.770	-0.799	-0.067
96.0		-0.809	-0.766	-0.759	-0.770	-0.751
100.0		-0.649	-0.659	-0.669	-0.735	-0.760
2.5	(LOWER)	0.812	0.848	0.579	0.504	0.438
5.0		0.790	0.852	0.847	0.587	0.504
10.0		0.687	0.710	0.612	0.593	0.468
24.0		0.472	0.495	0.485	0.444	0.334
33.0		0.443	0.450	0.451	0.451	-0.080
54.0		0.422	0.428	0.453	0.401	0.262
73.5		0.645	0.718	0.678	0.478	0.472
84.0		0.771	0.669	-0.787	0.455	0.403
98.0		0.488	0.451	0.412	0.381	0.235

RUN 363 POINT 1 ALPHA -0.02 PSI 0.00 HEIGHT 88.05

X/C, %		BP 2	BP 6	BP 12	BP 16	BP 22
0.0	(UPPER)	0.238	-0.238	-0.979	-1.626	-2.480
2.5		-0.562	-0.805	-1.327	-1.291	-1.605
5.0		-0.522	-0.682	-0.926	-1.080	-1.307
10.0		-0.533	-0.642	-0.818	-0.992	-1.105
15.0		-0.544	-0.660	-0.755	-0.910	-0.920
24.0		-0.555	-0.610	-0.716	-0.889	-0.882
33.0		-0.547	-0.630	-0.758	-0.846	-0.883
54.0		-0.714	-0.884	-1.068	0.794	-1.192
65.0		-0.094	-1.452	-1.592	-1.695	-1.568
78.5		-0.109	-4.088	-4.688	-5.054	-5.328
79.5		-56.233	-46.511	-44.529	-48.909	-33.260
80.5		-6.009	-8.027	-5.931	-12.015	-0.086
81.5		-3.734	-0.963	-4.935	-6.233	-8.583
82.0		-1.460	-3.422	-0.349	-4.886	-5.781
84.0		-4.138	-3.702	-3.868	-4.013	-4.567
87.0		-0.765	-3.144	-2.908	-3.013	-3.265
89.0		-1.265	-1.897	-3.098	-3.413	-2.497
93.0		-1.067	-1.133	-1.105	-2.370	-0.057
96.0		-1.364	-0.985	-0.418	-1.238	-3.470
100.0		-0.405	-0.239	-0.328	-0.288	-0.747
2.5	(LOWER)	0.286	0.353	0.429	0.415	0.456
5.0		0.210	0.237	0.342	0.355	0.351
10.0		0.214	0.300	0.268	0.311	0.230
24.0		0.144	0.189	0.237	0.175	0.126
33.0		0.195	0.217	0.257	0.276	-0.080
54.0		0.370	0.379	0.417	0.335	-0.387
73.5		0.542	0.601	0.606	0.246	0.211
84.0		0.545	0.369	-3.769	-0.055	0.169
96.0		0.596	0.712	0.696	0.626	0.230

WING PRESSURE COEFFICIENTS

RUN 363 POINT 2 ALPHA 4.05 PSI 0.00 HEIGHT 87.40

X/C, %		BP 2	BP 6	BP 12	BP 16	BP 22
0.0	(UPPER)	-0.838	-2.050	-3.780	-4.387	-2.392
2.5		-0.988	-1.428	-2.030	-3.783	-2.030
5.0		-0.887	-1.128	-1.581	-2.140	-1.837
10.0		-0.791	-0.954	-1.243	-1.318	-1.857
15.0		-0.756	-0.912	-1.074	-1.206	-1.805
24.0		-0.729	-0.868	-0.942	-1.118	-1.826
33.0		-0.682	-0.771	-0.836	-1.027	-1.336
54.0		-0.780	-0.982	-1.190	0.751	-1.403
65.0		-0.092	-1.518	-1.892	-1.814	-1.818
78.5		-0.106	-4.165	-4.816	-5.241	-5.054
79.5		-42.388	-36.646	-39.712	-42.826	-33.792
80.5		-6.287	-6.846	-7.644	-12.041	-0.093
81.5		-3.703	-1.038	-5.052	-6.512	-8.341
82.0		-1.836	-3.533	-0.588	-5.150	-6.616
84.0		-4.014	-3.707	-3.850	-4.125	-5.344
87.0		-0.831	-3.116	-2.988	-3.106	-3.870
89.0		-1.245	-1.907	-3.068	-3.453	-3.108
93.0		-1.081	-1.148	-1.182	-2.447	-0.050
96.0		-1.386	-0.989	-0.504	-1.325	-3.807
100.0		-0.349	-0.210	-0.247	-0.223	-0.810
2.5	(LOWER)	0.507	0.527	0.530	0.468	0.470
5.0		0.381	0.379	0.498	0.486	0.417
10.0		0.350	0.472	0.405	0.443	0.298
24.0		0.239	0.288	0.329	0.261	0.151
33.0		0.274	0.290	0.325	0.334	-0.076
54.0		0.404	0.407	0.454	0.357	-0.426
73.5		0.601	0.644	0.603	0.238	0.142
84.0		0.729	0.318	-4.243	-0.130	0.086
96.0		0.615	0.708	0.703	0.603	0.186

RUN 363 POINT 3 ALPHA 8.06 PSI 0.00 HEIGHT 87.35

X/C, %		BP 2	BP 6	BP 12	BP 16	BP 22
0.0	(UPPER)	-2.886	-5.006	-4.856	-4.458	-2.809
2.5		-1.711	-2.352	-2.708	-4.486	-2.588
5.0		-1.331	-1.744	-2.455	-4.748	-2.526
10.0		-1.126	-1.378	-1.934	-4.129	-2.987
15.0		-1.022	-1.258	-1.600	-1.877	-2.500
24.0		-0.934	-1.038	-1.315	-1.082	-2.868
33.0		-0.849	-0.971	-1.242	-1.050	-2.700
54.0		-0.855	-1.104	-1.384	0.729	-2.363
65.0		-0.068	-1.630	-1.849	-1.922	-1.880
78.5		-0.105	-4.279	-4.836	-5.807	-5.700
79.5		-50.931	-42.498	-39.654	-50.894	-38.882
80.5		-6.921	-7.347	-6.767	-12.788	-0.094
81.5		-3.791	-1.103	-5.088	-6.884	-10.647
82.0		-1.487	-3.594	-0.437	-5.502	-7.717
84.0		-4.130	-3.855	-3.981	-4.476	-6.353
87.0		-0.762	-3.261	-3.058	-3.398	-4.597
89.0		-1.280	-2.003	-3.197	-3.770	-3.582
93.0		-1.136	-1.239	-1.238	-2.885	-0.048
96.0		-1.427	-1.078	-0.586	-1.475	-4.143
100.0		-0.328	-0.209	-0.342	-0.270	-0.710
2.5	(LOWER)	0.628	0.579	0.480	0.378	0.368
5.0		0.546	0.511	0.554	0.527	0.442
10.0		0.507	0.601	0.511	0.538	0.368
24.0		0.347	0.392	0.428	0.345	0.213
33.0		0.366	0.368	0.397	0.408	-0.072
54.0		0.458	0.447	0.489	0.385	-0.477
73.5		0.646	0.712	0.644	0.240	0.108
84.0		0.751	0.313	-4.840	-0.210	0.101
96.0		0.652	0.722	0.704	0.622	0.130

WING PRESSURE COEFFICIENTS

RUN 363 POINT 4 ALPHA 12.06 PSI 0.00 HEIGHT 87.08

X/C, %		BP 2	BP 6	BP 12	BP 16	BP 22
0.0	(UPPER)	-5.328	-5.544	-4.002	-3.122	-2.623
2.5		-2.565	-5.363	-4.232	-3.119	-2.600
5.0		-1.880	-5.514	-4.135	-3.226	-2.588
10.0		-1.493	-1.093	-4.174	-3.443	-2.888
15.0		-1.308	-1.226	-4.119	-3.687	-2.608
24.0		-1.111	-1.087	-2.026	-3.765	-2.728
33.0		-0.958	-0.990	-0.829	-3.131	-2.889
54.0		-0.844	-1.087	-1.073	0.683	-4.156
65.0		-0.072	-1.802	-1.843	-1.242	-4.605
78.5		-0.087	-4.375	-4.271	-4.858	-6.938
79.5		-49.650	-43.923	-45.863	-47.945	-31.151
80.5		-6.735	-7.456	-8.855	-11.968	-0.084
81.5		-3.755	-1.101	-5.365	-6.676	-11.086
82.0		-1.529	-3.835	-0.808	-5.377	-8.899
84.0		-4.079	-3.882	-4.120	-4.399	-7.526
87.0		-0.829	-3.289	-3.228	-3.403	-5.222
89.0		-1.305	-1.999	-3.322	-3.723	-4.072
93.0		-1.213	-1.235	-1.296	-2.699	-0.039
96.0		-1.452	-1.088	-0.589	-1.523	-3.854
100.0		-0.249	-0.131	-0.266	-0.299	-0.713
2.5	(LOWER)	0.674	0.530	0.421	0.309	0.238
5.0		0.666	0.615	0.598	0.521	0.405
10.0		0.631	0.662	0.589	0.579	0.396
24.0		0.444	0.491	0.506	0.416	0.263
33.0		0.451	0.451	0.483	0.461	-0.057
54.0		0.498	0.492	0.517	0.411	-0.467
73.5		0.689	0.756	0.694	0.277	0.116
84.0		0.788	0.322	-4.364	-0.261	0.013
96.0		0.691	0.741	0.696	0.594	0.180

RUN 363 POINT 5 ALPHA 16.04 PSI 0.00 HEIGHT 87.03

X/C, %		BP 2	BP 6	BP 12	BP 16	BP 22
0.0	(UPPER)	-8.659	-8.451	-4.305	-3.499	-2.732
2.5		-3.574	-7.528	-4.599	-3.585	-2.723
5.0		-2.429	-8.221	-4.751	-3.743	-2.751
10.0		-1.882	-1.569	-5.727	-3.978	-2.920
15.0		-1.613	-1.288	-6.032	-4.492	-2.920
24.0		-1.332	-1.182	-2.814	-5.235	-3.119
33.0		-1.102	-1.094	-0.983	-4.244	-3.128
54.0		-0.941	-1.170	-1.016	0.643	-4.844
65.0		-0.082	-1.675	-1.630	-1.223	-5.053
78.5		-0.102	-4.523	-5.229	-4.951	-6.263
79.5		-49.006	-45.460	-48.477	-50.667	-27.998
80.5		-6.816	-7.783	-7.054	-12.518	-0.097
81.5		-3.847	-1.219	-5.679	-7.175	-9.523
82.0		-1.572	-3.786	-0.734	-5.825	-7.449
84.0		-4.185	-4.061	-4.395	-4.822	-6.433
87.0		-0.917	-3.437	-3.480	-3.835	-4.545
89.0		-1.377	-2.138	-3.558	-4.107	-3.671
93.0		-1.327	-1.388	-1.449	-3.006	-0.055
96.0		-1.572	-1.223	-0.672	-1.748	-4.095
100.0		-0.179	-0.077	-0.254	-0.318	-0.990
2.5	(LOWER)	0.639	0.383	0.242	0.125	0.085
5.0		0.768	0.683	0.565	0.470	0.346
10.0		0.735	0.664	0.627	0.600	0.396
24.0		0.504	0.565	0.564	0.454	0.285
33.0		0.505	0.515	0.514	0.499	-0.069
54.0		0.533	0.533	0.541	0.415	-0.532
73.5		0.673	0.775	0.721	0.289	0.111
84.0		0.769	0.321	-4.560	-0.364	-0.102
96.0		0.717	0.766	0.705	0.576	0.062

WING PRESSURE COEFFICIENTS

RUN 363 POINT 6 ALPHA 22.08 PSI 0.00 HEIGHT 88.03

X/C, %		BP 2	BP 6	BP 12	BP 16	BP 22
0.0	(UPPER)	-14.877	-8.401	-4.819	-3.868	-2.847
2.5		-5.387	-8.145	-4.951	-3.926	-2.851
5.0		-3.889	-9.875	-5.130	-4.050	-2.916
10.0		-2.648	-5.060	-5.583	-4.187	-3.080
15.0		-2.182	-2.170	-6.055	-4.407	-3.015
24.0		-1.685	-1.509	-5.137	-5.103	-3.090
33.0		-1.344	-1.308	-3.158	-4.946	-3.047
54.0		-1.055	-1.268	-1.073	0.589	-4.897
65.0		-0.104	-1.737	-1.422	-2.042	-4.084
78.5		-0.126	-4.832	-5.501	-4.123	-4.955
79.5		-45.833	-45.178	-49.620	-42.171	-23.600
80.5		-6.812	-8.136	-7.008	-11.320	-0.142
81.5		-3.982	-1.342	-6.011	-6.598	-7.813
82.0		-1.683	-4.013	-0.822	-5.375	-5.791
84.0		-4.399	-4.348	-4.956	-4.982	-5.085
87.0		-1.023	-3.714	-3.903	-3.904	-3.740
89.0		-1.487	-2.364	-3.884	-4.288	-3.131
93.0		-1.442	-1.591	-1.883	-3.301	-0.070
96.0		-1.717	-1.450	-0.854	-2.081	-3.951
100.0		-0.157	-0.037	0.085	-0.383	-1.142
2.5	(LOWER)	0.485	0.028	-0.037	-0.181	-0.185
5.0		0.515	0.732	0.458	0.352	0.225
10.0		0.639	0.584	0.626	0.581	0.368
24.0		0.581	0.648	0.629	0.499	0.308
33.0		0.573	0.584	0.573	0.553	-0.083
54.0		0.586	0.573	0.573	0.438	-0.817
73.5		0.674	0.770	0.882	0.265	0.050
84.0		0.781	0.281	-4.250	-0.487	-0.217
96.0		0.751	0.782	0.706	0.548	-0.051

RUN 364 POINT 1 ALPHA 0.02 PSI 0.00 HEIGHT 87.07

X/C, %		BP 2	BP 6	BP 12	BP 16	BP 22
0.0	(UPPER)	0.172	-0.400	-1.286	-2.081	-2.938
2.5		-0.684	-0.900	-1.540	-1.421	-2.207
5.0		-0.820	-0.780	-1.071	-1.197	-1.432
10.0		-0.609	-0.704	-0.824	-1.135	-1.298
15.0		-0.634	-0.780	-0.813	-1.048	-1.017
24.0		-0.680	-0.713	-0.787	-1.087	-1.029
33.0		-0.632	-0.722	-0.882	-0.884	-1.029
54.0		-1.235	-0.898	-1.224	0.128	-2.632
65.0		-0.187	-1.617	-1.828	-2.033	-1.707
78.5		-0.212	-4.699	-5.467	-5.748	-6.074
79.5		-50.610	-48.580	-52.080	-50.850	-45.520
80.5		-7.644	-8.645	-8.570	-16.340	-0.255
81.5		-4.623	-2.995	-5.883	-7.801	-10.880
82.0		-1.138	-3.785	0.284	-5.788	-6.713
84.0		-5.428	-4.778	-4.358	-4.702	-5.165
87.0		-0.617	-4.103	-3.544	-3.504	-3.444
89.0		-1.495	-2.338	-3.872	-4.181	-2.452
93.0		-1.352	-1.381	-1.151	-3.030	-0.111
96.0		-1.882	-1.255	-0.335	-1.449	-3.191
100.0		-0.816	-0.985	-0.744	-1.186	-1.165
2.5	(LOWER)	0.270	0.382	0.418	0.350	0.446
5.0		0.176	0.250	0.354	0.321	0.318
10.0		0.222	0.325	0.247	0.309	0.171
24.0		0.121	0.179	0.218	0.095	0.082
33.0		0.174	0.180	0.214	0.244	-0.158
54.0		0.354	0.327	0.375	0.233	-1.784
73.5		0.495	0.550	0.545	-0.011	0.013
84.0		0.255	-0.508	-4.435	-1.888	-0.213
96.0		0.587	0.249	0.209	0.044	-0.743

WING PRESSURE COEFFICIENTS

RUN 364 POINT 2 ALPHA 4.08 PSI 0.00 HEIGHT 87.00

X/C, %		BP 2	BP 6	BP 12	BP 16	BP 22
0.0	(UPPER)	-1.003	-2.409	-4.339	-4.315	-2.520
2.5		-1.071	-1.546	-2.205	-3.685	-2.173
5.0		-1.000	-1.269	-1.758	-3.568	-2.046
10.0		-0.894	-1.060	-1.378	-1.541	-2.141
15.0		-0.852	-1.058	-1.178	-1.179	-1.928
24.0		-0.875	-0.902	-1.054	-1.264	-1.889
33.0		-0.798	-0.887	-1.072	-1.145	-1.664
54.0		-1.281	-1.115	-1.370	0.077	-2.669
65.0		-0.201	-1.739	-1.873	-2.093	-2.066
78.5		-0.223	-4.852	-5.569	-6.048	-6.466
79.5		-59.888	-48.611	-52.596	-52.484	-47.073
80.5		-7.702	-8.772	-9.822	-16.751	-0.275
81.5		-4.637	-3.122	-5.927	-8.122	-12.027
82.0		-1.127	-3.868	0.141	-6.119	-7.753
84.0		-5.508	-4.862	-4.481	-4.995	-6.111
87.0		-0.597	-4.230	-3.692	-3.726	-4.114
89.0		-1.487	-2.437	-4.012	-4.383	-3.085
93.0		-1.369	-1.472	-1.238	-3.216	-0.130
96.0		-1.760	-1.330	-0.399	-1.588	-4.837
100.0		-0.980	-1.045	-0.723	-1.237	-1.247
2.5	(LOWER)	0.468	0.521	0.493	0.381	0.413
5.0		0.364	0.387	0.481	0.432	0.357
10.0		0.361	0.488	0.379	0.427	0.229
24.0		0.205	0.273	0.310	0.169	0.099
33.0		0.242	0.248	0.282	0.292	-0.156
54.0		0.379	0.356	0.406	0.257	-1.853
73.5		0.546	0.595	0.552	-0.060	-0.035
84.0		0.212	-0.559	-5.111	-1.757	-0.278
96.0		0.536	0.192	0.154	-0.009	-0.817

RUN 364 POINT 3 ALPHA 8.07 PSI 0.00 HEIGHT 87.03

X/C, %		BP 2	BP 6	BP 12	BP 16	BP 22
0.0	(UPPER)	-3.030	-5.084	-4.151	-3.698	-2.721
2.5		-1.883	-4.127	-3.512	-3.567	-2.674
5.0		-1.512	-1.623	-3.489	-3.549	-2.595
10.0		-1.278	-1.395	-2.688	-3.767	-2.747
15.0		-1.189	-1.354	-2.057	-3.545	-2.581
24.0		-1.100	-1.128	-1.401	-2.337	-2.712
33.0		-0.980	-1.054	-1.245	-1.316	-2.785
54.0		-1.302	-1.241	-1.458	0.044	-2.740
65.0		-0.200	-1.849	-2.050	-2.078	-2.867
78.5		-0.226	-5.096	-5.531	-6.003	-6.717
79.5		-59.310	-48.060	-51.880	-53.850	-47.440
80.5		-7.690	-8.952	-9.790	-16.970	-0.284
81.5		-4.678	-3.090	-6.030	-8.401	-13.350
82.0		-1.232	-4.069	0.093	-6.408	-8.290
84.0		-5.508	-5.053	-4.594	-5.288	-7.567
87.0		-0.673	-4.392	-3.826	-3.960	-5.125
89.0		-1.547	-2.570	-4.094	-4.585	-3.934
93.0		-1.485	-1.573	-1.355	-3.403	-0.129
96.0		-1.864	-1.448	-0.537	-1.751	-5.098
100.0		-1.009	-1.070	-0.749	-1.242	-1.070
2.5	(LOWER)	0.597	0.563	0.456	0.297	0.303
5.0		0.506	0.521	0.553	0.463	0.365
10.0		0.510	0.607	0.479	0.501	0.291
24.0		0.299	0.370	0.397	0.250	0.156
33.0		0.338	0.329	0.357	0.356	-0.161
54.0		0.424	0.392	0.428	0.265	-1.863
73.5		0.591	0.661	0.580	-0.089	-0.073
84.0		0.161	-0.590	-5.713	-1.736	-0.318
96.0		0.490	0.148	0.112	-0.052	-0.849

WING PRESSURE COEFFICIENTS

RUN 364 POINT 4 ALPHA 12.03 PSI 0.00 HEIGHT 87.38

X/C, %		BP 2	BP 6	BP 12	BP 16	BP 22
0.0	(UPPER)	-5.837	-5.484	-4.124	-3.302	-2.841
2.5		-2.635	-5.777	-4.366	-3.210	-2.808
5.0		-1.958	-6.231	-4.328	-3.339	-2.762
10.0		-1.590	-1.042	-4.549	-3.843	-2.838
15.0		-1.401	-1.283	-4.828	-4.018	-2.795
24.0		-1.232	-1.155	-2.673	-4.187	-2.874
33.0		-1.063	-1.074	-0.858	-3.418	-3.144
54.0		-1.297	-1.201	-1.443	0.028	-3.509
65.0		-0.187	-1.812	-1.882	-2.042	-5.091
78.5		-0.197	-5.045	-5.489	-5.951	-7.644
79.5		-58.595	-48.150	-53.792	-53.180	-44.623
80.5		-7.551	-8.855	-10.087	-16.858	-0.257
81.5		-4.562	-3.104	-6.252	-8.280	-14.059
82.0		-1.198	-4.070	-0.008	-6.324	-10.611
84.0		-5.392	-5.083	-4.667	-5.289	-8.809
87.0		-0.605	-4.364	-3.944	-3.990	-5.825
89.0		-1.503	-2.521	-4.205	-4.588	-4.243
93.0		-1.533	-1.564	-1.412	-3.438	-0.110
96.0		-1.888	-1.435	-0.549	-1.825	-4.484
100.0		-1.026	-1.088	-0.784	-1.241	-1.088
2.5	(LOWER)	0.625	0.500	0.382	0.192	0.171
5.0		0.617	0.621	0.500	0.458	0.335
10.0		0.647	0.670	0.556	0.558	0.328
24.0		0.408	0.476	0.495	0.324	0.215
33.0		0.430	0.415	0.432	0.420	-0.128
54.0		0.480	0.448	0.484	0.300	-1.843
73.5		0.624	0.707	0.658	-0.106	-0.087
84.0		0.134	-0.620	-5.352	-1.736	-0.350
96.0		0.457	0.113	0.077	-0.081	-0.870

RUN 364 POINT 5 ALPHA 16.07 PSI 0.00 HEIGHT 87.11

X/C, %		BP 2	BP 6	BP 12	BP 16	BP 22
0.0	(UPPER)	-9.128	-6.702	-4.539	-3.778	-2.983
2.5		-3.870	-7.866	-4.821	-3.778	-2.987
5.0		-2.553	-8.681	-5.061	-3.970	-2.967
10.0		-2.009	-1.717	-8.225	-4.261	-3.223
15.0		-1.715	-1.381	-8.499	-4.882	-3.162
24.0		-1.482	-1.297	-2.942	-5.763	-3.419
33.0		-1.219	-1.185	-1.057	-4.485	-3.439
54.0		-1.331	-1.280	-1.481	0.005	-4.082
65.0		-0.187	-1.878	-1.889	-2.074	-5.484
78.5		-0.222	-5.213	-5.537	-5.984	-7.077
79.5		-58.348	-48.526	-55.285	-55.522	-41.292
80.5		-7.560	-8.901	-10.502	-17.083	-0.281
81.5		-4.650	-3.113	-8.651	-8.786	-12.320
82.0		-1.268	-4.239	-0.174	-6.744	-9.040
84.0		-5.458	-5.280	-4.955	-5.740	-7.576
87.0		-0.660	-4.524	-4.204	-4.448	-4.945
89.0		-1.573	-2.664	-4.458	-4.978	-3.830
93.0		-1.864	-1.708	-1.597	-3.747	-0.148
96.0		-2.034	-1.584	-0.688	-2.089	-4.875
100.0		-1.075	-1.132	-0.814	-1.234	-1.133
2.5	(LOWER)	0.587	0.327	0.172	-0.011	0.010
5.0		0.708	0.685	0.525	0.391	0.271
10.0		0.744	0.653	0.580	0.572	0.318
24.0		0.468	0.542	0.538	0.367	0.234
33.0		0.470	0.470	0.482	0.460	-0.153
54.0		0.511	0.483	0.490	0.318	-1.884
73.5		0.610	0.710	0.655	-0.145	-0.109
84.0		0.075	-0.673	-5.431	-1.775	-0.396
96.0		0.406	0.070	0.028	-0.131	-0.916

WING PRESSURE COEFFICIENTS

RUN 384 POINT 6 ALPHA 22.02 PSI 0.00 HEIGHT 99.22

X/C, %		BP 2	BP 6	BP 12	BP 16	BP 22
0.0	(UPPER)	-14.881	-8.662	-4.740	-3.987	-2.970
2.5		-5.512	-8.686	-5.131	-4.065	-2.882
5.0		-3.686	-10.285	-5.384	-4.214	-3.023
10.0		-2.868	-4.555	-6.024	-4.405	-3.290
15.0		-2.189	-2.083	-6.521	-4.712	-3.158
24.0		-1.721	-1.530	-5.158	-5.580	-3.288
33.0		-1.367	-1.334	-2.835	-5.255	-3.246
54.0		-1.300	-1.324	-1.442	0.011	-4.045
65.0		-0.186	-1.832	-1.812	-2.026	-4.408
78.5		-0.217	-5.125	-5.424	-4.072	-4.094
79.5		-56.517	-47.319	-55.097	-49.377	-34.469
80.5		-7.337	-8.884	-10.420	-15.986	-0.305
81.5		-4.590	-3.034	-6.710	-6.053	-5.618
82.0		-1.271	-4.304	-0.225	-6.191	-6.729
84.0		-5.387	-5.300	-5.085	-5.483	-5.689
87.0		-0.812	-4.587	-4.384	-4.500	-3.811
89.0		-1.608	-2.784	-4.585	-4.868	-3.088
93.0		-1.682	-1.884	-1.753	-3.833	-0.130
96.0		-2.071	-1.752	-0.828	-2.221	-4.474
100.0		-1.040	-1.100	-0.789	-1.159	-1.100
2.5	(LOWER)	0.438	-0.031	-0.133	-0.277	-0.218
5.0		0.736	0.734	0.429	0.284	0.166
10.0		0.835	0.577	0.587	0.570	0.307
24.0		0.565	0.853	0.614	0.428	0.280
33.0		0.568	0.563	0.544	0.528	-0.140
54.0		0.568	0.546	0.547	0.361	-1.838
73.5		0.813	0.718	0.844	-0.149	-0.096
84.0		0.085	-0.658	-4.784	-1.266	-0.377
96.0		0.399	0.073	0.028	-0.137	-0.892

RUN 385 POINT 1 ALPHA 0.03 PSI 0.00 HEIGHT 86.88

X/C, %		BP 2	BP 6	BP 12	BP 16	BP 22
0.0	(UPPER)	0.070	-0.873	-1.724	-2.758	-3.581
2.5		-0.782	-1.017	-1.602	-1.604	-2.839
5.0		-0.767	-0.871	-1.284	-1.336	-1.584
10.0		-0.725	-0.783	-1.021	-1.345	-1.587
15.0		-0.746	-0.973	-0.880	-1.249	-1.156
24.0		-0.855	-0.794	-0.884	-1.352	-1.249
33.0		-0.770	-0.849	-1.016	-1.180	-1.247
54.0		-1.249	-1.182	-2.778	-1.034	-3.901
65.0		-0.337	-1.921	-2.170	-4.760	-1.876
78.5		-0.405	-5.702	-7.777	-6.807	-7.079
79.5		-107.939	-84.693	-80.233	-69.720	-72.866
80.5		-11.580	-12.963	-13.327	-25.282	-0.651
81.5		5.963	-6.798	-6.922	-10.557	-15.422
82.0		0.189	-4.197	2.338	-7.148	-8.291
84.0		-8.310	-6.831	-5.378	-6.140	-5.988
87.0		-0.137	-6.116	-4.797	-4.458	-3.381
89.0		-1.885	-3.127	-5.474	-5.717	-1.841
93.0		-1.872	-1.780	-1.125	-4.277	-0.247
96.0		-2.333	-1.708	-0.028	-1.737	-5.424
100.0		-2.785	-3.003	0.046	-2.480	-3.042
2.5	(LOWER)	0.220	0.369	0.371	0.205	0.418
5.0		0.093	0.273	0.332	0.233	0.236
10.0		0.251	0.372	0.188	0.283	0.068
24.0		0.056	0.162	0.178	-0.079	0.005
33.0		0.132	0.093	0.137	0.183	-0.247
54.0		0.313	0.220	0.252	0.035	-4.549
73.5		0.421	0.481	0.444	-1.308	-1.247
84.0		-0.724	-2.169	-5.524	-3.116	-1.649
96.0		-0.191	-0.805	-0.912	-1.134	-2.611

WING PRESSURE COEFFICIENTS

RUN 385 POINT 2 ALPHA 4.03 PSI 0.00 HEIGHT 87.23

X/C, %		BP 2	BP 6	BP 12	BP 16	BP 22
0.0	(UPPER)	-1.181	-2.812	-4.913	-4.707	-2.006
2.5		-1.213	-1.677	-2.484	-3.806	-2.456
5.0		-1.204	-1.471	-2.070	-3.850	-2.246
10.0		-1.057	-1.171	-1.513	-2.863	-2.490
15.0		-1.001	-1.306	-1.281	-1.318	-2.136
24.0		-1.144	-1.109	-1.184	-1.532	-2.226
33.0		-0.970	-1.074	-1.275	-1.353	-2.056
54.0		-1.389	-1.351	-2.957	-1.157	-4.113
65.0		-0.385	-2.139	-2.410	-4.083	-2.400
78.5		-0.440	-6.088	-6.090	-7.307	-7.751
79.5		-112.822	-88.426	-83.518	-74.024	-77.117
80.5		-12.074	-13.585	-14.014	-26.780	-0.870
81.5		-6.211	-7.210	-7.521	-11.324	-17.278
82.0		0.208	-4.475	2.205	-7.801	-8.800
84.0		-8.656	-7.196	-5.774	-6.628	-7.314
87.0		-0.181	-6.533	-5.138	-4.885	-4.279
89.0		-1.942	-3.359	-5.849	-6.174	-2.545
93.0		-1.985	-1.848	-1.280	-4.639	-0.282
96.0		-2.528	-1.878	-0.122	-1.956	-6.313
100.0		-2.928	-3.148	0.017	-2.416	-3.183
2.5	(LOWER)	0.422	0.509	0.402	0.198	0.385
5.0		0.248	0.398	0.436	0.314	0.250
10.0		0.382	0.515	0.310	0.384	0.005
24.0		0.131	0.232	0.247	-0.027	-0.010
33.0		0.193	0.151	0.190	0.223	-0.291
54.0		0.350	0.233	0.266	0.002	-4.819
73.5		0.443	0.518	0.487	-1.428	-1.353
84.0		-0.771	-2.282	-6.444	-3.270	-1.747
96.0		-0.218	-0.853	-0.962	-0.952	-2.735

RUN 385 POINT 3 ALPHA 8.02 PSI 0.00 HEIGHT 87.74

X/C, %		BP 2	BP 6	BP 12	BP 16	BP 22
0.0	(UPPER)	-3.339	-5.236	-3.978	-3.815	-3.032
2.5		-2.054	-4.922	-3.762	-3.444	-2.981
5.0		-1.748	-2.704	-3.987	-3.481	-2.781
10.0		-1.443	-1.376	-3.410	-3.833	-3.110
15.0		-1.352	-1.572	-2.847	-3.853	-2.799
24.0		-1.394	-1.340	-1.550	-3.410	-3.080
33.0		-1.149	-1.248	-1.277	-2.155	-3.137
54.0		-1.475	-1.455	-3.019	-1.210	-4.226
65.0		-0.397	-2.289	-2.437	-5.055	-3.276
78.5		-0.461	-6.395	-8.190	-7.300	-8.008
79.5		-114.952	-80.401	-88.013	-75.339	-78.174
80.5		-12.180	-13.630	-14.488	-27.484	-0.863
81.5		-6.349	-7.351	-7.790	-11.649	-19.360
82.0		0.283	-4.893	2.240	-7.962	-11.875
84.0		-8.826	-7.484	-6.007	-6.972	-8.443
87.0		-0.188	-6.772	-5.363	-6.191	-5.867
89.0		-1.987	-3.527	-6.122	-6.416	-3.746
93.0		-2.165	-2.080	-1.443	-4.861	-0.280
96.0		-2.781	-2.050	-0.247	-2.180	-7.200
100.0		-2.875	-3.196	-1.900	-2.345	-3.170
2.5	(LOWER)	0.514	0.482	0.323	0.001	0.243
5.0		0.419	0.514	0.488	0.320	0.233
10.0		0.515	0.819	0.399	0.449	0.125
24.0		0.228	0.330	0.344	0.033	0.030
33.0		0.280	0.219	0.230	0.274	-0.310
54.0		0.386	0.256	0.272	0.022	-4.946
73.5		0.481	0.538	0.488	-1.495	-1.406
84.0		-0.785	-2.303	-7.636	-3.335	-1.765
96.0		0.682	-0.852	-0.971	-0.885	-2.781

WING PRESSURE COEFFICIENTS

RUN 365 POINT 4 ALPHA 12.08 PSI 0.00 HEIGHT 88.56

X/C, %		BP 2	BP 6	BP 12	BP 16	BP 22
0.0	(UPPER)	-6.175	-5.689	-4.329	-3.817	-3.238
2.5		-2.950	-6.243	-4.554	-3.583	-3.177
5.0		-2.207	-7.026	-4.739	-3.682	-3.080
10.0		-1.784	-1.109	-5.413	-4.117	-3.408
15.0		-1.806	-1.508	-5.335	-4.702	-3.147
24.0		-1.545	-1.339	-2.089	-5.059	-3.491
33.0		-1.254	-1.266	-0.965	-3.834	-3.724
54.0		-1.388	-1.492	-2.811	-1.137	-4.109
65.0		-0.372	-2.307	-2.321	-4.669	-5.611
78.5		-0.435	-6.415	-7.737	-8.924	-8.875
79.5		-110.233	-87.875	-84.855	-74.586	-75.305
80.5		-11.699	-13.803	-14.357	-26.647	-0.683
81.5		-6.177	-7.020	-7.979	-11.538	-20.256
82.0		0.102	-4.758	1.866	-8.009	-13.656
84.0		-8.540	-7.444	-8.048	-7.028	-11.218
87.0		-0.158	-5.889	-5.466	-5.210	-6.589
89.0		-1.954	-3.554	-6.161	-6.443	-4.581
93.0		-2.194	-2.184	-1.581	-4.938	-0.246
96.0		-2.775	-2.107	-0.381	-2.343	-6.534
100.0		-2.752	-2.856	-1.702	-2.043	-2.935
2.5	(LOWER)	0.556	0.434	0.229	-0.034	0.068
5.0		0.502	0.613	0.509	0.306	0.186
10.0		0.849	0.666	0.448	0.494	0.181
24.0		0.319	0.429	0.429	0.128	0.094
33.0		0.372	0.315	0.319	0.35[illegible]	-0.283
54.0		0.432	0.331	0.340	0.075	-4.702
73.5		0.486	0.559	0.507	-1.366	-1.059
84.0		-0.665	-2.090	-7.585	-3.098	-1.587
96.0		0.732	-0.721	-0.835	-0.620	-2.574

RUN 365 POINT 5 ALPHA 18.12 PSI 0.00 HEIGHT 87.40

X/C, %		BP 2	BP 6	BP 12	BP 16	BP 22
0.0	(UPPER)	-9.911	-7.500	-5.064	-4.400	-3.481
2.5		-4.224	-8.804	-5.347	-4.256	-3.440
5.0		-2.926	-9.500	-5.701	-4.458	-3.380
10.0		-2.273	-1.983	-7.138	-4.885	-3.845
15.0		-1.987	-1.694	-7.217	-5.744	-3.653
24.0		-1.773	-1.524	-3.017	-6.705	-4.041
33.0		-1.453	-1.421	-1.214	-4.932	-4.110
54.0		-1.542	-1.587	-2.893	-1.251	-4.857
65.0		-0.421	-2.453	-2.356	-4.815	-6.403
78.5		-0.494	-6.713	-8.075	-7.118	-8.968
79.5		-114.556	-91.390	-89.235	-79.490	-75.181
80.5		-11.985	-14.477	-15.209	-28.097	-0.774
81.5		-6.328	-7.326	-8.510	-12.238	-19.300
82.0		0.323	-5.070	1.929	-8.573	-12.764
84.0		-8.775	-7.871	-6.391	-7.500	-10.334
87.0		-0.043	-7.150	-5.922	-5.802	-5.940
89.0		-1.993	[illegible].841	-6.638	-7.019	-3.932
93.0		-2.341	-2.406	-1.807	-5.369	-0.294
96.0		-2.959	-2.370	-0.536	-2.619	-6.729
100.0		-2.872	-3.086	-1.700	-2.070	-3.038
2.5	(LOWER)	0.462	0.209	-0.011	-0.294	-0.156
5.0		0.629	0.663	0.422	0.203	0.092
10.0		0.733	0.641	0.476	0.494	0.141
24.0		0.373	0.514	0.471	0.155	0.107
33.0		0.396	0.363	0.360	0.371	-0.343
54.0		0.461	0.353	0.356	0.073	-4.999
73.5		0.457	0.548	0.479	-1.481	-1.210
84.0		-0.712	-2.129	-7.470	-3.228	-1.631
96.0		0.769	-0.745	-0.856	-0.567	-2.671

WING PRESSURE COEFFICIENTS

RUN 365 POINT 6 ALPHA 22.08 PSI 0.00 HEIGHT 90.57

X/C, %		BP 2	BP 6	BP 12	BP 16	BP 22
0.0	(UPPER)	-18.474	-9.800	-5.511	-4.730	-3.572
2.5		-6.277	-11.389	-5.950	-4.712	-3.588
5.0		-4.264	-12.133	-6.285	-4.889	-3.547
10.0		-3.063	-4.658	-7.316	-5.193	-4.006
15.0		-2.537	-2.400	-7.821	-5.881	-3.757
24.0		-2.113	-1.800	-5.993	-6.094	-3.995
33.0		-1.856	-1.626	-2.927	-6.216	-3.906
54.0		-1.402	-1.863	-2.741	-1.123	-4.725
65.0		-0.441	-2.500	-2.132	-4.336	-5.315
78.5		-0.507	-6.720	-7.438	-8.170	-6.192
79.5		-106.736	-85.896	-87.118	-73.348	-82.446
80.5		-11.223	-14.019	-15.085	-26.300	-0.766
81.5		-6.072	-6.809	-8.785	-11.525	-14.508
82.0		0.083	-5.276	1.312	-8.180	-8.880
84.0		-[illegible].411	-7.862	-6.814	-7.505	-7.223
87.0		-0.199	-7.149	-6.089	-6.000	-4.280
89.0		-2.072	-4.034	-6.773	-6.996	-3.013
93.0		-2.320	-2.676	-2.117	-5.408	-0.318
96.0		-2.924	-2.865	-0.828	-2.835	-6.168
100.0		-2.550	-2.750	-1.473	-1.787	-2.705
2.5	(LOWER)	0.236	-0.210	-0.339	-0.603	-0.423
5.0		0.640	0.713	0.313	0.095	-0.026
10.0		0.826	0.537	0.488	0.488	0.121
24.0		0.485	0.606	0.550	0.235	0.150
33.0		0.503	0.475	0.440	0.443	-0.367
54.0		0.523	0.430	0.402	0.144	-4.638
73.5		0.481	0.615	0.506	-1.321	-1.068
84.0		-0.541	-1.813	-6.488	-2.885	-1.371
96.0		0.788	-0.564	-0.667	-0.376	-2.356

RUN 366 POINT 1 ALPHA 0.05 PSI 0.00 HEIGHT 87.54

X/C, %		BP 2	BP 6	BP 12	BP 16	BP 22
0.0	(UPPER)	-0.183	-1.507	-2.817	-4.908	-5.201
2.5		-1.488	-1.580	-2.688	-3.043	-4.525
5.0		-1.670	-1.520	-2.288	-1.852	-2.420
10.0		-1.420	-1.143	-1.526	-2.399	-2.988
15.0		-1.536	-2.115	-1.182	-2.283	-1.889
24.0		-2.081	-1.599	-1.408	-2.875	-2.361
33.0		-1.529	-1.579	-1.837	-2.139	-2.380
54.0		-3.383	-1.949	-2.634	-7.484	-10.080
65.0		-1.286	-3.661	-3.894	-17.333	-2.508
78.5		-1.489	-10.362	-12.341	-11.536	-11.645
79.5		-369.507	-280.304	-234.435	-185.522	-243.710
80.5		-31.787	-34.217	-34.341	-77.688	-2.435
81.5		-11.145	-28.775	-12.159	-25.406	-41.828
82.0		11.812	-4.348	18.210	-13.101	-18.841
84.0		-23.717	-17.522	-10.297	-12.681	-11.167
87.0		5.109	-17.355	-10.442	-8.297	-2.080
89.0		-2.808	-8.984	-14.341	-14.225	2.643
93.0		-4.097	-3.084	-0.143	-10.580	-0.703
96.0		-6.026	-3.581	2.535	-2.322	-11.486
100.0		-11.703	-12.464	-7.587	-8.348	-12.072
2.5	(LOWER)	-0.147	0.164	-0.145	-0.780	0.128
5.0		-0.581	0.247	0.071	-0.445	-0.354
10.0		0.199	0.450	-0.291	0.007	-0.755
24.0		-0.518	-0.149	-0.297	-1.220	-0.548
33.0		-0.338	-0.512	-0.517	-0.307	-0.921
54.0		-0.038	-0.564	-0.578	-1.341	-21.297
73.5		-0.351	-0.261	-0.314	-8.225	-2.754
84.0		-3.809	-8.406	-10.920	-12.891	-4.033
96.0		0.874	-3.971	-4.278	-2.932	-10.935

WING PRESSURE COEFFICIENTS

RUN 366 POINT 2 ALPHA 4.02 PSI 0.00 HEIGHT 87.24

X/C, %	BP 2	BP 6	BP 12	BP 16	BP 22
0.0 (UPPER)	-1.791	-4.168	-5.823	-6.244	-4.383
2.5	-2.345	-2.369	-4.577	-4.037	-3.767
5.0	-2.326	-2.428	-5.031	-4.052	-2.989
10.0	-1.967	-1.868	-2.082	-5.008	-4.230
15.0	-1.991	-2.713	-1.472	-4.417	-2.944
24.0	-2.431	-1.851	-1.772	-3.218	-3.704
33.0	-1.894	-1.981	-2.183	-2.287	-3.549
54.0	-3.732	-2.369	-3.017	-8.265	-10.810
65.0	-1.451	-4.153	-4.425	-18.605	-3.583
78.5	-1.681	-11.451	-13.403	-12.613	-12.897
79.5	-403.427	-303.980	-255.364	-202.241	-266.826
80.5	-34.929	-37.617	-37.806	-85.087	-3.100
81.5	-12.036	-31.474	-13.767	-27.901	-46.605
82.0	12.668	-4.498	19.609	-14.897	-18.731
84.0	-26.146	-19.356	-11.324	-14.352	-12.312
87.0	5.632	-19.640	-11.538	-9.340	-2.149
89.0	-3.047	-7.822	-15.846	-15.775	3.303
93.0	-4.696	-3.557	-0.327	-11.830	-0.776
96.0	-6.874	-4.159	2.641	-2.815	-12.130
100.0	-12.621	-13.474	-8.170	-8.881	-12.953
2.5 (LOWER)	-0.270	0.268	-0.142	-0.897	0.023
5.0	-0.504	0.315	0.115	-0.462	-0.440
10.0	0.359	0.540	-0.297	0.027	-0.847
24.0	-0.486	-0.160	-0.163	-1.304	-0.692
33.0	-0.281	-0.564	-0.553	0.389	-1.107
54.0	-0.002	-0.617	-0.618	-1.496	-23.340
73.5	-0.355	-0.368	-0.382	-8.000	-2.911
84.0	-4.039	-8.953	-11.640	-13.901	-4.285
96.0	0.661	-4.186	-4.545	-3.065	-11.798

RUN 366 POINT 3 ALPHA 8.08 PSI 0.00 HEIGHT 87.02

X/C, %	BP 2	BP 6	BP 12	BP 16	BP 22
0.0 (UPPER)	-4.763	-6.902	-5.351	-6.281	-4.995
2.5	-3.654	-6.610	-4.872	-4.538	-4.693
5.0	-3.185	-7.229	-6.142	-4.570	-3.889
10.0	-2.607	-1.678	-8.081	-5.732	-5.352
15.0	-2.650	-3.063	-5.171	-6.083	-4.021
24.0	-3.097	-2.426	-2.010	-6.816	-5.067
33.0	-2.329	-2.319	-2.038	-4.557	-5.302
54.0	-4.191	-2.768	-3.328	-8.235	-11.385
65.0	-1.670	-4.688	-4.791	-20.175	-5.128
78.5	-1.902	-12.838	-14.718	-13.265	-13.613
79.5	-442.690	-335.989	-281.854	-221.976	-290.732
80.5	-38.373	-41.802	-43.750	-92.821	-3.344
81.5	-13.482	-34.883	-15.005	-30.436	-53.352
82.0	14.116	-5.356	21.392	-15.710	-23.630
84.0	-28.600	-21.620	-12.594	-15.806	-15.788
87.0	6.042	-21.437	-12.786	-10.445	-3.678
89.0	-3.455	-8.721	-17.590	-17.242	2.290
93.0	-5.744	-4.003	0.509	-13.134	-0.920
96.0	-8.339	-4.722	2.789	-3.311	-16.641
100.0	13.813	-14.735	8.861	-9.661	-14.109
2.5 (LOWER)	-0.098	0.136	-0.401	-1.230	-0.232
5.0	-0.440	0.373	0.208	0.571	0.563
10.0	0.422	0.592	-0.262	0.024	-0.939
24.0	-0.520	-0.101	-0.176	-1.402	-0.719
33.0	-0.249	-0.541	-0.603	-0.384	-1.258
54.0	-0.023	-0.651	-0.683	-1.663	-25.832
73.5	-0.555	-0.470	-0.547	-10.010	-3.149
84.0	-4.286	-9.731	-15.493	15.231	-4.577
96.0	0.747	-4.524	-4.875	-3.239	-12.916

WING PRESSURE COEFFICIENTS

RUN 366 POINT 4 ALPHA 12.03 PSI 0.00 HEIGHT 87.05

X/C, %	BP 2	BP 6	BP 12	BP 16	BP 22
0.0 (UPPER)	-8.547	-8.017	-5.889	-7.056	-5.527
2.5	-4.981	-8.321	-5.634	-5.419	-5.261
5.0	-3.798	-10.271	-7.075	-5.446	-4.823
10.0	-3.181	-1.991	-7.834	-6.503	-6.171
15.0	-3.074	-3.202	-7.250	-7.310	-4.923
24.0	-3.423	-2.802	-3.884	-9.096	-6.031
33.0	-2.499	-2.519	-1.862	-6.112	-6.413
54.0	-4.160	-2.895	-3.273	-9.261	-12.003
65.0	-1.695	-4.883	-4.811	-19.818	-8.304
78.5	-1.943	-13.378	-14.701	-12.777	-15.353
79.5	-442.777	-338.077	-284.378	-222.873	-291.950
80.5	-38.295	-42.829	-42.507	-93.169	-3.400
81.5	-13.491	-34.875	-15.788	-30.801	-57.233
82.0	14.029	-6.218	21.006	-15.760	-28.382
84.0	-28.800	-22.194	-13.117	-15.762	-20.348
87.0	6.017	-22.124	-13.587	-10.845	-7.207
89.0	-3.617	-9.208	-18.043	-17.348	-1.303
93.0	-6.298	-4.428	-0.795	-13.447	-0.994
96.0	-9.157	-5.151	2.507	-3.705	-19.531
100.0	-13.769	-14.648	-8.782	-9.568	-14.065
2.5 (LOWER)	-0.136	-0.014	-0.817	-1.492	-0.537
5.0	-0.225	0.498	0.050	-0.643	-0.658
10.0	0.632	0.829	-0.141	0.078	-0.835
24.0	-0.414	0.037	-0.091	-1.356	-0.723
33.0	-0.222	-0.479	-0.488	-0.308	-1.260
54.0	0.025	-0.632	-0.683	-1.676	-25.841
73.5	-0.497	-0.468	-0.553	-10.027	-3.165
84.0	-4.274	-9.661	-19.557	-15.188	-4.574
96.0	0.831	-4.482	-4.814	-3.178	-12.882

RUN 366 POINT 5 ALPHA 16.11 PSI 0.00 HEIGHT 87.11

X/C, %	BP 2	BP 6	BP 12	BP 16	BP 22
0.0 (UPPER)	-12.708	-9.901	-6.845	-7.000	-5.477
2.5	-5.872	-11.142	-6.313	-5.769	-5.271
5.0	-4.410	-13.696	-8.059	-6.009	4.728
10.0	-3.456	-2.733	-10.028	-7.095	-6.153
15.0	-3.291	-3.180	-9.941	-8.636	-5.173
24.0	-3.313	-2.398	-3.840	-10.534	-8.211
33.0	-2.568	-2.399	-2.088	-6.976	-6.464
54.0	-3.704	-2.704	-2.879	-8.455	-10.960
65.0	-1.560	-4.591	-4.364	-17.498	-9.253
78.5	-1.758	-12.892	-13.379	-12.289	-15.688
79.5	-400.028	-307.854	-261.134	-205.640	-287.379
80.5	-34.415	-39.466	-39.522	-85.877	-3.174
81.5	-11.984	-31.775	-15.055	-28.739	-54.755
82.0	12.968	-6.222	18.573	-15.609	-26.905
84.0	-25.624	-20.771	-12.636	-15.166	-21.569
87.0	5.578	20.565	-12.794	-10.447	-8.613
89.0	-3.310	-8.881	-16.913	-16.375	-2.692
93.0	-5.648	-4.583	-1.027	-12.723	-0.988
96.0	-8.241	-5.222	2.022	-3.784	-16.739
100.0	-12.486	-13.261	-7.972	-8.597	-12.652
2.5 (LOWER)	-0.087	-0.203	-0.730	-1.602	-0.756
5.0	-0.020	0.598	-0.065	-0.666	-0.699
10.0	0.666	0.586	-0.087	0.105	-0.799
24.0	-0.228	0.141	0.090	-1.040	-0.518
33.0	-0.091	-0.275	-0.326	-0.168	-1.213
54.0	0.146	-0.468	-0.580	-1.388	-23.474
73.5	-0.323	-0.321	-0.408	-9.206	-2.948
84.0	-3.825	-8.708	-18.289	-13.791	-4.160
96.0	0.825	-4.031	-4.362	-2.875	-11.640

WING PRESSURE COEFFICIENTS

RUN 366 POINT 6 ALPHA 21.96 PSI 0.00 HEIGHT 99.22

X/C. %		BP 2	BP 6	BP 12	BP 16	BP 22
0.0	(UPPER)	-19.058	-11.804	-7.442	-7.246	-5.383
2.5		-6.341	-13.055	-7.630	-6.164	-5.242
5.0		-4.980	-18.442	-8.659	-6.449	-4.756
10.0		-3.870	-4.002	-10.833	-7.196	-6.134
15.0		-3.420	-3.314	-12.000	-8.341	-5.188
24.0		-3.351	-2.418	-5.627	-11.645	-5.814
33.0		-2.529	-2.383	-2.828	-8.686	-5.741
54.0		-3.249	-2.584	-2.613	-7.601	-5.964
65.0		-1.430	4.283	-3.960	-15.833	-8.362
78.5		-1.612	-12.167	-12.333	-11.290	-11.507
79.5		-384.072	-283.348	-243.855	-182.335	-232.985
80.5		-31.217	-37.072	-37.210	-79.797	-2.812
81.5		-10.935	-29.000	-15.051	-27.116	-43.746
82.0		13.058	-6.341	16.732	-14.935	-20.565
84.0		-23.341	-19.688	-12.290	-14.572	-14.812
87.0		5.054	-19.804	-12.370	-10.290	4.718
89.0		-3.018	-8.761	-16.138	-15.384	-0.036
93.0		-4.912	-4.965	-1.429	-12.145	-0.894
96.0		-7.239	-5.691	1.474	-3.963	-14.232
100.0		-11.312	-12.065	-7.188	-7.732	-11.435
2.5	(LOWER)	-0.559	-0.672	1.133	-1.817	-1.034
5.0		-0.104	0.649	-0.132	-0.704	-0.747
10.0		0.848	0.468	0.012	0.184	-0.710
24.0		-0.007	0.327	0.277	-0.815	-0.362
33.0		0.121	-0.064	-0.165	-0.039	-1.081
54.0		0.318	-0.205	-0.325	-1.169	-21.435
73.5		-0.221	-0.141	-0.230	-8.116	-3.638
84.0		-3.402	-7.841	-14.746	-12.514	-3.705
96.0		0.916	-3.574	-3.871	-2.511	-10.587

RUN 367 POINT 27 ALPHA 0.01 PSI 0.00 HEIGHT 88.36

X/C. %		BP 2	BP 6	BP 12	BP 16	BP 22
0.0	(UPPER)	-0.188	-1.001	-2.007	-2.929	-3.958
2.5		-0.765	-1.481	-2.213	-2.165	-3.549
5.0		-0.815	-1.320	-1.447	-1.706	-2.096
10.0		-0.721	-1.114	1.432	-1.508	-1.640
15.0		-0.650	-0.904	-1.386	-1.398	-1.476
24.0		-0.707	-0.829	-1.177	-1.287	-1.370
33.0		-0.955	-0.982	-1.285	-1.399	-1.519
54.0		-2.336	-1.391	-1.811	-4.208	-3.418
65.0		-0.414	-2.268	-2.474	-3.422	-2.377
78.5		-0.423	-7.003	-8.793	-8.623	-9.029
79.5		-194.327	-144.487	-123.284	-101.900	-130.388
80.5		-16.046	-18.830	-18.054	-49.272	-0.267
81.5		-6.503	-3.882	-8.025	-14.089	-21.566
82.0		6.067	-4.636	7.256	-8.221	-9.950
84.0		-13.534	-8.924	-11.073	-7.623	-7.938
87.0		1.536	-9.805	-4.980	-6.184	-3.781
89.0		-2.573	-4.114	-9.645	-8.957	-0.018
93.0		-2.304	-2.041	-0.707	-6.100	-0.399
96.0		-3.045	-2.664	1.250	-1.977	-7.913
100.0		-3.154	-4.350	-3.516	-4.165	-5.049
2.5	(LOWER)	0.136	0.251	0.075	0.239	0.181
5.0		0.089	0.080	-0.029	0.196	0.141
10.0		0.058	0.147	0.076	0.136	0.036
24.0		0.000	0.004	0.059	0.042	-0.110
33.0		0.015	-0.007	-0.033	0.149	-0.485
54.0		0.137	0.154	0.046	0.133	-6.100
73.5		0.362	0.507	0.413	-2.798	-1.095
84.0		-1.681	-2.454	-7.412	-1.845	-2.164
96.0		0.174	-1.542	0.246	-1.544	-2.936

WING PRESSURE COEFFICIENTS

RUN 367 POINT 28 ALPHA 4.02 PSI 0.00 HEIGHT 88.45

X/C. %		BP 2	BP 6	BP 12	BP 16	BP 22
0.0	(UPPER)	-1.415	-3.052	-4.886	-4.147	-2.766
2.5		-1.176	-1.987	-3.567	-3.712	-2.583
5.0		-1.143	-1.839	-2.047	-3.717	-2.523
10.0		-0.983	-1.451	-1.722	-3.428	-2.414
15.0		-0.897	-1.193	-1.855	-1.822	-2.355
24.0		-0.936	-1.044	-1.364	-1.261	-2.224
33.0		-1.108	-1.128	-1.414	-1.424	-2.198
54.0		-2.448	-1.452	-1.900	-4.564	-3.773
65.0		-0.390	-2.335	-2.580	-3.295	-2.289
78.5		-0.408	-7.028	-9.225	-8.987	-9.446
79.5		-194.143	144.379	-124.118	-103.712	-131.874
80.5		-15.870	-18.757	-18.235	-49.598	-0.237
81.5		-6.503	-4.339	-8.239	-14.466	-22.780
82.0		5.955	-4.571	7.249	-8.387	-11.008
84.0		-13.589	-9.083	-11.071	-7.784	-8.874
87.0		1.563	-9.819	-4.970	-6.383	-4.049
89.0		-2.508	-4.205	-9.776	-9.127	-0.181
93.0		-2.327	-2.092	-0.795	-6.235	-0.371
96.0		-3.157	-2.715	1.165	-2.123	-5.105
100.0		-2.994	-4.723	-3.552	-4.125	-5.466
2.5	(LOWER)	0.300	0.382	0.152	0.220	0.177
5.0		0.070	0.226	0.179	0.278	0.163
10.0		0.074	0.310	0.238	0.254	0.087
24.0		0.114	0.107	0.187	0.123	-0.065
33.0		0.090	0.095	0.057	0.200	-0.479
54.0		0.190	0.219	0.087	-0.124	-6.477
73.5		0.399	0.540	0.454	-3.099	-1.173
84.0		-2.018	-2.991	-7.623	-2.078	-2.395
96.0		0.221	-2.326	0.244	-1.712	-3.429

RUN 367 POINT 29 ALPHA 8.02 PSI 0.00 HEIGHT 88.81

X/C. %		BP 2	BP 6	BP 12	BP 16	BP 22
0.0	(UPPER)	-3.567	-5.193	-3.885	-3.503	-3.026
2.5		-2.010	-5.034	-3.979	-3.583	-3.102
5.0		-1.713	-4.444	-4.059	-3.597	-3.072
10.0		-1.341	-1.494	-4.153	-3.783	-3.042
15.0		-1.196	-1.398	-3.779	-3.811	-3.034
24.0		-1.113	-1.240	-1.579	-3.590	-3.095
33.0		-1.330	-1.301	-1.301	-2.647	-3.355
54.0		-2.578	-1.602	-2.001	-5.151	-4.267
65.0		-0.441	-2.602	-2.606	-3.647	-1.687
78.5		-0.455	-7.643	-9.907	-9.673	-10.138
79.5		-203.272	-151.401	-130.796	-107.998	-137.374
80.5		-16.210	-19.503	-18.887	-52.006	-0.357
81.5		-6.660	-4.834	-8.735	-14.909	-25.779
82.0		9.263	-4.887	7.563	-8.815	-13.911
84.0		-14.093	-9.635	-11.571	-8.255	-11.181
87.0		1.728	-10.248	-5.212	-6.856	-5.749
89.0		-2.640	-4.463	-10.361	-9.631	-1.519
93.0		-2.622	-2.315	-1.002	-6.622	-0.410
96.0		-3.586	-2.970	0.910	-2.447	-10.335
100.0		-2.966	-5.261	-4.146	-4.433	-6.096
2.5	(LOWER)	0.453	0.364	0.050	0.112	0.014
5.0		0.246	0.332	0.174	0.281	0.139
10.0		0.230	0.407	0.295	0.309	0.106
24.0		0.193	0.190	0.243	0.176	-0.039
33.0		0.165	0.141	0.114	0.245	-0.477
54.0		0.228	0.241	0.073	-0.107	-7.136
73.5		0.393	0.566	0.436	-2.502	-1.453
84.0		-2.109	-3.552	-8.824	-2.183	-2.606
96.0		0.252	-2.584	0.243	-1.864	-3.972

WING PRESSURE COEFFICIENTS

RUN 307 POINT 30 ALPHA 12.00 PSI 0.00 HEIGHT 87.82

X/C, %		BP 2	BP 6	BP 12	BP 16	BP 22
0.0	(UPPER)	-8.541	-5.856	-4.425	-3.982	-3.330
2.5		-3.060	-6.843	-4.874	-4.195	-3.458
5.0		2.219	-7.523	-4.829	-4.294	-3.560
10.0		-1.785	-1.438	-6.228	-4.488	-3.551
15.0		-1.558	-1.531	-5.867	-5.066	-3.822
24.0		-1.348	-1.378	-2.483	-5.544	-3.804
33.0		-1.514	-1.429	-1.127	-4.080	-4.178
54.0		-2.704	-1.723	-2.317	-5.847	-4.745
65.0		-0.475	-2.782	-2.840	-3.835	-1.718
78.5		-0.565	-6.174	-10.487	-10.226	-10.704
79.5		-211.890	-150.577	-137.080	-113.116	-143.049
80.5		-18.438	-20.813	-20.095	-54.437	-0.350
81.5		-6.786	-5.524	-9.451	-15.441	-28.829
82.0		8.900	-5.180	7.508	-8.078	-17.213
84.0		-14.485	-10.261	-12.234	-8.715	-14.271
87.0		1.976	-10.836	-5.850	-7.258	-7.778
89.0		-2.567	-4.817	-11.064	-10.159	-3.052
93.0		-2.887	-2.576	-1.216	-7.082	-0.437
95.0		-3.002	-3.274	0.766	-2.707	-11.274
100.0		-3.013	-5.738	-4.536	-4.730	-0.461
2.5	(LOWER)	0.435	0.241	-0.001	-0.001	-0.103
5.0		0.280	0.402	0.144	0.212	0.039
10.0		0.286	0.437	0.342	0.327	0.066
24.0		0.254	0.244	0.208	0.282	-0.034
33.0		0.210	0.221	0.160	0.310	-0.534
54.0		0.252	0.255	0.121	-0.138	7.750
73.5		0.342	0.523	0.426	-1.002	-1.718
84.0		-2.045	-3.016	-11.720	-2.263	-2.088
96.0		0.310	-2.780	0.242	-1.896	-4.350

RUN 307 POINT 31 ALPHA 18.01 PSI 0.00 HEIGHT 88.81

X/C, %		BP 2	BP 6	BP 12	BP 16	BP 22
0.0	(UPPER)	-10.202	-7.780	-5.222	-4.278	-3.884
2.5		-4.184	-9.388	-5.882	-4.619	-3.788
5.0		-2.923	-10.298	-3.856	-4.844	-3.848
10.0		-2.249	-2.287	-7.988	-5.101	-4.002
15.0		-1.907	-1.853	-7.984	-6.240	-4.121
24.0		-1.842	-1.523	-2.988	-7.023	-4.310
33.0		-1.887	-1.570	-1.348	-5.038	-4.831
54.0		-2.766	-1.775	-2.442	-5.773	-4.907
65.0		-0.514	-2.852	-2.607	-3.088	-7.406
78.5		-0.539	-6.166	-10.451	-10.195	-10.594
79.5		-210.111	-158.814	-139.500	-116.200	-142.418
80.5		-15.880	-20.447	-20.750	-55.149	-0.317
81.5		-6.552	-5.635	-10.080	-15.943	-29.526
82.0		7.113	-5.223	7.536	-8.478	-17.938
84.0		-14.247	-10.538	-12.491	-9.304	-14.922
87.0		2.101	-11.288	-5.966	-7.756	-7.885
89.0		-2.529	-5.042	-11.380	-10.542	-3.381
93.0		-2.857	-2.847	-1.449	-7.343	-0.460
95.0		-3.022	-3.590	0.548	-2.848	-10.280
100.0		-2.904	-5.880	-4.544	-4.848	-0.375
2.5	(LOWER)	0.328	0.030	-0.314	-0.338	-0.395
5.0		0.308	0.481	0.190	0.134	-0.260
10.0		0.304	0.496	0.360	0.338	0.260
24.0		0.341	0.331	0.300	0.251	-0.016
33.0		0.301	0.298	0.217	0.357	-0.599
54.0		0.279	0.285	0.196	-0.066	-7.838
73.5		0.340	0.547	0.429	-1.282	-1.803
84.0		-1.814	-2.839	-11.076	-2.660	-2.678
96.0		0.385	-2.747	0.281	-1.748	-4.330

WING PRESSURE COEFFICIENTS

RUN 307 POINT 32 ALPHA 21.00 PSI 0.00 HEIGHT 90.32

X/C, %		BP 2	BP 6	BP 12	BP 16	BP 22
0.0	(UPPER)	-10.437	-10.066	-5.806	-4.883	-3.861
2.5		-5.333	-12.026	-6.580	-5.195	-3.940
5.0		-3.984	-14.886	-6.682	-5.431	-4.021
10.0		-2.888	-3.836	-9.867	-5.903	-4.278
15.0		-2.428	-2.098	-9.780	-6.293	-4.398
24.0		-1.839	-1.779	-5.178	-6.874	-4.388
33.0		-1.861	-1.730	-2.234	-6.784	-4.263
54.0		-2.533	-1.879	-2.382	-5.583	-4.754
65.0		-0.547	-2.836	-2.461	-3.383	-6.543
78.5		-0.586	-7.861	-9.733	-9.438	-9.895
79.5		-201.004	-153.707	-137.147	-113.460	-135.882
80.5		-14.811	-20.124	-20.782	-53.783	-0.434
81.5		-6.134	-5.295	-10.818	-15.835	-22.467
82.0		8.787	-5.831	8.512	-9.831	-11.836
84.0		-13.952	-10.586	-12.961	-9.400	-10.913
87.0		1.872	-11.252	-6.236	-8.312	-5.045
89.0		-2.475	-5.256	-11.590	-10.564	-1.524
93.0		-2.751	-3.261	-1.676	-7.430	-0.475
95.0		-3.752	-4.002	0.138	-3.321	-0.518
100.0		-2.753	-5.178	-4.164	-4.270	-5.080
2.5	(LOWER)	0.056	-0.438	-0.001	-0.707	-0.700
5.0		0.374	0.490	-0.029	-0.029	-0.212
10.0		0.512	0.315	0.278	0.329	0.034
24.0		0.415	0.298	0.053	0.288	0.042
33.0		0.325	0.380	0.304	0.424	-0.009
54.0		0.383	0.288	0.257	-0.023	-7.573
73.5		0.383	0.558	0.402	-1.041	-1.757
84.0		-1.475	-3.575	-9.503	-1.728	-2.383
96.0		0.429	-2.309	0.305	-1.473	-3.957

RUN 309 POINT 3 ALPHA 0.01 PSI 0.00 HEIGHT 86.38

X/C, %		BP 2	BP 6	BP 12	BP 16	BP 22
0.0	(UPPER)	-0.044	-0.182	0.403	0.422	0.284
2.5		0.300	0.300	-0.016	-0.230	-0.311
5.0		0.230	0.199	-0.071	-0.215	-0.314
10.0		0.137	0.078	-0.145	-0.236	-0.290
15.0		0.064	0.040	-0.185	-0.327	-0.249
24.0		-0.040	-0.040	-0.175	-0.215	-0.220
33.0		-0.067	-0.102	-0.198	-0.187	-0.223
54.0		0.004	-0.174	-0.253	0.385	0.123
65.0		0.056	-0.270	-0.350	-0.064	-0.356
78.5		0.048	-0.542	-0.535	-0.573	-0.805
79.5		-0.099	-0.498	-0.545	-0.519	-0.850
80.5		-0.521	-0.529	-0.512	-0.829	0.053
81.5		-0.561	0.525	-0.530	-0.549	-0.060
82.0		-0.505	-0.471	-0.226	-0.510	-0.044
84.0		-0.560	-0.517	-0.228	-0.829	-0.598
87.0		-0.524	-0.527	-0.532	-0.831	-0.588
89.0		-0.520	-0.504	-0.535	-0.575	-0.832
93.0		-0.575	-0.523	-0.537	-0.660	0.005
95.0		-0.551	-0.499	-0.505	-0.590	-0.825
100.0		-0.442	-0.654	-0.201	-0.756	-0.828
2.5	(LOWER)	-0.495	-0.360	-0.007	0.080	0.100
5.0		-0.390	-0.195	-0.050	0.071	0.104
10.0		-0.191	-0.211	-0.010	0.068	0.062
24.0		-0.023	-0.007	0.048	0.058	0.067
33.0		0.032	0.087	0.100	0.130	0.050
54.0		0.200	0.210	0.277	0.271	0.183
73.5		0.383	0.475	0.563	0.817	0.041
84.0		0.009	0.753	-0.642	0.023	0.782
96.0		0.377	0.834	0.420	0.579	0.714

C-4

WING PRESSURE COEFFICIENTS

RUN 300 POINT 3 ALPHA 4.04 PSI 0.00 HEIGHT 87.71

X/C %		BP 2	BP 6	BP 12	BP 16	BP 22
0.0	(UPPER)	0.224	0.183	0.102	-0.470	-1.071
2.5		0.104	0.058	-0.422	-0.873	-0.980
5.0		0.114	-0.019	-0.354	-0.532	-0.708
10.0		0.021	-0.083	-0.330	-0.483	-0.560
15.0		-0.079	-0.109	-0.307	-0.380	-0.430
20.0		-0.108	-0.188	-0.277	-0.295	-0.348
30.0		-0.157	-0.244	-0.27	0.261	-0.299
50.0		-0.071	-0.248	-0.331	0.307	0.038
65.0		0.063	-0.333	-0.383	-0.488	-0.330
70.5		0.053	-0.500	-0.544	-0.667	-0.647
75.5		-0.526	-0.531	-0.574	-0.549	-0.666
80.5		-0.548	-0.552	-0.540	-0.864	0.058
81.5		-0.560	0.521	-0.502	-0.560	-0.868
82.0		-0.604	-0.487	-0.240	-0.551	-0.884
84.0		-0.524	-0.547	-0.356	-0.673	-0.630
87.0		-0.548	-0.547	-0.572	-0.674	-0.615
88.0		-0.547	-0.538	-0.560	-0.617	-0.660
93.0		-0.666	-0.563	-0.560	-0.851	0.075
96.0		-0.563	-0.530	-0.595	-0.645	-0.648
100.0		-0.402	-0.464	-0.524	-0.304	-0.660
2.5	(LOWER)	-0.118	-0.080	0.220	0.308	0.440
5.0		-0.087	0.046	0.187	0.294	0.334
10.0		0.085	0.080	0.150	0.238	0.230
20.0		0.058	0.086	0.165	0.158	0.142
30.0		0.195	0.131	0.175	0.210	0.068
50.0		0.250	0.202	0.310	0.307	0.192
70.5		0.450	0.534	0.579	0.823	0.872
80.0		0.584	0.752	0.879	0.949	0.982
96.0		0.382	0.602	0.430	0.556	0.710

RUN 300 POINT 4 ALPHA 8.02 PSI 0.00 HEIGHT 87.82

X/C %		BP 2	BP 6	BP 12	BP 16	BP 22
0.0	(UPPER)	0.000	0.104	-1.046	-2.274	-2.513
2.5		-0.010	-0.260	-0.615	-1.631	-2.010
5.0		-0.065	-0.276	-0.952	-0.980	-1.887
10.0		-0.142	-0.287	-0.554	-0.737	-1.230
15.0		-0.170	-0.304	-0.470	-0.806	-0.700
20.0		-0.234	-0.295	-0.308	-0.680	-0.652
30.0		-0.263	-0.314	-0.368	-0.485	-0.380
50.0		-0.134	-0.221	-0.308	0.381	-0.663
65.0		0.051	-0.295	-0.441	-0.680	-0.395
70.5		0.041	-0.475	-0.564	-0.956	-0.737
75.5		-0.553	-0.540	-0.628	-0.583	-0.807
80.5		-0.560	-0.571	-0.546	-0.680	0.050
81.5		-0.622	-0.512	-0.648	-0.630	-0.810
82.0		-0.617	-0.530	-0.277	-0.664	-0.802
84.0		-0.534	-0.574	-0.368	-0.734	-0.750
87.0		-0.560	-0.564	-0.614	-0.735	-0.710
88.0		-0.573	-0.568	-0.646	-0.887	-0.777
93.0		-0.630	-0.598	-0.638	-0.711	0.600
96.0		-0.612	-0.567	-0.645	-0.702	-0.780
100.0		-0.479	-0.495	-0.554	-0.585	-0.770
2.5	(LOWER)	0.068	0.204	0.402	0.473	0.523
5.0		0.060	0.188	0.344	0.430	0.455
10.0		0.125	0.198	0.280	0.383	0.339
20.0		0.134	0.173	0.233	0.260	0.104
30.0		0.172	0.202	0.243	0.274	0.057
50.0		0.292	0.308	0.353	0.320	0.102
70.5		0.5[illegible]	0.584	0.588	0.822	0.863
80.0		0.5[illegible]	0.755	0.880	0.732	0.843
96.0		0.4[illegible]	0.605	0.433	0.567	0.704

RUN 300 POINT 5 ALPHA 12.05 PSI 0.00 HEIGHT 80.00

X/C %		BP 2	BP 6	BP 12	BP 16	BP 22
0.0	(UPPER)	0.230	-0.722	-3.347	-3.204	-1.422
2.5		-0.230	-0.706	-1.522	-3.020	-1.363
5.0		-0.310	-0.560	-1.199	-3.310	-1.240
10.0		-0.344	-0.519	-0.854	-0.823	-1.334
15.0		-0.352	-0.478	-0.801	-0.614	-1.263
20.0		-0.380	-0.424	-0.541	-0.578	-1.335
30.0		-0.371	-0.418	-0.472	-0.684	-1.263
50.0		-0.242	-0.305	-0.437	0.403	-0.580
65.0		0.605	-0.056	-0.483	-0.481	-0.472
70.5		0.635	-0.000	-0.577	-0.670	-0.743
75.5		-0.593	-0.575	-0.837	-0.614	-0.840
80.5		-0.614	-0.606	-0.885	-0.889	0.043
81.5		-0.606	0.529	-0.610	-0.630	-0.646
82.0		-0.604	-0.335	-0.391	-0.867	-0.842
84.0		-0.582	-0.867	-0.402	-0.737	-0.780
87.0		-0.613	-0.833	-0.833	-0.737	-0.730
88.0		-0.620	-0.861	-0.831	-0.874	-0.786
93.0		-0.693	-0.837	-0.851	-0.710	0.052
96.0		-0.650	-0.580	-0.857	-0.707	-0.770
100.0		-0.564	-0.483	-0.548	-0.650	-0.778
2.5	(LOWER)	0.308	0.634	0.470	0.493	0.560
5.0		0.230	0.342	0.472	0.529	0.501
10.0		0.283	0.368	0.421	0.480	0.415
20.0		0.231	0.279	0.330	0.335	0.267
30.0		0.250	0.285	0.331	0.348	0.040
50.0		0.338	0.354	0.302	0.305	0.210
70.5		0.366	0.624	0.675	0.830	0.587
80.0		0.584	0.750	0.811	0.730	0.830
96.0		0.481	0.457	0.447	0.540	0.704

RUN 300 POINT 6 ALPHA 16.00 PSI 0.00 HEIGHT 87.04

X/C %		BP 2	BP 6	BP 12	BP 16	BP 22
0.0	(UPPER)	-0.012	-3.011	-0.775	-3.804	-1.353
2.5		-0.061	-1.202	-2.233	-3.794	-1.322
5.0		-0.130	-0.931	-1.790	-2.634	-1.297
10.0		-0.512	-0.721	-1.370	-2.077	-1.283
15.0		-0.481	-0.630	-1.074	-2.134	-1.235
20.0		-0.471	-0.531	-0.782	-1.080	-1.237
30.0		-0.490	-0.510	-0.671	-0.717	-1.234
50.0		-0.335	-0.466	-0.549	0.001	-1.015
65.0		0.030	-0.514	-0.578	-0.100	-0.920
70.5		0.020	-0.723	-0.888	-0.722	-0.868
75.5		-0.070	-0.623	-0.888	-0.874	-0.813
80.5		-0.064	-0.652	-0.882	-0.757	0.057
81.5		-0.064	0.532	-0.880	-0.802	-0.910
82.0		-0.710	-0.560	-0.348	-0.885	-0.895
84.0		-0.615	-0.634	-0.498	-0.781	-0.833
87.0		-0.832	-0.630	-0.888	-0.775	-0.760
88.0		-0.630	-0.620	-0.858	-0.710	-0.840
93.0		-0.713	-0.685	-0.881	-0.750	0.040
96.0		-0.681	-0.614	-0.898	-0.748	-0.817
100.0		-0.463	-0.468	-0.573	-0.888	-0.882
2.5	(LOWER)	0.481	0.513	0.418	0.453	0.481
5.0		0.451	0.471	0.563	0.577	0.510
10.0		0.443	0.517	0.532	0.563	0.495
20.0		0.343	0.380	0.427	0.415	0.321
30.0		0.352	0.365	0.398	0.400	0.038
50.0		0.302	0.404	0.435	0.398	0.295
70.5		0.027	0.663	0.840	0.838	0.530
80.0		0.601	0.750	0.848	0.721	0.829
96.0		0.49[illegible]	0.488	0.443	0.540	0.685

WING PRESSURE COEFFICIENTS

RUN 300 POINT 7 ALPHA 22.02 PSI 0.00 HEIGHT 03.00

X/C %		BP 2	BP 8	BP 12	BP 16	BP 22
0.0	UPPER	-0.213	-3.000	-1.000	-1.310	-1.000
2.5		-1.031	-4.373	-2.021	-1.500	-1.407
5.0		-1.270	-3.013	-2.040	-1.513	-1.074
10.0		-0.983	-1.600	-2.100	-1.517	-1.000
15.0		-0.861	-1.020	-2.000	-1.522	-1.000
20.0		-0.730	-0.002	-1.745	-1.500	-1.000
30.0		-0.002	-0.793	-1.355	-1.471	-1.000
40.0		-0.503	-0.041	-0.030	-0.410	-1.000
50.0		-0.012	-0.000	-0.717	-0.010	-0.007
60.0		-0.002	-0.000	-0.000	-0.000	-0.000
70.0		-0.002	-0.011	-0.000	-0.007	-0.003
80.0		-0.003	-0.020	-0.020	-0.070	-0.010
81.0		-0.037	-0.035	-0.020	-0.000	-0.072
82.0		-0.050	-0.715	-0.020	-0.030	-0.033
84.0		-0.012	-0.777	-0.037	-0.032	-0.000
87.0		-0.000	-0.787	-0.770	-0.000	-0.071
90.0		-0.010	-0.700	-0.700	-0.034	-0.002
93.0		-0.070	-0.000	-0.700	-0.050	-0.072
96.0		-0.705	-0.740	-0.703	-0.030	-0.010
100.0		-0.500	-0.572	-0.037	-0.700	-0.700
2.5	LOWER	0.071	0.500	0.445	0.410	0.303
5.0		0.070	0.041	0.002	0.500	0.000
10.0		0.040	0.053	0.017	0.010	0.004
20.0		0.470	0.510	0.510	0.002	0.375
30.0		0.007	0.474	0.000	0.004	0.030
40.0		0.000	0.000	0.477	0.430	0.315
50.0		0.003	0.743	0.000	0.003	0.510
60.0		0.040	0.700	0.057	0.700	0.037
70.0		0.530	0.000	0.430	0.502	0.003

RUN 370 POINT 1 ALPHA 0.02 PSI 0.00 HEIGHT 00.33

X/C %		BP 2	BP 8	BP 12	BP 16	BP 22
0.0	UPPER	-0.430	-0.000	-0.003	-0.000	-0.071
2.5		0.703	0.007	-0.707	-0.713	-1.301
5.0		0.047	0.500	-0.050	-0.050	-0.004
10.0		0.470	0.412	-0.000	0.003	-0.707
15.0		0.320	0.300	-0.700	-0.707	-0.023
20.0		0.072	0.017	-0.500	-0.070	-0.013
30.0		-0.000	-0.103	-0.500	-1.044	-0.040
40.0		-0.212	-0.477	-0.007	0.027	-0.011
50.0		-0.071	-0.000	-0.951	-1.043	-1.107
60.0		-0.000	-3.250	-3.430	-3.307	-3.010
70.0		35.050	-31.042	32.713	-27.270	22.001
80.0		-5.355	-5.015	-5.370	-0.040	-0.003
81.0		-3.217	-2.100	-4.100	-4.007	-5.030
82.0		-1.042	-3.075	-0.750	-3.103	-3.000
84.0		-3.025	-3.000	-3.005	-3.070	-2.000
87.0		-0.500	-3.410	-2.103	-2.030	-1.700
90.0		-0.700	-1.020	-2.001	-2.000	-1.000
93.0		-0.501	-0.041	-1.013	-1.700	-0.030
96.0		-0.750	-0.734	-0.522	-1.170	-2.000
100.0		-0.030	0.131	0.030	0.003	0.150
2.5	LOWER	-0.250	-0.212	-0.000	-0.531	0.212
5.0		-0.270	-0.220	-0.430	-0.000	0.000
10.0		-0.323	-0.300	-0.052	-0.000	-0.003
20.0		0.007	-0.416	-0.430	-0.000	-0.151
30.0		-0.300	-0.422	-0.000	-0.334	-0.031
40.0		-0.123	-0.207	-0.274	-0.232	-0.100
50.0		0.014	-0.041	-0.005	0.000	0.230
60.0		0.077	0.300	2.301	0.315	0.050
70.0		0.122	0.170	0.102	0.300	0.557

WING PRESSURE COEFFICIENTS

RUN 370 POINT 2 ALPHA 4.02 PSI 0.00 HEIGHT 02.95

X/C %		BP 2	BP 8	BP 12	BP 16	BP 22
0.0	UPPER	-0.630	-0.330	-0.977	-1.300	-2.303
2.5		0.753	0.713	-0.001	-0.007	-1.510
5.0		0.304	0.411	-0.001	-0.072	-1.105
10.0		0.415	0.307	-1.002	-0.035	-0.000
15.0		0.270	0.121	-1.000	-0.017	-0.003
20.0		0.037	-0.004	-1.010	-0.070	-0.030
30.0		-0.121	-0.[illegible]	-0.907	-0.900	-0.026
40.0		-0.204	-0.757	-0.077	-0.042	-0.003
50.0		-0.000	-0.001	-1.000	-1.001	-1.025
60.0		-0.005	-3.350	-3.004	-3.210	-3.570
70.0		-35.101	-32.750	-30.007	-35.733	-22.450
80.0		-5.500	-5.250	-5.000	-5.343	-0.005
81.0		-3.435	-3.030	-4.410	-3.000	-5.730
82.0		-1.000	-3.154	-0.907	-2.000	-3.050
84.0		-3.150	-3.201	-3.111	-2.704	-2.749
87.0		-0.747	-2.035	-2.301	-2.400	-1.047
90.0		-0.073	-1.040	-2.000	-2.047	-1.207
93.0		-0.017	-1.075	-1.275	-2.152	-0.041
96.0		-0.501	-0.000	-0.700	-1.500	-1.045
100.0		0.100	0.300	0.241	0.070	-0.017
2.5	LOWER	-0.257	-0.300	-0.432	-0.444	0.320
5.0		-0.301	-0.250	-0.300	-0.305	0.310
10.0		-0.304	-0.343	-0.041	-0.307	0.000
20.0		-0.334	-0.333	-0.330	-0.303	-0.021
30.0		-0.303	-0.333	-0.304	-0.104	-0.075
40.0		0.010	-0.104	-0.110	-0.050	-0.103
50.0		0.050	0.010	0.007	0.377	0.232
60.0		0.100	0.300	2.101	0.307	0.410
70.0		0.344	0.304	0.350	0.301	0.570

RUN 370 POINT 3 ALPHA 7.00 PSI 0.00 HEIGHT 05.02

X/C %		BP 2	BP 8	BP 12	BP 16	BP 22
0.0	UPPER	-1.105	-0.030	-0.052	-1.001	-5.003
2.5		0.002	0.337	-0.015	-1.170	-3.111
5.0		0.507	0.104	-0.000	-0.005	-2.347
10.0		0.300	0.074	-0.073	-0.040	-1.500
15.0		0.101	-0.112	-1.037	-0.030	-1.130
20.0		-0.070	-0.213	-1.700	-0.900	-0.054
30.0		-0.224	-0.200	-1.215	-1.030	-0.032
40.0		-0.270	-0.500	-1.430	0.070	-0.772
50.0		-0.000	-1.134	-1.501	-1.700	-1.445
60.0		-0.103	-3.035	-4.014	-4.270	-4.032
70.0		37.403	-35.540	-34.051	-35.430	-37.730
80.0		-0.007	-0.079	-0.050	-10.773	-0.007
81.0		-3.070	-1.001	-4.041	-4.000	-7.470
82.0		-3.301	-3.015	-1.757	-3.700	-5.302
84.0		-3.710	-3.000	-3.007	-3.510	-3.007
87.0		-1.110	-3.121	-2.007	-3.070	-2.455
90.0		-1.200	-2.030	-3.203	-3.200	-1.032
93.0		-1.200	-1.343	-1.003	-2.003	-0.040
96.0		-1.324	-1.103	-1.032	-1.030	-2.274
100.0		0.101	0.430	0.331	0.323	0.122
2.5	LOWER	-1.111	-0.530	-0.300	-0.030	0.207
5.0		-1.037	-0.430	-0.770	0.044	0.204
10.0		-0.007	-0.000	-0.100	0.121	0.203
20.0		-0.153	-0.110	0.041	0.122	0.175
30.0		0.012	0.013	0.110	0.190	-0.034
40.0		0.700	0.200	0.205	0.200	-0.150
50.0		0.205	0.200	0.507	0.212	0.030
60.0		0.771	0.422	-2.003	0.403	0.205
70.0		0.000	0.015	0.010	0.500	0.250

WING PRESSURE COEFFICIENTS

RUN 370 POINT 4 ALPHA 12.04 PSI 0.00 HEIGHT 86.07

X/C %		DP 2	DP 8	DP 12	DP 16	DP 22
0.0	UPPER	-1.710	-0.473	-0.044	-4.732	-5.007
2.5		0.613	0.121	-0.041	-1.129	-5.207
5.0		0.360	-0.051	-0.001	-1.581	-5.276
10.0		0.102	-0.192	-1.010	-1.333	-3.942
15.0		0.000	-0.304	-1.956	-1.275	-1.935
24.0		-0.244	-0.476	-1.160	-1.394	-1.229
33.0		-0.387	-0.820	-1.261	-1.396	-1.161
54.0		-0.307	-0.862	-1.060	0.147	-1.180
65.0		-0.464	-1.304	-1.974	-2.670	-2.660
78.5		-0.129	-3.900	-4.879	-5.217	-6.507
79.5		-41.053	-40.340	-38.885	-37.263	-34.664
80.5		-6.730	-7.275	-7.406	-13.396	-6.123
81.5		-4.304	-5.630	-5.611	-5.762	-5.604
82.0		-2.710	-4.070	-1.540	-4.763	-7.710
84.0		-4.060	-4.247	-3.953	-4.295	-5.300
87.0		-1.387	-3.435	-3.075	-2.561	-3.570
88.0		-1.614	-2.333	-3.567	-3.534	-3.640
93.0		-1.250	-1.886	-1.777	-3.610	-6.660
96.0		-1.433	-1.330	-1.195	-1.700	-3.710
100.0		0.077	0.357	0.130	0.192	-0.630
2.5	LOWER	-1.580	-0.605	0.043	0.352	0.051
5.0		-0.074	-0.251	0.147	0.380	0.207
10.0		0.253	-0.410	0.300	0.310	0.281
24.0		0.070	0.101	0.326	0.335	0.260
33.0		0.363	0.270	0.379	0.384	-0.051
54.0		0.482	0.600	0.492	0.412	-0.135
73.5		0.454	0.512	0.047	0.584	0.071
84.0		0.486	0.400	-3.300	0.000	0.234
96.0		0.537	0.755	0.045	0.074	0.414

WING PRESSURE COEFFICIENTS

RUN 370 POINT 6 ALPHA 21.08 PSI 0.00 HEIGHT 93.04

X/C %		DP 2	DP 8	DP 12	DP 16	DP 22
0.0	UPPER	-0.140	0.205	-7.412	-8.140	-3.205
2.5		0.276	-0.314	-3.005	-6.254	-2.841
5.0		-0.010	-0.527	-3.000	-7.375	-3.020
10.0		-0.375	-0.674	-1.561	-2.680	-3.933
15.0		-0.430	-0.950	-1.400	-1.881	-4.120
24.0		-0.885	-0.885	-1.334	-1.863	-3.071
33.0		-0.753	-1.012	-1.310	-1.541	-3.283
54.0		-0.811	-1.130	-1.041	0.163	-1.890
65.0		-0.164	-1.750	-2.031	-2.130	-1.940
78.5		-0.217	-4.570	-5.202	-5.825	-5.605
79.5		-47.845	-45.676	-43.530	-42.160	-38.721
80.5		-7.901	-7.906	-7.757	-13.111	-8.231
81.5		-5.370	-1.873	-5.773	-6.237	-6.604
82.0		-3.823	-4.470	-1.886	-5.071	-8.160
84.0		-4.860	-4.860	-3.910	-4.545	-4.472
87.0		-1.980	-3.730	-3.015	-3.543	-2.914
88.0		-1.950	-2.940	-3.474	-3.422	-3.233
93.0		-1.888	-1.717	-1.615	-3.266	-6.161
96.0		-1.876	-1.470	-0.988	-1.379	-3.830
100.0		-0.004	0.160	0.044	0.087	-0.240
2.5	LOWER	-0.342	0.054	0.181	-0.282	-0.350
5.0		-0.120	0.314	0.470	0.314	0.198
10.0		0.153	0.100	0.530	0.374	0.370
24.0		0.270	0.402	0.551	0.517	0.377
33.0		0.440	0.443	0.553	0.553	-0.132
54.0		0.507	0.500	0.580	0.481	-0.000
73.5		0.500	0.605	0.001	0.081	0.130
84.0		0.004	0.503	-3.035	0.047	0.225
96.0		0.081	7.000	0.074	0.760	0.310

RUN 370 POINT 5 ALPHA 16.01 PSI 0.00 HEIGHT 87.22

X/C %		DP 2	DP 8	DP 12	DP 16	DP 22
0.0	UPPER	-1.078	-0.242	-3.714	-7.283	-4.685
2.5		0.480	0.003	-1.022	-3.885	-4.730
5.0		0.236	-0.731	-1.217	-2.861	-5.604
10.0		-0.068	-0.370	-1.183	-1.030	-5.582
15.0		-0.163	-0.560	-1.130	-1.992	-4.070
24.0		-0.416	-0.602	-1.183	-1.430	-1.004
33.0		-0.554	-0.610	-1.230	-1.363	-1.301
54.0		-0.567	-0.975	-1.044	0.145	-1.270
65.0		-0.124	-1.950	-2.022	-2.750	-2.152
78.5		-0.150	-4.200	-5.133	-5.950	-6.750
79.5		-43.363	-43.014	-40.773	-38.980	-35.430
80.5		-7.190	-7.867	-7.600	-13.740	-8.160
81.5		-4.787	-1.863	-5.733	-6.036	-6.050
82.0		-3.130	-4.290	-1.017	-4.930	-7.350
84.0		-4.406	-4.480	-3.955	-4.447	-5.302
87.0		-1.850	-3.610	-3.074	-3.530	-2.570
88.0		-1.784	-2.470	-3.530	-3.057	-2.821
93.0		-1.510	-1.857	-1.716	-3.300	-6.104
96.0		-1.677	-1.421	-1.604	-1.554	-3.723
100.0		-0.163	0.251	0.012	0.052	-0.014
2.5	LOWER	-0.740	-0.252	0.261	0.131	-0.135
5.0		-0.268	0.150	0.440	0.277	0.260
10.0		-0.017	-0.663	0.431	0.090	0.277
24.0		0.183	0.307	0.434	0.412	0.230
33.0		0.304	0.387	0.452	0.400	-0.070
54.0		0.537	0.452	0.530	0.643	-0.105
73.5		0.540	0.831	0.004	0.663	0.115
84.0		0.570	0.540	-3.287	0.783	0.263
96.0		0.573	0.600	0.040	0.730	0.332

RUN 371 POINT 1 ALPHA 0.00 PSI 0.00 HEIGHT 87.47

X/C %		DP 2	DP 8	DP 12	DP 16	DP 22
0.0	UPPER	-0.415	-0.432	-0.047	-1.046	-0.980
2.5		0.050	0.703	-0.074	-0.713	-1.400
5.0		0.054	0.034	-0.021	-0.640	-0.600
10.0		0.511	0.501	-0.011	-0.726	-0.000
15.0		0.356	0.163	-0.014	-0.010	-0.000
24.0		-0.030	0.013	-0.077	-1.030	-0.760
33.0		-0.230	-0.242	-0.543	-1.135	-0.005
54.0		-0.330	-0.602	-0.034	-0.530	-1.770
65.0		-0.340	-1.290	-1.300	-1.013	-1.350
78.5		-0.340	-4.005	-4.370	-4.956	-4.075
79.5		-43.170	-43.000	-41.383	-42.480	-38.233
80.		-7.605	-8.377	-8.383	-16.645	-8.374
81.5		-4.687	-4.540	-5.604	-5.021	-6.730
82.0		-1.104	-3.073	0.101	-3.960	-5.175
84.0		-4.000	-4.240	-3.303	-4.270	-3.512
87.0		-0.305	-3.514	-3.044	-3.287	-1.053
88.0		-1.003	-1.630	-3.700	-3.001	-1.304
93.0		-0.767	-1.051	-1.123	-3.423	-0.133
96.0		-0.834	-1.021	-0.474	-1.307	-3.063
100.0		-0.341	-0.177	-0.002	-0.706	-0.562
2.5	LOWER	-0.457	-0.351	-0.002	-0.000	0.170
5.0		-0.540	-0.300	-0.090	-0.060	-0.030
10.0		-0.333	-0.204	-0.540	-0.493	-0.220
24.0		-0.535	-0.053	-0.547	-0.000	-0.350
33.0		-0.001	-0.535	-0.575	-0.580	-0.071
54.0		-0.333	-0.540	-0.500	-0.015	-1.052
73.5		-0.340	-0.350	-0.031	-0.070	0.112
84.0		-0.073	0.363	-3.130	0.400	0.300
96.0		0.000	-0.010	0.000	0.370	0.540

WING PRESSURE COEFFICIENTS

RUN 371 POINT 2 ALPHA 4.03 PSI 0.00 WEIGHT 87.35

X/C %		BP 2	BP 6	BP 12	BP 16	BP 22
0.0	UPPER	-0.352	-0.[illegible]3	-0.882	-1.000	-1.751
2.5		0.823	0.[illegible]1	-0.783	-1.200	-1.564
5.0		0.801	0.458	-1.116	-1.137	-1.131
10.0		0.483	0.430	-1.271	-1.118	-1.082
15.0		0.213	0.000	-1.154	-1.106	-0.781
24.0		-0.004	-0.023	-1.035	-1.302	-0.042
33.0		-0.248	-0.258	-0.889	-1.104	-0.040
54.0		-0.005	-0.548	-1.020	-0.604	-1.083
65.0		-0.307	-1.247	-1.282	-2.135	-1.224
78.5		-0.251	-4.040	-4.304	-4.213	-4.637
79.5		-64.016	-94.080	-94.057	-41.744	-30.030
80.5		-7.038	-8.723	-8.924	-10.700	-0.250
81.5		-4.175	-4.973	-5.042	-5.504	-8.761
82.0		-1.200	-3.402	-0.000	-3.537	-5.101
84.0		-4.685	-4.560	-3.860	-4.301	-3.560
87.0		-0.270	-2.816	-2.040	-2.739	-1.035
88.0		-1.100	-2.116	-4.203	-4.023	-1.331
93.0		-0.004	-1.216	-1.450	-2.009	-0.131
96.0		-1.000	-1.294	-0.729	-1.050	-3.120
100.0		-0.028	0.154	-0.135	0.157	-0.330
2.5	LOWER	-0.410	-0.283	-0.050	-0.070	0.150
5.0		-0.511	-0.284	-0.536	-0.707	0.000
10.0		-0.282	-0.240	-0.010	-0.544	-0.171
24.0		-0.507	-0.[illegible]	-0.004	-0.004	-0.244
33.0		-0.304	-0.523	-0.613	-0.546	0.000
54.0		-0.125	0.490	-0.494	-0.545	-1.024
73.5		-0.170	-0.246	0.240	-0.004	0.153
84.0		-0.000	0.430	-3.233	0.430	0.440
96.0		0.035	0.100	0.185	0.470	0.505

RUN 371 POINT 3 ALPHA 8.02 PSI 0.00 WEIGHT 87.32

X/C %		BP 2	BP 6	BP 12	BP 16	BP 22
0.0	UPPER	-0.273	-0.3[illegible]	0.003	-1.010	-3.487
2.5		0.757	0.432	-0.770	-1.418	3.201
5.0		0.512	0.240	-1.007	-1.200	-1.543
10.0		0.353	0.230	-1.277	-1.245	-1.305
15.0		0.214	-0.000	-1.271	-1.211	-0.805
24.0		0.177	-0.188	-1.305	-1.308	-1.012
33.0		-0.342	-0.420	-1.251	-1.404	-1.130
54.0		-0.448	-0.835	-1.510	-0.440	-1.000
65.0		-0.204	-1.330	-1.044	-2.243	-1.570
78.5		-0.280	-4.151	-4.044	-4.031	-5.340
79.5		-83.773	-94.000	-93.050	-42.188	-41.000
80.5		-7.837	-8.000	-8.095	-17.403	-0.201
81.5		-4.442	-4.445	-5.070	-6.170	-8.784
82.0		-1.442	-3.710	-0.220	-4.450	-0.130
84.0		-4.910	-4.832	-4.940	-4.013	-4.034
87.0		-0.432	-4.107	-3.102	-4.000	-3.445
88.0		-1.307	-2.300	-4.470	-4.470	-1.772
93.0		-1.080	-1.545	-1.750	-3.512	-0.130
96.0		-1.288	-1.500	-0.090	-2.302	-3.221
100.0		0.160	0.300	0.233	0.071	-0.171
2.5	LOWER	-0.312	-0.211	-0.088	-0.783	0.295
5.0		-0.422	-0.172	-0.542	-0.015	0.177
10.0		-0.177	-0.148	-0.584	-0.440	0.010
24.0		-0.400	-0.300	-0.537	-0.517	-0.077
33.0		-0.267	-0.422	0.518	0.271	0.075
54.0		-0.023	-0.200	0.318	-0.305	-0.050
73.5		-0.112	-0.152	-0.042	0.111	0.170
84.0		0.087	0.594	3.495	0.507	0.490
96.0		0.246	0.334	0.407	0.487	0.581

WING PRESSURE COEFFICIENTS

RUN 371 POINT 4 ALPHA 12.02 PSI 0.00 WEIGHT 88.04

X/C %		BP 2	BP 6	BP 12	BP 16	BP 22
0.0	UPPER	-0.002	-0.224	-1.190	-2.000	-5.782
2.5		0.704	0.244	-0.830	-1.701	-3.077
5.0		0.430	0.015	-1.140	-1.401	-2.790
10.0		0.247	-0.002	-1.224	-1.405	-2.232
15.0		0.007	-0.338	-1.300	-1.302	-1.040
24.0		-0.304	-0.271	-1.432	-1.407	-1.093
33.0		-0.440	-0.003	-1.407	-1.503	-1.510
54.0		-0.424	-0.771	-1.002	-0.427	-1.507
65.0		-0.239	-1.093	-2.040	-2.303	-2.030
78.5		-0.370	-4.004	-5.240	-5.000	-6.354
79.5		-86.120	-94.151	-96.157	-40.050	-44.002
80.5		-8.300	-8.007	-9.050	-10.403	-0.290
81.5		-5.033	-4.490	-6.007	-6.919	-11.000
82.0		-1.070	-0.101	-0.500	-5.150	-7.190
84.5		-5.472	-5.277	-4.711	-5.341	-5.244
87.0		-0.003	-4.545	-3.300	-1.400	-2.910
88.0		-1.004	-3.761	-4.783	-4.700	-2.122
93.0		-1.004	-1.004	-1.003	-3.070	-0.140
96.0		-1.005	-1.781	-1.210	-2.444	-3.282
100.0		0.103	0.430	0.400	0.205	0.000
2.5	LOWER	-0.450	-0.290	-0.710	-[illegible].953	0.215
5.0		-0.515	-0.230	-0.504	-0.[illegible]56	0.287
10.0		-0.237	-0.235	-0.470	-0.157	0.170
24.0		-0.410	-0.294	-0.270	-0.187	0.141
33.3		-0.294	-0.281	-0.170	-0.073	-0.100
54.3		0.207	-0.003	0.072	-0.037	-0.054
73.5		0.031	0.000	0.390	0.187	-0.033
84.0		0.230	0.545	-3.707	0.543	0.348
96.0		0.534	0.710	0.700	0.548	0.120

RUN 371 POINT 5 ALPHA 16.02 PSI 0.00 WEIGHT 88.70

X/C %		BP 2	BP 6	BP 12	BP 16	BP 22
0.0	UPPER	-1.500	0.573	-1.420	-4.500	-6.170
2.5		0.635	0.450	-1.047	-2.583	-5.370
5.0		0.303	0.103	-1.193	-2.1[illegible]	-4.004
10.0		0.152	-0.230	-1.290	-1.782	-4.154
15.0		-0.037	0.571	-1.301	-1.014	-2.000
24.0		-0.415	0.010	-1.458	-1.054	-2.187
33.0		-0.571	-0.030	-1.557	-1.029	-1.000
54.0		-0.340	-0.044	-2.050	-0.330	-1.523
65.0		-0.258	-1.054	-2.314	-2.494	-2.404
78.5		-0.317	-4.717	-5.054	-6.000	-7.154
79.5		-83.740	-95.290	-94.301	-47.402	-48.005
80.5		-8.700	-8.700	-9.023	-10.527	-0.344
81.5		-5.503	-4.244	-6.700	-7.136	-11.012
82.0		-2.507	-4.000	-0.000	-5.415	-7.018
84.0		-5.910	-5.563	-4.831	-5.404	-5.024
87.5		-1.330	-4.031	-3.477	-4.550	-3.290
88.0		-1.003	-3.040	-4.012	-4.725	-3.302
93.0		-1.076	-3.001	-2.005	-3.501	-0.297
95.0		-1.003	-1.000	-1.330	-2.333	-3.240
100.0		-0.130	0.107	-0.024	0.130	0.084
2.5	LOWER	-1.403	-0.493	-0.054	-0.205	-0.070
5.0		-1.279	-0.250	-0.100	0.050	0.231
10.0		-0.535	-0.401	-0.004	0.203	0.200
24.0		0.043	0.113	0.205	0.200	0.244
33.0		0.207	0.224	0.340	0.300	-0.120
54.0		0.540	0.343	0.402	0.240	-0.005
73.5		0.318	0.341	0.525	0.414	-0.053
84.0		0.340	0.830	-3.753	0.723	0.305
96.0		0.549	0.845	0.903	0.001	0.495

WING PRESSURE COEFFICIENTS

RUN 371 POINT 6 ALPHA 22.00 PSI 0.00 HEIGHT 00.20

X/C %		BP 2	BP 6	BP 12	BP 16	BP 22
0.0	UPPER	-1.294	-0.177	-4.000	-0.279	-0.740
2.5		0.400	-0.187	-1.071	-4.487	-0.743
5.0		0.127	-0.500	-1.000	-3.020	-7.003
10.0		-0.115	-0.500	-1.951	-3.000	-6.570
15.0		-0.302	-0.012	-1.410	-2.130	-4.454
20.0		-0.005	-0.021	-1.500	-1.050	-2.705
30.0		-0.304	-1.166	-1.587	-1.575	-2.363
50.0		-0.410	-1.181	-2.134	-0.344	-1.703
60.0		0.300	-1.002	-2.404	-2.001	-2.704
70.5		-0.429	-5.015	-5.010	-6.314	-7.755
75.5		-54.004	-96.270	-94.753	-40.033	-47.040
80.5		-9.552	-10.104	-8.017	-10.004	-9.442
81.5		-0.300	-4.274	-6.775	-7.410	-12.310
82.0		-3.326	-4.070	-0.700	-5.000	-6.231
84.0		-6.552	-5.302	-5.787	-5.941	-5.040
87.0		-1.702	-5.117	-2.400	-4.550	-3.315
90.0		-2.797	-2.207	-4.004	-4.042	-2.353
93.0		-1.500	-2.275	-2.055	-3.250	-0.339
96.0		-2.134	-2.130	-1.314	-2.177	-3.214
100.0		-0.400	-0.000	-0.346	-0.205	-0.001
2.5	LOWER	-0.002	-0.192	0.150	0.001	-0.027
5.0		-0.300	0.232	0.470	0.301	-0.007
10.0		0.002	-0.007	0.502	0.500	0.237
20.0		0.170	0.400	0.514	0.411	0.250
30.0		0.401	0.411	0.404	0.404	-0.340
50.0		0.020	0.202	0.517	0.323	-0.077
70.5		0.000	0.504	0.717	0.570	-0.070
80.0		0.570	0.000	-3.012	0.004	0.301
90.0		0.470	0.700	0.003	0.770	0.205

WING PRESSURE COEFFICIENTS

RUN 372 POINT 2 ALPHA 4.00 PSI 0.00 HEIGHT 07.17

X/C %		BP 2	BP 6	BP 12	BP 16	BP 22
0.0	UPPER	-0.301	-0.450	-0.700	-1.042	-1.400
2.5		0.001	0.703	-0.944	-1.075	-1.004
5.0		0.544	0.402	-0.001	-1.072	-1.203
10.0		0.447	0.570	-0.010	-1.100	-1.430
15.0		0.300	-0.020	-0.072	-1.311	-0.031
20.0		-0.200	-0.020	-0.705	-1.000	-1.132
30.0		-0.002	-0.303	-0.730	-1.000	-1.307
50.0		-0.031	-0.041	-1.415	-1.505	-2.505
60.0		-0.300	-1.503	-1.000	-2.202	-1.000
70.5		-0.407	-4.034	-5.530	-5.675	-6.170
75.5		-111.740	-94.050	-90.200	-72.043	-90.220
80.5		-11.341	-12.335	-12.400	-20.314	-0.500
81.5		-5.004	-0.001	-6.750	-6.312	-13.470
82.0		-0.733	-3.455	1.700	-5.201	-6.000
84.0		-7.204	-6.190	-5.137	-6.200	-4.002
87.0		0.572	-5.501	-2.124	-5.101	-1.002
90.0		-1.270	-2.003	-5.057	-5.554	-0.090
93.0		-1.131	-1.513	-1.326	-2.010	-0.200
96.0		-1.502	-1.700	-0.375	-1.074	-4.407
100.0		-0.575	-0.300	-0.070	-0.314	-1.142
2.5	LOWER	-0.071	-0.304	-0.014	-1.192	0.040
5.0		-0.057	-0.271	-0.002	-0.003	-0.254
10.0		-0.313	-0.395	-0.032	-0.720	-0.510
20.0		-0.751	-0.502	-0.020	-1.000	-0.500
30.0		-0.400	-0.744	-0.000	-0.070	-0.110
50.0		-0.330	-0.002	-0.070	-1.373	-2.033
70.5		-0.500	-0.700	-0.013	-0.100	-0.272
80.0		-0.213	0.530	-4.441	0.430	0.200
90.0		-0.333	-0.137	-0.000	0.047	0.505

RUN 372 POINT 1 ALPHA -0.01 PSI 0.00 HEIGHT 05.00

X/C %		BP 2	BP 6	BP 12	BP 16	BP 22
0.0	UPPER	-0.204	-0.320	-0.701	-1.200	-0.501
2.5		0.000	0.014	-0.070	-0.004	-1.400
5.0		0.575	0.000	-0.205	-0.507	-1.030
10.0		0.511	0.070	-0.403	-0.210	-1.290
15.0		0.257	0.070	-0.103	-0.325	-0.700
20.0		-0.230	0.030	-0.221	-1.253	-1.014
30.0		-0.411	-0.251	-0.000	-1.221	-1.275
50.0		-0.710	-0.071	-1.275	-1.700	-2.700
60.0		-0.415	-1.753	-1.075	-1.030	-1.403
70.5		-0.512	-5.072	-5.700	-5.700	-5.070
75.5		-114.104	-97.232	-91.303	-76.200	-70.042
80.5		-11.054	-12.700	-12.000	-20.020	-0.055
81.5		-5.252	-0.721	-6.031	-6.513	-13.400
82.0		0.554	-3.444	1.005	-5.277	-6.707
84.0		-7.430	-6.307	-4.023	-5.210	-0.049
87.0		0.401	-5.507	-3.011	-4.050	-1.007
90.0		-1.310	-2.502	-5.000	-5.007	-0.000
93.0		-1.150	-1.200	-1.157	-3.442	-0.200
96.0		-1.515	-1.502	-0.310	-1.000	-4.201
100.0		-0.007	-0.050	-1.445	-1.253	-1.320
2.5	LOWER	-0.702	-0.431	-0.010	-1.000	-0.000
5.0		-0.002	-0.204	-0.027	-0.012	-0.357
10.0		-0.333	-0.200	-0.743	-0.000	-0.500
20.0		-0.770	-0.556	-0.704	-1.070	-0.502
30.0		-0.401	-0.735	-0.002	-0.004	-0.137
50.0		-0.300	-0.074	-1.010	-1.300	-2.773
70.5		-0.710	-0.020	-0.003	-0.102	-0.424
80.0		-0.322	0.451	-4.300	0.412	0.155
90.0		-0.315	-0.242	-0.204	0.455	0.554

WING PRESSURE COEFFICIENTS

RUN 372 POINT 3 ALPHA 8.00 PSI 0.00 HEIGHT 00.13

X/C %		BP 2	BP 6	BP 12	BP 16	BP 22
0.0	UPPER	-0.210	-0.300	-0.000	-2.000	-2.277
2.5		0.030	0.021	-0.033	-1.501	-2.000
5.0		0.511	0.240	-1.300	-1.411	-1.421
10.0		0.000	0.400	-1.500	-1.070	-1.500
15.0		0.230	-0.117	-1.237	-1.003	-1.010
20.0		-0.353	-0.100	-1.107	-2.030	-1.220
30.0		-0.500	-0.703	-1.000	-2.122	-1.004
50.0		-0.012	-0.001	-1.003	-1.953	-2.530
60.0		-0.300	-1.004	-1.742	-2.703	-1.033
70.5		-0.605	-4.027	-5.511	-6.000	-6.501
75.5		-112.024	-95.123	-00.020	-73.070	-70.003
80.5		-11.407	-12.004	-12.504	-20.024	-0.570
81.5		-5.204	-0.435	-7.054	-8.737	-14.207
82.0		0.034	-3.710	1.500	-5.050	-7.054
84.0		-7.300	-6.375	-5.000	-6.797	-5.547
87.0		0.500	-5.040	-3.435	-5.700	-2.432
90.0		-1.305	-2.330	-6.267	-6.000	-1.347
93.0		-1.235	-1.730	-1.007	-4.257	-0.204
96.0		-1.042	-1.010	-0.500	-2.401	-5.017
100.0		-0.100	0.020	-0.500	-0.027	-0.057
2.5	LOWER	-0.570	-0.351	-1.130	-1.200	0.137
5.0		-0.001	-0.202	-0.040	-1.103	-0.130
10.0		-0.300	-0.270	-0.074	-1.033	-0.305
20.0		-0.750	-0.002	-0.050	-1.100	-0.370
30.0		-0.457	-0.777	-0.004	-0.052	-0.127
50.0		-0.203	-0.003	-0.007	-1.000	-2.507
70.5		-0.417	-0.573	-0.573	-0.150	-0.230
80.0		-0.000	0.010	-4.030	0.500	0.302
90.0		-0.005	0.055	0.174	0.470	0.037

WING PRESSURE COEFFICIENTS

RUN 372 POINT 4 ALPHA 12.03 PSI 0.00 HEIGHT 86.84

X/C, %		BP 2	BP 6	BP 12	BP 16	BP 22
0.0	(UPPER)	-0.141	-0.299	-1.317	-2.233	-3.170
2.5		0.785	0.422	-1.125	-1.828	-3.413
5.0		0.459	0.007	-1.595	-1.849	-1.880
10.0		0.326	0.267	-1.741	-1.723	-1.713
15.0		0.147	-0.325	-1.556	-1.864	-1.312
24.0		-0.456	-0.264	-1.554	-2.135	-1.393
33.0		-0.826	-0.619	-1.480	-2.252	-1.871
54.0		-0.582	-0.788	-1.982	-1.440	-2.443
65.0		-0.413	-1.743	2.119	-3.661	-2.311
78.5		-0.500	-5.135	-5.956	-6.880	-7.877
79.5		-112.141	-94.723	-80.783	-74.347	-73.940
80.5		-11.788	-12.918	-13.116	-30.324	-0.574
81.5		-5.578	-8.117	-7.010	-9.486	-15.630
82.0		0.294	-4.160	1.118	-6.511	-8.030
84.0		-7.649	-6.875	-6.174	-7.419	-6.742
87.0		0.135	-6.133	-3.857	-6.398	[illegible]
88.0		-1.804	-3.236	-6.668	-6.835	.137
93.0		-1.387	-2.076	-2.035	-5.687	-0.300
96.0		-1.778	-2.243	-0.879	-3.174	-5.302
100.0		0.183	0.388	0.002	-0.179	-0.500
2.5	(LOWER)	-0.487	-0.272	-1.234	-1.389	0.158
5.0		-0.702	-0.224	-0.838	-1.084	-0.032
10.0		-0.222	-0.184	-1.006	-0.798	-0.237
24.0		-0.730	-0.861	-0.954	-1.010	-0.230
33.0		-0.393	-0.758	-0.873	-0.795	-0.173
54.0		-0.950	-0.757	-0.885	-2.784	-2.491
73.5		-0.307	-0.377	-0.250	-0.081	-0.205
84.0		0.077	0.082	-5.513	0.881	0.453
96.0		0.100	0.272	0.457	0.573	0.680

RUN 372 POINT 5 ALPHA 16.05 PSI 0.00 HEIGHT 86.87

X/C, %		BP 2	BP 6	BP 12	BP 16	BP 22
0.0	(UPPER)	-0.128	-0.343	-1.905	-2.010	-4.040
2.5		0.752	0.173	-1.398	-2.064	-3.326
5.0		0.355	-0.100	-1.743	-1.015	-2.456
10.0		0.192	-0.041	-1.878	-1.987	-3.275
15.0		0.000	-0.500	-1.726	-1.961	-1.702
24.0		-0.821	-0.481	-1.834	-2.279	-1.810
33.0		-0.778	-0.637	-1.838	-2.414	-2.074
54.0		-0.581	-0.000	-2.433	-1.540	-2.565
65.0		-0.485	-2.023	-2.576	-3.385	-2.760
78.5		-0.570	-5.571	-6.500	-7.357	-8.432
79.5		-118.022	-100.026	-84.335	-78.432	-76.228
80.5		-12.001	-13.023	-13.997	-31.024	-0.639
81.5		-6.344	-8.487	-8.138	-9.982	-16.534
82.0		-0.257	-4.003	1.011	-6.874	-9.590
84.0		-8.428	-7.405	-6.881	-7.714	-7.042
87.0		-0.151	-6.807	-4.335	-6.562	-3.373
88.0		-1.878	-3.794	-7.754	-7.229	-1.846
93.0		-1.728	-2.530	-2.422	-5.440	-0.363
96.0		2.137	-2.804	-1.324	-3.487	-5.060
100.0		0.040	0.431	0.253	0.032	-0.529
2.5	(LOWER)	-0.508	-0.332	-1.474	-1.420	0.262
5.0		-0.680	-0.229	-1.024	-1.082	0.128
10.0		-0.181	-0.180	-1.041	-0.758	-0.032
24.0		0.083	-0.538	-0.927	-0.878	-0.023
33.0		-0.237	-0.884	-0.868	-0.568	-0.213
54.0		0.064	-0.879	-0.445	-0.484	-2.597
73.5		-0.258	0.260	-0.036	-0.018	-0.224
84.0		0.145	0.754	-5.468	0.784	0.473
96.0		0.358	0.543	0.000	0.634	0.818

WING PRESSURE COEFFICIENTS

RUN 372 POINT 8 ALPHA 21.07 PSI 0.00 HEIGHT 87.05

X/C, %		BP 2	BP 6	BP 12	BP 16	BP 22
0.0	(UPPER)	-0.953	-0.847	-2.526	-3.831	-6.573
2.5		0.883	-0.122	-1.781	-2.806	-5.355
5.0		0.351	-0.483	-2.005	-2.611	-4.570
10.0		0.000	-0.381	-2.060	-2.458	-4.133
15.0		-0.115	-0.583	-1.898	-2.388	-3.105
24.0		-0.790	-0.833	-2.038	-2.560	-2.810
33.0		-0.864	-1.204	-2.110	-2.500	-2.940
54.0		-0.551	-1.373	-2.840	-1.487	-2.580
65.0		-0.602	-2.341	-3.001	-3.202	3.060
78.5		-0.887	-6.331	-7.184	-7.372	-8.120
79.5		-124.914	-105.008	-86.134	-78.859	-76.268
80.5		-14.477	-15.337	-14.545	-31.951	-0.779
81.5		-7.708	-9.563	-8.854	-9.783	-18.095
82.0		-1.588	-5.786	0.894	-6.610	-9.180
84.0		-9.883	-8.387	-7.251	-7.494	-6.881
87.0		-1.247	-7.830	-4.538	-6.343	-2.924
88.0		-2.957	-4.047	-7.613	-6.838	-1.481
93.0		-2.542	-3.240	-2.857	-5.031	-0.501
96.0		-2.900	-3.320	-1.556	-3.127	-4.481
100.0		-0.054	-0.737	-0.317	0.027	-0.412
2.5	(LOWER)	-0.838	-0.857	-1.321	-1.042	-0.143
5.0		-1.083	-0.490	-0.753	-0.828	0.048
10.0		-0.471	-0.483	-0.638	-0.211	0.058
24.0		-0.087	-0.482	-0.287	-0.234	0.120
33.0		-0.351	-0.345	-0.120	0.036	-0.342
54.0		0.543	0.930	0.102	-0.272	-2.629
73.5		0.005	0.143	0.328	0.188	-0.256
84.0		0.331	0.883	-5.011	0.916	0.528
96.0		0.638	1.000	1.004	0.785	0.004

RUN 373 POINT 1 ALPHA 0.03 PSI 0.00 HEIGHT 87.22

X/C, %		BP 2	BP 6	BP 12	BP 16	BP 22
0.0	(UPPER)	-0.487	-0.940	-0.829	-0.140	-0.803
2.5		0.938	1.645	1.445	-0.142	-1.004
5.0		0.412	0.539	0.752	-0.280	-1.128
10.0		0.682	0.948	-0.142	-0.857	-1.078
15.0		0.274	-0.129	0.063	-1.028	-0.913
24.0		-0.005	0.000	-0.238	-1.504	-1.224
33.0		-0.778	-0.541	-0.378	-1.481	-1.783
54.0		-1.020	-0.888	-1.944	-3.850	-4.478
65.0		-0.744	-2.526	-3.484	-2.422	-1.710
78.5		-0.888	-6.913	-6.747	-7.905	-7.518
79.5		-201.495	-174.870	-105.125	-136.013	-126.713
80.5		-18.437	-20.142	-20.041	-93.072	-0.918
81.5		[illegible]	-18.934	-19.127	-13.287	-21.248
82.0		4.548	-3.994	5.283	-7.340	-9.183
84.0		-12.716	-8.588	-9.018	-9.117	-8.720
87.0		2.649	-9.541	-4.380	-7.587	-1.587
88.0		-1.925	-3.900	-10.210	-9.238	0.358
93.0		-2.038	-1.982	-1.372	-5.500	-0.638
96.0		-2.758	2.504	0.257	-2.062	-6.750
100.0		-3.507	-3.884	-3.872	-2.822	-2.830
2.5	(LOWER)	-1.299	-0.747	-2.366	-2.061	0.151
5.0		-1.655	-0.422	-1.507	-1.535	-0.280
10.0		-0.567	-0.418	-1.589	-0.988	-0.588
24.0		-1.300	-0.871	-1.271	-1.333	-0.437
33.0		-0.618	-1.188	-1.250	-0.895	-0.242
54.0		-0.307	-1.450	-1.042	-1.473	-5.715
73.5		-1.078	-1.127	-0.804	-0.358	-1.074
84.0		-0.430	0.957	-0.327	0.979	0.256
96.0		-0.368	-0.406	-0.080	0.741	0.288

WING PRESSURE COEFFICIENTS

RUN 373 POINT 2 ALPHA 4.00 PSI 0.00 HEIGHT 85.07

X/C, %		DP 2	DP 6	DP 12	DP 16	DP 22
0.0	(UPPER)	-0.268	-0.832	-0.962	-1.526	-1.170
2.5		0.920	0.087	0.500	-0.432	-2.215
5.0		0.468	0.487	-0.115	-0.488	-1.480
10.0		0.472	0.073	-0.263	-0.981	-1.878
15.0		0.252	-0.138	0.007	-1.140	-1.110
24.0		-0.040	0.035	-0.318	-1.033	-1.448
33.0		-0.783	-0.505	-0.512	-1.047	-1.912
54.0		-0.862	-0.054	-2.020	-2.400	-4.134
65.0		-0.745	-2.348	-2.400	-2.830	-1.017
78.5		-0.860	-5.482	-8.170	-8.410	-7.919
79.5		-106.282	-174.108	-184.466	-130.075	-130.962
80.5		-17.918	-19.711	-30.217	-53.806	-0.836
81.5		-8.512	-10.713	-8.523	-13.383	-21.567
82.0		5.085	-3.707	5.387	-7.486	-8.086
84.0		-12.115	-8.274	-8.045	-8.122	-7.117
87.0		2.407	-0.384	-4.051	-7.495	-1.848
88.0		-1.005	-3.820	-8.900	-8.078	0.173
93.0		-1.727	-1.880	-1.316	-5.507	-0.368
98.0		-2.512	-2.538	0.200	-2.255	-5.970
100.0		-1.626	-1.946	-3.231	-2.705	-2.635
2.5	(LOWER)	-1.212	-0.885	-1.500	-1.875	-0.168
5.0		-1.002	-0.341	-1.025	-1.505	-0.046
10.0		-0.476	-0.324	-1.282	-1.605	-0.911
24.0		-1.286	-0.002	-1.216	-1.850	-0.840
33.0		-0.828	-1.057	-1.353	-1.530	-0.268
54.0		-0.518	-1.580	-1.864	-2.241	-5.514
73.5		-1.413	1.825	-1.580	-0.226	-0.864
84.0		-0.700	1.050	-0.505	0.710	0.367
98.0		-0.823	-0.580	-0.530	0.751	0.442

RUN 373 POINT 3 ALPHA 8.00 PSI 0.00 HEIGHT 85.10

X/C, %		DP 2	DP 6	DP 12	DP 16	DP 22
0.0	(UPPER)	-0.438	-0.974	-1.100	-2.184	-2.187
2.5		0.913	0.051	-0.446	-1.204	-2.780
5.0		0.335	0.281	-0.861	-1.119	-1.842
10.0		0.205	0.701	-0.930	1.516	-2.163
15.0		0.130	-0.320	-0.467	-1.782	-1.367
24.0		-0.712	-0.095	-0.874	-2.205	-1.740
33.0		-0.816	-0.857	-0.740	-2.240	-2.286
54.0		-0.873	-0.900	-2.117	-3.535	-4.200
65.0		-0.824	2.247	-2.176	-3.017	-2.367
78.5		-0.840	-6.730	-7.760	-8.245	-8.787
79.5		-200.481	-181.444	-168.940	-141.181	-134.745
80.5		-18.856	-20.455	-20.202	-55.564	-0.988
81.5		-8.825	-10.427	-8.482	-13.555	-22.276
82.0		5.306	-3.874	5.864	-7.476	-10.673
84.0		-12.815	-8.838	-8.813	-8.556	-7.766
87.0		2.522	-0.088	-4.176	-7.814	-2.247
88.0		-1.863	-4.168	-10.423	-8.200	0.116
93.0		-1.952	-2.100	-1.482	-5.754	-0.561
98.0		-2.782	-2.787	0.888	-2.560	-7.707
100.0		-1.443	1.000	-2.575	-2.224	-2.682
2.5	(LOWER)	-1.273	-0.726	-1.668	-1.951	-0.163
5.0		-1.030	-0.407	-1.170	-1.638	-0.063
10.0		-0.554	-0.480	-1.430	-1.260	0.005
24.0		-1.432	-0.958	-1.410	-1.850	-0.041
33.0		-0.804	-1.285	-1.555	-1.705	-0.364
54.0		-0.561	-1.717	-1.715	-2.258	5.067
73.5		-1.217	-1.524	-1.452	-0.125	-0.781
84.0		-0.541	1.120	-7.150	0.725	0.405
98.0		-0.873	-0.490	-0.360	0.755	0.452

WING PRESSURE COEFFICIENTS

RUN 373 POINT 4 ALPHA 11.98 PSI 0.00 HEIGHT 86.14

X/C, %		DP 2	DP 6	DP 12	DP 16	DP 22
0.0	(UPPER)	-0.290	-0.775	-1.257	-2.451	-2.400
2.5		0.875	0.070	-1.024	-1.820	-2.760
5.0		0.274	0.186	-1.054	-1.942	-1.832
10.0		0.403	0.637	-1.580	-1.887	-2.126
15.0		0.221	-0.239	-1.020	-2.075	-1.429
24.0		-0.740	-0.143	-1.045	-2.505	-1.760
33.0		-0.898	-0.038	-1.047	-2.074	-2.260
54.0		-0.817	-0.835	-2.129	-3.180	-3.051
65.0		-0.750	-2.163	-2.271	-3.107	-2.080
78.5		-0.879	-6.476	-7.329	-7.881	-9.374
79.5		-200.134	-173.050	-181.457	-134.425	-131.562
80.5		-18.148	-19.737	-19.401	-53.510	-0.845
81.5		-8.520	-10.230	-8.240	-13.236	-23.508
82.0		5.103	-3.800	5.518	-7.862	-11.405
84.0		-12.540	-8.529	-8.430	-8.008	-8.080
87.0		2.237	-0.612	-4.210	-8.183	-2.132
88.0		-1.825	-4.210	-10.214	-9.442	-0.864
93.0		-1.050	-2.300	-1.700	-3.104	-0.416
98.0		-2.612	-2.940	-0.150	-2.982	-6.420
100.0		-0.880	-0.888	-1.875	-1.756	-2.238
2.5	(LOWER)	-1.121	-0.885	-1.741	-1.880	-0.179
5.0		-1.440	-0.440	-1.230	-1.870	-0.530
10.0		-0.474	-0.420	-1.541	-1.704	-0.783
24.0		-1.358	-0.873	-1.446	-1.515	-0.874
33.0		-0.736	-1.298	-1.560	-1.606	-0.336
54.0		-0.209	-1.506	-1.534	-1.952	-5.215
73.5		-0.893	-1.181	-1.136	0.015	-0.614
84.0		-0.361	1.227	-7.070	0.844	0.571
98.0		0.404	-0.176	0.037	0.830	0.637

RUN 373 POINT 5 ALPHA 16.03 PSI 0.00 HEIGHT 87.01

X/C, %		DP 2	DP 6	DP 12	DP 16	DP 22
0.0	(UPPER)	-0.240	-0.040	-1.761	-2.004	-3.004
2.5		0.806	0.301	-1.920	-2.171	-3.448
5.0		0.287	-0.147	-2.204	-2.010	-2.389
10.0		0.307	0.343	-2.226	-2.224	-2.490
15.0		0.070	-0.570	-1.880	-2.542	-1.775
24.0		-0.880	-0.323	-1.001	-3.121	-2.110
33.0		-1.003	-0.867	-1.720	-2.291	-2.087
54.0		-0.502	-1.003	-2.844	-3.015	-3.722
65.0		-0.844	-2.351	-2.707	-4.202	-3.582
78.5		-0.985	-6.879	-7.022	-8.278	-11.790
79.5		-202.000	-175.740	-163.400	-130.950	-130.257
80.5		-18.841	-20.521	-20.301	-55.635	-0.870
81.5		-7.104	-10.080	-10.023	-14.087	-20.720
82.0		4.537	-4.760	4.807	-8.209	-14.184
84.0		-12.930	-10.110	-10.577	-11.144	-10.080
87.0		1.800	-10.108	-4.784	-8.058	-9.257
88.0		-2.112	-4.795	-10.951	-10.879	-2.520
93.0		-2.030	-2.053	-2.111	-7.639	-0.495
98.0		-2.706	-3.510	-0.822	-4.330	-0.664
100.0		-0.212	-0.205	-1.433	-1.510	-2.087
2.5	(LOWER)	-1.150	-0.700	2.130	-2.2[illegible]	0.150
5.0		-1.532	-0.588	-1.504	-1.094	-0.231
10.0		-0.603	-0.511	-1.800	-1.477	-0.530
24.0		-1.515	-1.166	-1.861	-1.615	-0.468
33.0		-0.380	-1.420	-1.712	-1.511	-0.435
54.0		-0.202	-1.605	-1.370	-1.623	-5.053
73.5		-0.735	-0.953	-0.770	0.190	-0.467
84.0		-0.105	1.420	-0.507	1.641	0.784
98.0		0.395	0.083	0.413	1.673	0.887

WING PRESSURE COEFFICIENTS

RUN 373 POINT 0 ALPHA 21.00 PSI 0.00 HEIGHT 98.54

X/C, %		BP 2	BP 6	BP 12	BP 16	BP 22
0.0	(UPPER)	-0.476	-0.062	-3.581	-2.175	-6.427
2.5		0.726	-0.149	-1.051	-2.260	-4.614
5.0		0.329	-0.080	-2.550	-2.082	-3.300
10.0		0.171	-0.100	-2.846	-2.263	-3.181
15.0		-0.067	.043	-2.308	-2.453	-2.333
24.0		-1.005	-0.724	-2.374	-2.001	-2.500
33.0		-1.184	-1.216	-2.311	-2.219	-2.800
54.0		-0.349	-1.233	-2.250	-2.733	-3.447
65.0		-0.888	-2.561	-3.231	-4.422	-3.840
76.5		-1.004	-7.311	-8.834	-9.878	-11.483
79.5		-190.290	-171.616	-150.312	-121.766	-131.430
80.5		-10.312	-21.184	-30.747	-53.004	-1.010
81.5		-7.800	-17.173	-10.002	-14.705	-25.234
82.0		3.281	-5.713	3.007	-9.319	-13.420
84.0		-13.686	-16.743	-11.204	-10.877	-10.750
87.0		0.566	-10.781	-5.461	-[illegible].507	-4.282
89.0		-2.929	-9.571	-11.202	-10.743	-1.500
93.0		-2.617	-2.633	-3.023	-7.702	-0.712
96.0		-3.284	-4.237	-1.305	-4.524	-7.824
100.0		-0.401	-0.137	-0.054	-1.130	-1.107
2.5	(LOWER)	-1.290	-0.081	-2.330	-2.106	0.323
5.0		-1.667	-0.050	-1.700	-1.700	0.000
10.0		-0.730	-0.900	-1.700	-1.215	-0.140
24.0		-1.500	-1.070	-1.450	-1.329	-0.000
33.0		-0.706	1.121	-1.262	-0.001	-0.483
54.0		0.225	-0.050	-0.082	-0.000	-4.701
73.5		-0.500	-0.005	-0.323	0.212	-0.281
84.0		-0.053	1.074	-0.224	1.200	0.081
96.0		0.057	0.2[illegible]6	0.676	1.212	0.813

RUN 374 POINT 1 ALPHA -0.01 PSI 0.00 HEIGHT 87.06

X/C, %		BP 2	BP 6	BP 12	BP 16	BP 22
0.0	(UPPER)	-1.373	-2.266	-0.746	-0.838	-0.123
2.5		0.843	1.141	3.158	0.134	-1.552
5.0		-0.155	0.085	0.114	-0.104	-0.003
10.0		0.312	1.301	-0.516	-1.143	-2.075
15.0		0.130	-0.072	0.213	-1.400	-1.007
24.0		-1.547	-0.957	-0.086	-2.267	-1.732
33.0		-1.750	-1.060	-0.333	-2.305	-2.051
54.0		-1.357	-1.200	-3.157	-7.540	-8.052
65.0		-1.340	-2.051	-3.404	-3.301	-2.185
76.5		-1.588	-10.275	-12.500	-11.267	-10.871
79.5		-423.456	-380.291	-352.600	-291.083	-272.455
80.5		-35.107	-38.000	-37.570	-112.318	-1.345
81.5		-10.226	-41.750	-14.040	-22.000	-40.983
82.0		15.005	-4.242	10.318	10.549	-5.484
84.0		-26.138	-16.004	-18.547	-14.735	-2.110
87.0		5.062	-17.900	-5.950	-12.551	-0.000
89.0		-3.475	-0.288	-10.057	-17.460	4.245
93.0		-4.283	-2.284	-1.120	-0.053	-0.030
96.0		-0.000	-4.116	1.005	2.753	-11.046
100.0		-7.235	-7.116	-0.610	-6.148	-8.309
2.5	(LOWER)	-3.285	-1.002	-0.127	-3.790	-0.074
5.0		-4.030	-1.642	-3.795	-2.020	-1.001
10.0		-1.030	-1.337	-3.270	-1.557	-1.344
24.0		-3.431	-2.014	-2.001	-2.075	-0.704
33.0		-1.504	-2.706	-1.003	-1.[illegible]70	-0.440
54.0		0.200	-1.000	-1.447	-2.779	-1.[illegible]
73.5		-1.772	1.012	-1.272	-0.020	1.[illegible]
84.0		-0.963	2.030	-10.548	1.002	[illegible].247
96.0		-1.003	-0.004	-0.005	1.734	-0.200

WING PRESSURE COEFFICIENTS

RUN 374 POINT 2 ALPHA 3.98 PSI 0.00 HEIGHT [illegible].20

X/C, %		BP 2	BP 6	BP 12	BP 16	BP 22
0.0	(UPPER)	-0.051	-1.054	-1.041	-0.002	-1.330
2.5		0.003	1.000	2.020	-0.000	-2.502
5.0		0.002	0.217	0.212	-0.218	-1.050
10.0		0.442	1.181	-0.213	-1.005	-2.227
15.0		0.260	0.209	0.204	-1.200	-1.221
24.0		-1.132	-0.020	-0.101	-1.975	-1.753
33.0		-1.340	-0.700	-0.267	-2.162	-2.010
54.0		-0.630	-1.102	-2.720	-5.724	-6.052
65.0		-1.001	-2.230	-3.230	-3.140	-2.201
76.5		-1.205	-0.051	-11.957	-10.904	-9.013
79.5		-354.362	-318.348	-298.130	-245.277	-229.382
80.5		-39.297	-32.377	-33.217	-85.087	-1.010
81.5		-5.319	34.290	-15.052	-29.382	-34.201
82.0		13.301	-4.014	12.074	-9.935	-12.004
84.0		-21.375	-14.403	-18.520	-12.004	-10.152
87.0		5.270	-15.077	-5.370	-11.20[illegible]	-1.707
89.0		-7.[illegible]75	-5.000	-17.268	-15.187	2.000
93.0		-3.205	-2.481	-1.256	-6.616	-0.757
96.0		-4.740	-4.111	1.423	-2.517	-10.6[illegible]
100.0		-6.000	-6.062	-0.157	-4.000	-5.010
2.5	(LOWER)	-2.340	-1.210	-4.357	-3.005	0.054
5.0		-3.047	-0.000	-2.760	-2.200	-0.440
10.0		-1.173	-0.070	-3.500	-1.531	-0.000
24.0		-2.517	-1.075	-1.001	-1.952	-0.563
33.0		-1.270	-2.220	-1.700	-1.449	-0.300
54.0		-0.103	-1.070	-1.523	-2.400	-0.442
73.5		-1.540	-1.514	-1.211	0.513	-0.570
84.0		-0.600	2.077	-0.471	1.070	1.390
96.0		-0.034	-0.007	-0.100	1.720	0.02[illegible]

RUN 374 POINT 3 ALPHA 7.99 PSI 0.00 HEIGHT 87.00

X/C, %		BP 2	BP 6	BP 12	BP 16	BP 22
0.0	(UPPER)	-0.001	-1.040	-1.042	-1.722	-2.137
2.5		0.057	0.070	1.551	-0.100	-3.400
5.0		0.002	0.000	0.000	-0.000	-2.335
10.0		0.310	0.041	-0.5[illegible]	-1.304	-2.020
15.0		0.155	-0.024	-0.120	-1.734	[illegible].730
24.0		-1.205	0.105	-0.[illegible]	-2.237	[illegible].206
33.0		-1.040	0.004	-0.[illegible]	-2.500	-3.120
54.0		-0.202	1.212	-3.1[illegible]	-5.026	-6.000
65.0		-1.274	-3.411	-3.[illegible]	-3.150	2.770
76.0		-1.002	-0.304	-13.1[illegible]	2.000	-1.150
79.5		-382.557	-345.050	-325.656	-272.150	-250.021
80.5		-30.037	-34.[illegible]	-38.170	-104.050	-1.109
81.5		-8.375	-37.[illegible]	-15.245	-22.700	-38.130
82.0		15.305	-4.025	12.000	-11.410	-14.005
84.0		-32.070	-15.324	-10.[illegible]	-14.352	-11.735
87.0		8.[illegible]	-17.100	-6.211	-12.567	2.010
89.0		2.202	-6.330	-10.005	-16.002	2.007
93.0		-2.016	-2.724	-1.512	-0.025	-0.041
96.0		4.745	-4.550	1.302	-3.035	-12.241
100.0		-8.000	-7.370	-8.130	-6.530	-5.039
2.5	(LOWER)	-3.273	[illegible]	-3.307	3.020	-0.221
5.0		-3.370	-0.[illegible]	-2.379	-2.025	-0.000
10.0		-0.015	-0.[illegible]	-2.053	-2.037	-1.204
24.0		-2.340	-1.300	-2.311	-2.522	-1.000
33.0		-1.075	-1.000	-2.475	-2.151	-0.400
54.0		-0.025	-2.570	-3.300	-3.287	-0.00[illegible]
73.5		-2.633	-2.542	-1.070	0.004	-0.270
84.0		-1.357	2.003	-10.731	1.301	1.705
96.0		-1.415	-1.347	-0.074	1.009	0.074

WING PRESSURE COEFFICIENTS

RUN 374 POINT 4 ALPHA 12.05 PSI 0.00 HEIGHT 87.70

X/C, %		SP 2	SP 8	SP 12	SP 16	SP 22
0.0	(UPPER)	-0.725	-1.317	-1.660	-2.518	-2.477
2.5		0.661	0.950	0.589	-0.967	-2.764
5.0		-0.011	0.012	-0.387	-0.942	-2.633
10.0		0.757	1.038	-0.463	-1.534	-2.952
15.0		0.181	-0.633	0.070	-1.701	1.878
24.0		-1.252	-0.687	-0.337	-2.420	-2.730
33.0		-1.545	-0.957	-0.643	-2.758	-3.218
54.0		0.088	-1.173	-3.035	-5.510	-6.546
65.0		-1.205	-3.661	-3.370	-3.867	-3.077
75.5		-1.961	-8.079	-10.867	-12.573	-11.522
78.5		-309.152	-344.612	-318.447	-270.304	-292.280
80.5		-31.048	-24.079	-33.870	-104.494	-1.195
81.5		-8.075	-36.541	-13.316	-32.381	-30.240
72.0		15.480	-3.800	14.731	-11.024	-15.261
64.0		-22.082	-15.386	-17.275	-14.502	-11.870
87.0		6.262	-18.843	-5.966	-12.362	-2.330
88.0		-2.258	-5.226	-10.115	-15.814	2.804
93.0		-2.881	-5.058	-1.272	-8.206	-1.121
96.0		-4.840	-4.456	1.516	-3.295	-12.507
100.0		-4.141	-3.186	-6.825	-5.825	-5.447
2.5	(LOWER)	2.268	-1.251	-2.880	-3.142	-0.494
5.0		-2.903	-0.745	-1.956	-2.826	-1.010
10.0		-0.881	-0.775	-2.380	-2.861	-1.412
24.0		-2.300	-1.429	-2.210	-2.752	-1.313
33.0		-1.126	-2.054	-2.486	-2.516	-0.700
54.0		-0.963	-2.881	-2.080	-3.879	-0.487
73.5		-2.507	-2.757	-2.457	0.083	0.168
84.0		-1.344	3.104	-11.000	1.280	1.718
96.0		-1.481	-1.270	-0.928	1.083	0.182

RUN 374 POINT 5 ALPHA 16.04 PSI 0.00 HEIGHT 85.77

X/C, %		SP 2	SP 8	SP 12	SP 16	SP 22
0.0	(UPPER)	-0.536	-1.381	-1.572	-3.040	[illegible]
2.5		0.837	0.700	-0.980	2.004	3.264
5.0		0.130	-0.646	-1.795	2.600	-2.350
10.0		0.701	0.830	-1.682	-5.382	-2.677
15.0		0.245	-0.511	-0.780	-2.560	-1.820
24.0		-1.900	-0.121	-0.790	-2.023	-2.200
33.0		-1.280	-0.800	-0.832	-2.270	-3.131
54.0		0.537	-1.618	-2.008	-4.218	-3.140
65.0		-1.187	-3.600	-2.760	-3.774	-3.510
75.5		-1.280	-8.123	-9.280	-10.335	-12.190
78.5		-326.250	-283.800	-271.756	-229.170	-230.362
80.5		-37.088	-29.482	-30.074	-88.558	-7.680
81.5		-7.487	-30.490	-11.671	-16.415	-35.832
82.0		12.754	-3.981	12.188	-10.001	-15.727
84.0		-10.588	-12.431	-15.820	-13.670	-12.280
87.0		5.130	-10.950	-4.500	-11.260	-3.480
88.0		-2.134	-5.794	-15.004	-12.800	1.052
93.0		-2.523	-3.820	-1.504	-8.545	-1.000
96.0		-4.026	-4.174	0.832	-3.517	-12.832
100.0		-3.227	-2.757	-3.888	-3.497	-3.820
2.5	(LOWER)	1.863	-1.002	-2.558	-2.766	-0.837
5.0		-2.433	-0.780	-1.864	-2.202	-1.118
10.0		-0.888	-0.730	-2.138	-2.000	-1.350
24.0		-2.141	-1.414	-2.143	-2.550	-1.121
33.0		-1.050	-1.670	-2.300	-2.248	-0.530
54.0		-0.784	-2.488	-2.381	-3.056	-7.560
73.5		-1.788	-2.020	-1.818	0.843	0.381
84.0		-0.799	2.007	-11.005	1.227	1.074
96.0		-1.101	-0.741	-0.248	1.507	0.437

WING PRESSURE COEFFICIENTS

RUN 374 POINT 6 ALPHA 22.07 PSI 0.00 HEIGHT 90.07

X/C, %		SP 2	SP 8	SP 12	SP 16	SP 22
0.0	(UPPER)	-0.825	-1.788	-2.434	-3.060	-3.250
2.5		0.700	0.110	-1.073	-2.875	-2.087
5.0		-0.101	-0.087	-2.090	-2.757	-2.047
10.0		0.246	0.488	-2.023	-3.278	-3.262
15.0		0.043	-0.027	-1.024	-3.530	-2.482
24.0		-1.410	-0.310	-1.060	-4.007	-2.063
33.0		-1.730	-1.174	-1.015	-4.250	-3.000
54.0		0.792	-1.281	-3.523	-4.830	-5.810
65.0		-1.574	-3.108	-3.411	-5.034	-4.071
75.5		-1.710	-9.250	-10.700	-13.030	-10.044
78.5		-301.375	-344.020	-317.577	-268.240	-266.103
80.5		-31.056	-34.007	-33.001	-105.403	-1.451
81.5		-8.056	-35.004	-13.040	-33.763	-49.403
82.0		15.190	-4.830	14.352	-12.834	-21.103
84.0		-23.500	-15.941	-19.260	-16.590	-18.060
87.0		5.027	-18.043	-6.107	-14.344	-8.200
89.0		-2.585	-7.245	-10.102	-17.040	-0.834
93.0		-3.147	-3.503	-2.200	-11.253	-1.400
96.0		-4.795	-5.531	0.535	-5.270	-10.700
100.0		-3.318	-3.016	-3.050	-3.041	-4.107
2.5	(LOWER)	-2.300	-1.531	-2.190	-3.504	-1.002
5.0		-3.118	-1.230	-2.021	-3.104	-1.430
10.0		-1.303	-1.118	-2.972	-2.835	-1.004
24.0		-2.032	-2.087	-2.040	-3.200	-1.260
33.0		-1.040	-2.503	-2.054	-2.825	-0.877
54.0		-0.724	-2.010	-2.000	-3.330	-8.050
73.5		-1.033	-2.144	-1.085	0.784	0.372
84.0		-0.770	3.300	-15.050	1.482	1.904
96.0		-1.150	-0.636	-0.021	1.043	0.505

RUN 375 POINT 7 ALPHA -0.03 PSI 0.00 HEIGHT 18.75

X/C, %		SP 2	SP 8	SP 12	SP 16	SP 22
0.0	(UPPER)	0.000	0.042	0.340	0.350	0.060
2.5		0.230	0.186	-0.303	-0.453	-0.592
5.0		0.105	0.104	-0.181	-0.303	-0.520
10.0		0.153	-0.072	-0.231	-0.300	-0.310
15.0		0.033	-0.010	-0.267	-0.290	-0.395
24.0		0.006	-0.160	-0.240	-0.181	-0.232
33.0		-0.056	-0.132	-0.354	-0.102	-0.167
54.0		-0.140	-0.211	-0.352	0.017	0.053
65.0		0.103	-0.290	-0.324	-0.364	-0.340
75.5		0.134	-0.478	-0.400	-0.504	-0.047
78.5		-0.512	-0.551	-0.442	-0.057	-0.500
80.5		-0.426	-0.337	-0.405	-0.411	0.182
81.5		-0.347	0.303	-0.473	-0.549	-0.410
82.0		-0.231	-0.583	-0.313	-0.602	-0.552
84.0		-0.511	-0.352	-1.012	-0.410	-0.732
87.0		-0.536	-0.470	-0.[illegible]	-0.430	-0.001
89.0		-0.507	-0.517	-0.543	-0.505	-0.835
93.0		-0.572	0.534	-0.546	-0.543	0.000
96.0		-0.530	0.505	-0.501	-0.501	-0.675
100.0		-0.438	-0.468	-0.503	-0.570	-0.001
2.5	(LOWER)	-0.166	-0.210	0.000	0.201	0.255
5.0		-0.073	-0.073	0.052	0.202	0.300
10.0		-0.001	-0.142	0.007	0.110	0.174
24.0		0.040	0.020	0.115	0.175	0.000
33.0		0.044	0.100	0.182	0.101	0.053
54.0		0.306	0.275	0.327	0.330	0.013
73.5		0.450	0.520	0.501	0.040	0.740
84.0		0.494	0.952	-0.027	0.760	0.740
96.0		0.395	0.304	0.404	0.420	0.337

WING PRESSURE COEFFICIENTS

RUN 375 POINT 3 ALPHA -0.07 PSI 0.00 HEIGHT 33.82

X/C, %		BP 2	BP 6	BP 12	BP 16	BP 22
0.0	(UPPER)	-0.013	-0.075	0.378	0.413	0.355
2.5		0.264	0.214	-0.129	-0.340	-0.300
5.0		0.224	0.141	-0.134	-0.323	-0.434
10.0		0.120	0.004	-0.181	-0.263	-0.266
15.0		0.057	0.004	-0.241	-0.235	-0.333
24.0		0.020	-0.005	-0.220	-0.148	-0.210
33.0		-0.040	-0.116	-0.230	-0.177	-0.186
54.0		-0.140	-0.204	-0.245	0.007	0.056
65.0		0.001	-0.283	-0.334	-0.242	-0.339
78.5		0.100	-0.463	-0.502	-0.600	-0.655
79.5		-0.495	-0.542	-0.443	-0.667	-0.610
80.5		-0.418	-0.334	-0.475	-0.436	0.177
81.5		-0.342	0.167	-0.455	-0.557	-0.424
82.0		-0.320	-0.341	-0.287	-0.000	-0.500
84.0		-0.494	-0.272	-1.000	-0.425	-0.746
87.0		-0.531	-0.405	-0.501	-0.440	-0.813
89.0		-0.566	-0.511	-0.555	-0.595	-0.850
93.0		-0.585	-0.518	-0.549	-0.552	0.040
96.0		-0.527	-0.550	-0.505	-0.500	-0.001
100.0		-0.440	-0.472	-0.506	-0.501	-0.811
2.5	(LOWER)	-0.237	-0.300	0.001	0.518	0.185
5.0		-0.122	-0.125	-0.015	0.141	0.155
10.0		-0.134	-0.210	0.043	0.070	0.121
24.0		0.008	-0.014	0.074	0.136	0.077
33.0		0.003	0.071	0.120	0.161	0.030
54.0		0.174	0.242	0.301	0.323	0.002
73.5		0.426	0.507	0.586	0.634	0.732
84.0		0.451	0.524	0.635	0.753	0.733
96.0		0.256	0.373	0.300	0.429	0.334

RUN 375 POINT 4 ALPHA -0.03 PSI 0.00 HEIGHT 65.78

X/C, %		BP 2	BP 6	BP 12	BP 16	BP 22
0.0	(UPPER)	-0.007	-0.187	0.357	0.475	0.387
2.5		0.275	0.241	-0.098	-0.285	-0.321
5.0		0.231	0.185	-0.111	-0.291	-0.390
10.0		0.130	0.024	-0.178	-0.247	-0.247
15.0		0.085	0.017	-0.230	-0.223	-0.317
24.0		0.035	-0.070	-0.222	-0.144	-0.215
33.0		-0.037	-0.113	-0.242	-0.175	-0.187
54.0		-0.148	-0.203	-0.251	0.004	0.047
65.0		0.077	-0.284	-0.331	-0.249	-0.345
78.5		0.002	-0.523	-0.518	-0.613	-0.670
79.5		-0.503	-0.548	-0.430	-0.600	-0.615
80.5		-0.418	-0.347	-0.482	-0.440	0.172
81.5		-0.351	0.188	-0.472	-0.555	-0.424
82.0		-0.218	-0.580	-0.300	-0.615	-0.591
84.0		-0.488	-0.278	-1.013	-0.429	-0.763
87.0		-0.537	-0.482	-0.507	-0.446	-0.826
89.0		-0.587	-0.518	-0.568	-0.608	-0.871
93.0		-0.568	-0.523	-0.562	-0.567	0.039
96.0		-0.5[illegible]	-0.584	-0.521	-0.604	-0.714
100.0		-0.457	-0.480	-0.520	-0.604	-0.637
2.5	(LOWER)	-0.203	-0.387	-0.070	0.154	0.128
5.0		-0.167	-0.170	-0.068	0.092	0.104
10.0		-0.171	-0.288	0.005	0.031	0.092
24.0		-0.023	-0.046	0.045	0.106	0.053
33.0		-0.031	0.046	0.101	0.139	0.025
54.0		0.150	0.224	0.286	0.311	0.000
73.5		0.406	0.491	0.513	0.632	0.726
84.0		0.430	0.522	-0.863	0.747	0.729
96.0		0.233	0.361	0.380	0.421	0.333

WING PRESSURE COEFFICIENTS

RUN 375 POINT 5 ALPHA 0.03 PSI 0.00 HEIGHT 87.22

X/C, %		BP 2	BP 6	BP 12	BP 16	BP 22
0.0	(UPPER)	-0.508	-0.214	0.340	0.485	0.387
2.5		0.277	0.245	-0.087	-0.278	-0.304
5.0		0.233	0.172	-0.098	-0.278	-0.378
10.0		0.140	0.030	-0.185	-0.238	-0.242
15.0		0.060	0.023	-0.223	-0.216	-0.308
24.0		0.033	-0.067	-0.219	-0.145	-0.212
33.0		-0.033	-0.110	-0.236	-0.173	-0.195
54.0		-0.137	-0.203	-0.250	0.005	0.058
65.0		0.078	-0.284	-0.331	-0.248	-0.341
78.5		0.004	-0.483	-0.518	-0.610	-0.585
79.5		-0.493	-0.553	-0.452	-0.671	-0.675
80.5		-0.415	-0.325	-0.500	-0.428	0.181
81.5		-0.328	0.200	-0.417	-0.552	-0.440
82.0		-0.226	-0.508	-0.310	-0.604	-0.583
84.0		-0.480	-0.274	-1.000	-0.423	-0.747
87.0		-0.521	-0.480	-0.497	-0.450	-0.813
89.0		-0.577	-0.513	-0.563	-0.605	-0.868
93.0		-0.555	-0.517	-0.558	-0.560	0.032
96.0		-0.523	-0.556	-0.518	-0.601	-0.710
100.0		-0.440	-0.481	-0.518	-0.601	-0.834
2.5	(LOWER)	-0.294	-0.490	-0.068	0.137	0.114
5.0		-0.178	-0.175	-0.063	0.078	0.090
10.0		-0.175	-0.275	-0.005	0.023	0.005
24.0		-0.027	-0.049	0.030	0.088	0.052
33.0		-0.035	0.038	0.093	0.130	0.028
54.0		0.147	0.219	0.280	0.300	0.098
73.5		0.200	0.480	0.587	0.635	0.720
84.0		0.429	0.518	-0.855	0.751	0.735
96.0		0.236	0.355	0.388	0.420	0.335

RUN 376 POINT 1 ALPHA 0.02 PSI 0.00 HEIGHT 10.22

X/C, %		BP 2	BP 6	BP 12	BP 16	BP 22
0.0	(UPPER)	0.072	0.042	0.328	0.290	0.000
2.5		0.226	0.139	-0.222	-0.361	-0.545
5.0		0.194	0.087	-0.188	-0.407	-0.528
10.0		0.102	-0.041	-0.224	-0.307	-0.303
15.0		0.032	-0.021	-0.233	-0.266	-0.378
24.0		0.017	-0.107	-0.255	-0.140	-0.231
33.0		-0.052	-0.135	-0.266	-0.184	-0.170
54.0		-0.472	-0.222	-0.243	0.057	-0.257
65.0		0.103	-0.288	-0.320	-0.344	-0.382
78.5		0.128	-0.487	-0.478	-0.595	-0.656
79.5		-0.503	-0.582	-0.402	-0.605	-0.617
80.5		-0.385	-0.250	-0.502	-0.340	0.230
81.5		-0.274	-0.173	-0.465	-0.524	-0.318
82.0		-0.123	-0.020	-0.201	-0.598	-0.515
84.0		-0.496	-0.186	-1.182	-0.349	-0.774
87.0		-0.594	-0.460	-0.482	-0.387	-0.881
89.0		-0.606	-0.518	-0.555	-0.588	-0.841
93.0		-0.573	-0.525	-0.550	-0.538	0.043
96.0		-0.521	-0.574	-0.499	-0.583	-0.694
100.0		-0.437	-0.470	-0.505	-0.583	-0.602
2.5	(LOWER)	-0.188	-0.224	0.075	0.294	0.220
5.0		-0.075	-0.082	0.032	0.190	0.202
10.0		-0.118	-0.158	0.093	0.198	0.178
24.0		0.044	0.016	0.112	0.180	0.094
33.0		0.013	0.082	0.151	0.190	0.036
54.0		0.182	0.287	0.316	0.332	0.052
73.5		0.455	0.524	0.585	0.488	0.606
84.0		0.479	0.868	-0.834	0.823	0.800
96.0		0.277	0.376	0.387	0.421	0.314

WING PRESSURE COEFFICIENTS

RUN 376 POINT 2 ALPHA 0.00 PSI 0.00 HEIGHT 22.82

X/C, %	BP 2	BP 6	BP 12	BP 16	BP 22
0.0 (UPPER)	-0.045	-0.000	0.355	0.402	0.239
2.5	0.257	0.188	-0.180	-0.374	-0.417
5.0	0.214	0.121	-0.154	-0.310	-0.481
10.0	0.122	-0.014	-0.188	-0.218	-0.271
15.0	0.044	-0.008	-0.271	-0.244	-0.354
24.0	0.021	-0.101	-0.246	-0.145	-0.249
33.0	-0.042	-0.128	-0.282	-0.178	-0.191
54.0	-0.463	-0.222	-0.245	0.855	-0.356
65.0	0.081	-0.202	-0.328	-0.352	-0.364
78.5	0.105	-0.479	-0.495	-0.816	-0.675
79.5	-0.588	-0.573	-0.427	-0.717	-0.634
80.5	-0.397	-0.275	-0.520	-0.387	0.188
81.5	-0.277	-0.182	-0.456	-0.553	-0.341
82.0	-0.138	-0.833	-0.306	-0.814	-0.542
84.0	-0.488	-0.210	-1.187	-0.374	-0.789
87.0	-0.527	-0.463	-0.507	-0.403	-0.893
89.0	-0.598	-0.517	-0.571	-0.808	-0.866
93.0	-0.568	-0.522	-0.583	-0.558	0.026
98.0	-0.524	-0.578	-0.514	-0.804	-0.708
100.0	-0.458	-0.481	-0.523	-0.607	-0.823
2.5 (LOWER)	-0.261	-0.328	-0.012	0.217	0.150
5.0	-0.143	-0.150	-0.039	0.133	0.142
10.0	-0.188	-0.237	0.035	0.054	0.127
24.0	-0.005	-0.039	0.065	0.135	0.061
33.0	-0.031	0.051	0.112	0.154	0.015
54.0	0.146	0.232	0.288	0.313	0.846
73.5	0.417	0.488	0.581	0.488	0.804
84.0	0.433	0.855	-0.845	0.814	0.581
98.0	0.233	0.357	0.374	0.412	0.316

RUN 376 POINT 3 ALPHA -0.03 PSI 0.00 HEIGHT 65.63

X/C, %	BP 2	BP 6	BP 12	BP 16	BP 22
0.0 (UPPER)	-0.003	-0.201	0.338	0.479	0.384
2.5	0.295	0.218	-0.118	-0.310	0.323
5.0	0.222	0.148	-0.127	-0.306	-0.404
10.0	0.128	0.000	-0.102	-0.253	-0.242
15.0	0.046	0.000	-0.265	-0.229	-0.336
24.0	0.028	-0.095	-0.242	-0.138	-0.220
33.0	-0.037	-0.121	-0.260	-0.178	-0.187
54.0	-0.468	-0.218	-0.248	0.851	-0.365
65.0	0.068	-0.292	-0.333	-0.355	-0.387
78.5	0.093	-0.486	-0.510	-0.625	-0.892
79.5	-0.501	-0.589	-0.417	-0.718	-0.547
80.5	-0.398	-0.282	-0.524	-0.381	0.139
81.5	-0.276	-0.181	-0.474	-0.545	-0.356
82.0	-0.130	-0.843	-0.428	-0.817	-0.557
84.0	-0.488	-0.190	-1.206	-0.398	-0.832
87.0	-0.528	-0.468	-0.517	-0.412	-0.637
89.0	-0.594	-0.522	-0.580	-0.817	-0.884
93.0	-0.582	-0.524	-0.571	-0.588	0.018
98.0	-0.521	-0.577	-0.523	-0.814	-0.729
100.0	-0.485	-0.492	-0.530	-0.615	-0.845
2.5 (LOWER)	-0.310	-0.400	-0.081	0.150	0.097
5.0	-0.183	-0.192	-0.087	0.082	0.091
10.0	-0.204	-0.290	-0.005	0.013	0.087
24.0	-0.033	-0.089	0.035	0.103	0.061
33.0	-0.064	0.025	0.080	0.128	0.005
54.0	0.122	0.212	0.270	0.300	0.843
73.5	0.398	0.476	0.567	0.485	0.596
84.0	0.408	0.849	-0.888	0.809	0.588
98.0	0.218	0.340	0.368	0.406	0.316

WING PRESSURE COEFFICIENTS

RUN 376 POINT 4 ALPHA -0.02 PSI 0.00 HEIGHT 66.87

X/C, %	BP 2	BP 6	BP 12	BP 16	BP 22
0.0 (UPPER)	-0.118	-0.227	0.328	0.489	0.385
2.5	0.258	0.223	-0.105	-0.285	-0.310
5.0	0.218	0.147	-0.122	-0.298	-0.395
10.0	0.127	0.005	-0.187	-0.252	-0.244
15.0	0.052	0.012	-0.252	-0.279	-0.333
24.0	0.025	-0.082	-0.242	-0.145	-0.227
33.0	-0.041	-0.125	-0.286	-0.181	-0.203
54.0	-0.473	-0.225	-0.253	0.838	-0.373
65.0	0.063	-0.298	-0.330	-0.364	-0.370
78.5	0.035	-0.499	-0.521	-0.632	-0.701
79.5	-0.517	-0.583	-0.421	-0.719	-0.880
80.5	-0.389	-0.287	-0.538	-0.380	0.189
81.5	-0.285	-0.188	-0.468	-0.571	-0.350
82.0	-0.153	-0.843	-0.329	-0.636	-0.573
84.0	-0.486	-0.201	-1.205	-0.388	-0.803
87.0	-0.547	-0.468	-0.531	-0.438	-0.908
89.0	-0.603	-0.531	-0.585	-0.626	-0.895
93.0	-0.575	-0.535	-0.579	-0.584	0.016
98.0	-0.534	-0.583	-0.531	-0.821	-0.740
100.0	-0.471	-0.503	-0.538	-0.623	-0.880
2.5 (LOWER)	-0.322	-0.421	-0.107	0.127	0.078
5.0	-0.203	-0.205	-0.113	0.083	0.074
10.0	-0.212	-0.305	-0.023	0.000	0.073
24.0	-0.048	-0.080	0.023	0.081	0.030
33.0	-0.077	0.017	0.077	0.115	0.001
54.0	0.112	0.203	0.267	0.288	0.832
73.5	0.382	0.473	0.550	0.468	0.581
84.0	0.403	0.838	-0.881	0.804	0.581
98.0	0.215	0.335	0.365	0.401	0.312

RUN 377 POINT 1 ALPHA -0.03 PSI 0.00 HEIGHT 19.29

X/C, %	BP 2	BP 6	BP 12	BP 16	BP 22
0.0 (UPPER)	-0.008	-0.013	0.281	0.303	0.049
2.5	0.190	0.068	-0.281	-0.497	-0.528
5.0	0.188	0.028	-0.247	-0.484	-0.582
10.0	0.082	-0.110	-0.277	-0.321	-0.272
15.0	-0.015	-0.055	-0.378	-0.272	-0.437
24.0	0.018	-0.143	-0.312	-0.122	-0.256
33.0	-0.042	-0.152	-0.340	-0.181	-0.188
54.0	-0.708	-0.284	-0.239	0.860	-1.393
65.0	0.089	-0.309	-0.322	-0.380	-0.439
78.5	0.132	-0.446	-0.440	-0.838	-0.721
79.5	-0.517	-0.643	-0.323	-0.833	-0.848
80.5	-0.325	-0.107	-0.511	-0.179	0.347
81.5	-0.065	-1.378	-0.410	-0.508	-0.027
82.0	0.183	-0.740	-0.432	-0.882	-0.457
84.0	-0.475	0.098	-1.869	-0.185	-0.875
87.0	-0.534	-0.447	-0.502	-0.200	-1.128
89.0	-0.859	-0.539	-0.803	-0.827	-0.885
93.0	-0.574	-0.538	-0.583	-0.539	0.008
98.0	-0.513	-0.833	-0.500	-0.609	-0.750
100.0	-0.487	-0.513	-0.552	-0.619	-0.827
2.5 (LOWER)	-0.206	-0.283	0.031	0.288	0.138
5.0	-0.110	-0.176	-0.044	0.165	0.158
10.0	-0.219	-0.245	0.065	0.043	0.157
24.0	0.014	-0.058	0.085	0.183	0.053
33.0	-0.082	0.042	0.114	0.176	-0.034
54.0	0.088	0.242	0.293	0.282	0.848
73.5	0.438	0.507	0.593	0.329	0.154
84.0	0.432	0.881	-0.703	0.250	0.169
98.0	0.168	0.318	0.331	0.381	0.262

WING PRESSURE COEFFICIENTS

RUN 377 POINT 2 ALPHA 0.02 PSI 0.00 HEIGHT 32.77.

X/C, %		BP 2	BP 6	BP 12	BP 16	BP 22
0.0	(UPPER)	-0.108	-0.135	0.271	0.417	0.218
2.5		0.208	0.082	-0.247	-0.441	-0.448
5.0		0.180	0.049	-0.215	-0.432	-0.545
10.0		0.096	-0.089	-0.249	-0.313	-0.284
15.0		0.002	-0.028	-0.365	-0.270	-0.432
24.0		0.012	-0.145	-0.313	-0.125	-0.258
33.0		-0.050	-0.160	-0.344	-0.183	-0.211
54.0		-0.674	-0.278	-0.258	0.050	-1.323
65.0		0.065	-0.326	-0.344	-0.367	-0.480
78.5		0.110	-0.483	-0.478	-0.878	-0.763
79.5		0.554	-0.639	-0.347	-0.904	-0.681
80.5		-0.564	-0.095	-0.523	-0.224	0.315
81.5		-0.115	-1.411	-0.400	-0.588	-0.086
82.0		0.160	-0.782	-0.398	-0.871	-0.510
84.0		-0.510	0.059	-1.865	-0.211	-0.958
87.0		-0.552	-0.470	-0.506	-0.231	-1.170
89.0		-0.678	-0.564	-0.637	-0.664	-0.724
93.0		-0.588	-0.564	-0.611	-0.578	-0.009
96.0		-0.540	-0.657	-0.533	-0.648	-0.792
100.0		-0.501	-0.542	-0.579	-0.661	-0.668
2.5	(LOWER)	-0.288	-0.384	-0.055	0.219	0.074
5.0		-0.167	-0.232	-0.115	0.110	0.104
10.0		-0.273	-0.319	0.004	-0.005	0.113
24.0		-0.038	-0.112	0.032	0.138	0.022
33.0		-0.146	-0.010	0.080	0.130	-0.057
54.0		0.049	0.186	0.252	0.278	0.837
73.5		0.406	0.473	0.571	0.342	0.127
84.0		0.390	0.639	-0.698	0.242	0.142
96.0		0.152	0.294	0.320	0.368	0.258

RUN 377 POINT 3 ALPHA 0.00 PSI 0.00 HEIGHT 65.50

X/C, %		BP 2	BP 6	BP 12	BP 16	BP 22
0.0	(UPPER)	-0.158	-0.240	0.282	0.489	0.344
2.5		0.216	0.123	-0.208	-0.380	-0.358
5.0		0.185	0.072	-0.188	-0.381	-0.489
10.0		0.105	-0.084	-0.284	-0.284	-0.238
15.0		0.018	-0.031	-0.357	-0.258	-0.414
24.0		0.020	-0.146	-0.316	-0.121	-0.258
33.0		-0.044	-0.156	-0.341	-0.191	-0.212
54.0		-0.866	-0.273	-0.280	0.641	-1.276
65.0		0.048	-0.328	-0.356	-0.396	-0.511
78.5		0.082	-0.495	-0.481	-0.881	-0.775
79.5		-0.529	-0.712	-0.373	-0.874	-0.883
80.5		-0.365	-0.124	-0.537	-0.224	0.315
81.5		-0.088	-1.431	-0.458	-0.562	-0.088
82.0		0.188	-0.785	-0.442	-0.882	-0.567
84.0		-0.488	0.064	-1.880	-0.240	-0.928
87.0		-0.547	-0.490	-0.510	-0.282	-1.171
89.0		-0.674	-0.573	-0.848	-0.878	-0.750
93.0		-0.586	-0.565	-0.625	-0.584	-0.023
96.0		-0.545	-0.856	-0.551	-0.686	-0.820
100.0		-0.512	-0.551	-0.589	-0.673	-0.688
2.5	(LOWER)	-0.347	-0.458	-0.137	0.147	0.011
5.0		-0.221	-0.278	-0.182	0.050	0.046
10.0		-0.304	-0.376	-0.038	-0.052	0.085
24.0		-0.068	-0.150	0.055	0.107	0.005
33.0		-0.170	-0.046	0.044	0.105	-0.078
54.0		0.023	0.180	0.236	0.251	0.519
73.5		0.380	0.453	0.585	0.337	0.117
84.0		0.365	0.627	-0.723	0.228	0.130
96.0		0.132	0.274	0.308	0.358	0.252

WING PRESSURE COEFFICIENTS

RUN 377 POINT 4 ALPHA -0.02 PSI 0.00 HEIGHT 87.20

X/C, %		BP 2	BP 6	BP 12	BP 16	BP 22
0.0	(UPPER)	-0.177	-0.284	0.249	0.512	0.383
2.5		0.231	0.142	-0.177	-0.338	-0.315
5.0		0.198	0.084	-0.170	-0.357	-0.452
10.0		0.114	-0.063	-0.206	-0.283	-0.216
15.0		0.008	-0.038	-0.330	-0.234	-0.388
24.0		0.026	-0.113	-0.281	-0.110	-0.235
33.0		-0.036	-0.143	-0.329	-0.188	-0.193
54.0		-0.850	-0.286	-0.239	0.636	-1.238
65.0		0.054	-0.311	-0.339	-0.381	-0.489
78.5		0.101	-0.471	-0.472	-0.869	-0.758
79.5		-0.531	-0.665	-0.323	-0.821	-0.650
80.5		-0.334	-0.124	-0.534	-0.236	0.317
81.5		-0.071	-1.392	-0.424	-0.585	-0.086
82.0		0.171	-0.768	-0.428	-0.889	-0.483
84.0		-0.478	0.081	-1.822	-0.229	-0.936
87.0		-0.528	-0.463	-0.483	-0.264	-1.181
89.0		-0.649	-0.543	-0.623	-0.658	-0.727
93.0		-0.588	-0.541	-0.602	-0.575	0.000
96.0		-0.522	-0.628	-0.529	-0.642	-0.787
100.0		-0.484	-0.530	-0.570	-0.648	-0.684
2.5	(LOWER)	-0.337	-0.466	-0.142	0.139	0.003
5.0		-0.208	-0.277	-0.172	0.048	0.048
10.0		-0.292	-0.376	-0.040	-0.043	0.070
24.0		-0.065	-0.136	0.004	0.106	0.004
33.0		-0.168	-0.037	0.048	0.108	-0.060
54.0		0.035	0.180	0.238	0.252	0.618
73.5		0.378	[illegible]	0.563	0.337	0.119
84.0		0.363	0.621	-0.706	0.231	0.138
96.0		0.144	0.283	0.317	0.371	0.282

RUN 378 POINT 1 ALPHA 0.00 PSI 0.00 HEIGHT 18.51

X/C, %		BP 2	BP 6	BP 12	BP 16	BP 22
0.0	(UPPER)	-0.187	-0.148	0.096	0.338	0.019
2.5		0.085	-0.115	-0.460	-0.645	-0.602
5.0		0.097	-0.112	-0.393	-0.649	-0.767
10.0		0.036	-0.278	-0.375	-0.401	-0.274
15.0		-0.088	-0.105	-0.588	-0.328	-0.613
24.0		0.019	-0.272	-0.451	-0.067	-0.327
33.0		-0.082	-0.242	-0.515	-0.215	-0.245
54.0		-0.889	-0.386	-0.264	0.190	-2.552
65.0		0.032	-0.481	-0.375	-0.466	-0.683
78.5		0.120	-0.482	-0.426	-0.791	-0.908
79.5		-0.588	-0.848	-0.282	-1.302	-0.744
80.5		-0.283	0.200	-0.810	-0.022	0.537
81.5		0.237	-3.980	-0.310	-0.585	0.442
82.0		0.758	-1.088	-0.618	-0.884	-0.186
84.0		-0.505	0.581	-3.183	0.068	-1.266
87.0		-0.638	-0.445	-0.550	0.057	-1.882
89.0		-0.833	-0.648	-0.757	-0.762	-0.832
93.0		-0.858	0.632	-0.720	-0.587	-0.077
96.0		-0.575	-0.811	-0.588	-0.729	-0.937
100.0		-0.582	-0.841	-0.686	-0.761	-0.739
2.5	(LOWER)	-0.275	-0.427	-0.076	0.287	-0.028
5.0		-0.160	-0.378	-0.231	0.108	0.054
10.0		-0.444	-0.442	-0.006	-0.081	0.121
24.0		-0.072	0.229	-0.012	0.175	-0.055
33.0		-0.327	-0.081	0.015	0.105	-0.177
54.0		-0.107	0.174	0.200	0.221	0.144
73.5		0.412	0.451	0.578	0.084	0.154
84.0		0.338	0.153	-0.828	-0.642	-0.812
96.0		-0.008	0.130	0.217	0.301	0.150

WING PRESSURE COEFFICIENTS

RUN 378 POINT 2 ALPHA -0.02 PSI 0.00 HEIGHT 32.52

X/C, %		BP 2	BP 6	BP 12	BP 16	BP 22
0.0	(UPPER)	-0.240	-0.228	0.195	0.481	0.229
2.5		0.141	-0.041	-0.343	-0.529	-0.458
5.0		0.140	-0.055	-0.284	-0.547	-0.858
10.0		0.080	-0.209	-0.314	-0.341	-0.210
15.0		-0.049	-0.040	-0.523	-0.278	-0.532
24.0		0.078	-0.181	-0.387	-0.043	-0.271
33.0		0.024	-0.207	-0.472	-0.188	-0.213
54.0		-0.877	-0.358	-0.233	0.180	-2.318
65.0		0.048	-0.383	-0.350	-0.425	-0.858
78.5		0.139	-0.434	-0.404	-0.748	-0.858
79.5		0.529	-0.801	-0.228	-1.210	-0.700
80.5		0.285	0.217	-0.593	0.068	0.500
81.5		0.244	-3.033	-0.258	-0.490	0.428
82.0		0.743	-1.121	-0.804	-0.783	-0.400
84.0		-0.490	0.559	-3.100	0.138	-1.188
87.0		-0.544	-0.409	-0.488	0.089	-1.812
89.0		-0.784	-0.810	-0.719	-0.719	-0.788
93.0		-0.811	-0.584	-0.675	-0.585	-0.070
96.0		-0.537	-0.783	-0.538	-0.686	-0.092
100.0		-0.557	-0.804	-0.855	-0.720	-0.704
2.5	(LOWER)	-0.316	-0.485	-0.112	0.239	-0.063
5.0		-0.223	-0.381	-0.238	0.084	0.034
10.0		-0.484	-0.447	-0.035	-0.107	0.111
24.0		-0.082	-0.240	-0.014	0.188	-0.034
33.0		-0.334	-0.087	0.031	0.109	-0.171
54.0		-0.103	0.172	0.210	0.238	0.141
73.5		0.389	0.438	0.584	0.159	0.080
84.0		0.320	0.182	-0.734	-0.821	-0.709
96.0		-0.002	0.182	0.231	0.320	0.178

RUN 378 POINT 3 ALPHA -0.02 PSI 0.00 HEIGHT 65.71

X/C, %		BP 2	BP 6	BP 12	BP 16	BP 22
0.0	(UPPER)	-0.274	-0.320	0.130	0.580	0.382
2.5		0.188	-0.009	-0.332	-0.455	-0.358
5.0		0.151	-0.060	-0.275	-0.490	-0.587
10.0		0.106	-0.207	-0.292	-0.304	-0.177
15.0		-0.089	-0.054	-0.489	-0.253	-0.508
24.0		0.058	-0.188	-0.388	-0.038	-0.261
33.0		-0.038	-0.192	-0.453	-0.181	-0.188
54.0		-0.872	-0.344	-0.223	0.171	-2.233
65.0		0.040	-0.358	-0.335	-0.424	-0.855
78.5		0.132	-0.429	-0.404	-0.754	-0.863
79.5		-0.521	-0.777	-0.253	-1.185	-0.693
80.5		-0.238	0.249	-0.821	0.005	0.500
81.5		0.284	-3.795	-0.324	-0.559	0.394
82.0		0.745	-1.087	-0.828	-0.815	-0.474
84.0		-0.488	0.571	-3.047	0.123	-1.210
87.0		-0.506	-0.444	-0.490	0.186	-1.808
89.0		-0.772	-0.603	-0.718	-0.718	-0.782
93.0		-0.588	-0.580	-0.678	-0.573	-0.087
96.0		-0.534	-0.750	-0.534	-0.688	-0.894
100.0		-0.553	-0.815	-0.850	-0.712	-0.711
2.5	(LOWER)	-0.408	-0.532	-0.198	0.185	-0.100
5.0		-0.216	-0.415	-0.294	0.038	-0.003
10.0		-0.479	-0.508	-0.068	-0.137	0.083
24.0		-0.118	-0.252	-0.030	0.144	-0.053
33.0		-0.342	-0.126	0.001	0.103	-0.177
54.0		-0.124	0.148	0.182	0.210	0.148
73.5		0.375	0.411	0.574	0.188	0.140
84.0		0.305	0.166	-0.732	-0.810	-0.785
96.0		-0.011	0.178	0.230	0.321	0.181

WING PRESSURE COEFFICIENTS

RUN 378 POINT 4 ALPHA 0.02 PSI 0.00 HEIGHT 87.40

X/C, %		BP 2	BP 6	BP 12	BP 16	BP 22
0.0	(UPPER)	-0.303	-0.352	0.117	0.557	0.370
2.5		0.195	-0.025	-0.327	-0.436	-0.342
5.0		0.182	-0.033	-0.285	-0.482	-0.581
10.0		0.087	-0.181	-0.299	-0.307	-0.174
15.0		-0.059	-0.065	-0.508	-0.252	-0.501
24.0		0.034	-0.211	-0.390	-0.043	-0.270
33.0		-0.027	-0.199	-0.471	-0.145	-0.201
54.0		-0.884	-0.341	-0.223	0.158	-2.209
65.0		0.032	-0.381	-0.335	-0.428	-0.053
78.5		0.129	-0.430	-0.402	-0.780	-0.850
79.5		-0.538	-0.779	-0.175	-1.179	-0.888
80.5		-0.205	0.190	-0.589	0.089	0.532
81.5		0.275	-3.835	-0.382	-0.503	0.422
82.0		0.724	-1.072	-0.852	-0.777	-0.397
84.0		-0.485	0.582	-3.013	0.035	-1.138
87.0		-0.575	-0.384	-0.444	0.053	-1.590
89.0		-0.758	-0.585	-0.719	-0.721	-0.781
93.0		-0.582	-0.581	-0.677	-0.578	-0.137
96.0		-0.521	-0.741	-0.538	-0.686	-0.086
100.0		-0.549	-0.814	-0.842	-0.718	-0.718
2.5	(LOWER)	-0.410	-0.535	-0.194	0.168	-0.116
5.0		-0.283	-0.420	-0.283	0.020	-0.021
10.0		-0.481	-0.515	-0.070	-0.158	0.000
24.0		-0.127	-0.288	-0.043	0.121	-0.059
33.0		-0.376	-0.117	0.003	0.077	-0.192
54.0		-0.131	0.149	0.195	0.204	0.128
73.5		0.351	0.432	0.568	0.138	0.184
84.0		0.292	0.168	-0.744	-0.812	-0.757
96.0		-0.017	0.185	0.229	0.321	0.184

RUN 379 POINT 2 ALPHA 0.01 PSI 0.00 HEIGHT 19.27

X/C, %		BP 2	BP 6	BP 12	BP 16	BP 22
0.0	(UPPER)	-1.372	-1.083	-1.403	-0.357	-1.854
2.5		0.582	0.173	-0.290	-1.023	-1.831
5.0		0.871	0.295	-0.214	-1.103	-2.045
10.0		0.547	-0.006	-0.375	-0.805	-1.118
15.0		0.219	0.121	-0.864	-0.781	-1.053
24.0		0.254	-0.281	-0.813	-0.486	-1.149
33.0		0.001	-0.395	-1.014	-0.794	-1.087
54.0		-1.882	-1.004	-1.944	-1.311	-3.985
65.0		0.102	-1.858	-1.818	-2.214	-2.253
78.5		0.283	-5.002	-8.086	-7.606	-5.501
79.5		-181.803	-167.787	-150.812	-130.805	-111.833
80.5		-15.391	-15.938	-17.572	-48.852	1.171
81.5		-2.821	-9.189	-8.152	-11.300	-14.080
82.0		9.225	-3.945	8.118	-8.249	-5.435
84.0		-11.288	-5.183	-15.128	-4.950	-5.990
87.0		2.469	-7.788	-2.438	-4.041	-3.242
89.0		-1.702	-3.205	-9.322	-8.009	1.428
93.0		-1.571	-1.175	-0.802	-4.370	-0.014
96.0		-2.380	-2.227	1.171	-1.430	-5.172
100.0		-0.140	1.159	1.240	0.543	-0.730
2.5	(LOWER)	-0.881	-1.070	-1.198	-0.511	-0.771
5.0		-0.959	-1.379	-1.229	-0.821	-0.388
10.0		-1.513	-1.330	-0.776	-0.784	-0.053
24.0		-0.748	-1.200	-0.753	-0.091	-0.288
33.0		-1.275	-1.042	-0.717	-0.358	-0.327
54.0		-1.037	-0.831	-0.773	-0.754	-1.248
73.5		-0.107	0.117	0.497	-0.268	-0.433
84.0		0.665	-1.103	-0.303	-0.310	-1.808
96.0		0.784	0.624	0.804	0.464	-0.420

WING PRESSURE COEFFICIENTS

RUN 379 POINT 3 ALPHA -0.02 PSI 0.00 HEIGHT 22.73

X/C, %		BP 2	BP 6	BP 12	BP 16	BP 22
0.0	(UPPER)	-1.300	-1.000	-0.954	0.900	-0.701
2.5		0.583	0.152	0.322	-0.549	-1.732
5.0		0.885	0.271	0.000	-0.879	-1.000
10.0		0.504	0.010	-0.279	-0.713	-0.875
15.0		0.214	0.211	-0.000	-0.710	-1.518
24.0		0.300	-0.231	-0.040	-0.302	-1.957
33.0		0.095	-0.300	-1.073	-0.727	-1.007
54.0		-2.003	-1.105	-1.042	-1.007	-4.550
65.0		-0.051	-1.817	-1.012	-2.200	-2.482
78.5		0.131	-5.410	-7.406	-8.012	-7.000
79.5		-100.274	-178.600	-100.036	-130.255	-123.500
80.5		-16.190	-17.032	-10.004	-50.002	1.002
81.5		-2.783	-10.136	-8.003	-12.277	-17.707
82.0		0.026	-4.415	0.046	-8.047	-8.030
84.0		-11.550	-5.002	-15.950	-5.245	-7.876
87.0		2.751	-0.150	-3.431	-4.300	-4.410
89.0		-1.000	-2.473	-10.115	-8.757	0.363
93.0		-1.410	-1.403	-0.005	-5.000	-0.184
96.0		-2.125	-2.021	1.000	-1.783	-7.187
100.0		-3.000	-3.055	-3.936	-3.366	-2.925
2.5	(LOWER)	-0.831	-1.050	-1.041	-1.187	-0.333
5.0		-0.000	-1.337	-1.711	-1.130	-0.206
10.0		-1.400	-1.296	-1.166	-1.237	-0.139
24.0		-0.976	-1.301	-1.001	-0.547	-0.500
33.0		-1.546	-1.222	-1.035	-0.536	-0.472
54.0		-1.101	-0.781	-0.643	-0.401	-1.006
73.5		-0.244	-0.310	0.166	-0.434	-0.720
84.0		-0.296	-1.405	-0.225	-0.208	-2.367
96.0		-0.820	-0.944	-0.267	0.102	0.180

RUN 379 POINT 4 ALPHA 0.01 PSI 0.00 HEIGHT 00.00

X/C, %		BP 2	BP 6	BP 12	BP 16	BP 22
0.0	(UPPER)	-1.440	-1.247	-1.174	0.553	-0.100
2.5		0.550	0.176	0.405	-0.504	-1.388
5.0		0.867	0.337	0.002	-0.811	-1.630
10.0		0.575	0.093	-0.306	-0.688	-0.845
15.0		0.271	0.226	-0.005	-0.606	-1.418
24.0		0.300	-0.230	-0.050	-0.423	-1.027
33.0		-0.005	-0.425	-1.056	-0.720	-0.000
54.0		-2.045	-1.136	-1.116	-2.013	-4.051
65.0		-0.350	-1.951	-1.060	-2.240	-2.378
78.5		-0.182	-5.007	-7.547	-7.630	-7.072
79.5		-100.537	-172.743	-150.324	-131.077	-110.056
80.5		-16.020	-17.373	-10.300	-00.140	0.050
81.5		-3.500	-10.202	-7.247	-11.006	-17.004
82.0		0.271	-4.017	5.475	-8.051	-7.043
84.0		-12.110	-6.100	-15.049	-5.257	-7.110
87.0		1.000	-0.370	-3.570	-4.433	-4.005
89.0		-2.322	-3.037	-10.000	-8.712	0.330
93.0		-1.090	-1.002	-1.053	-5.113	-0.455
96.0		-2.550	-2.072	0.000	-1.000	-7.029
100.0		-3.404	-3.074	-3.011	-2.024	-2.705
2.5	(LOWER)	-1.050	-1.230	-2.002	-1.317	-0.303
5.0		-1.056	-1.503	-1.042	-1.253	-0.250
10.0		-1.055	-1.400	-1.305	-1.335	-0.101
24.0		-1.231	-1.022	-1.150	-0.002	-0.456
33.0		-1.750	-1.404	-1.020	-0.020	-0.710
54.0		-1.203	-0.900	-0.504	-0.350	-1.956
73.5		-0.175	-0.260	0.230	-0.519	-0.522
84.0		0.230	-1.007	-0.050	-0.210	-2.504
96.0		-0.010	-0.407	-0.103	0.253	0.190

WING PRESSURE COEFFICIENTS

RUN 379 POINT 5 ALPHA -0.01 PSI 0.00 HEIGHT 00.00

X/C, %		BP 2	BP 6	BP 12	BP 16	BP 22
0.0	(UPPER)	-1.002	-1.278	-1.245	0.407	-0.107
2.5		0.512	0.190	0.400	-0.437	-1.330
5.0		0.000	0.319	0.145	-0.755	-1.572
10.0		0.547	0.111	-0.278	-0.000	-0.022
15.0		0.219	0.218	-0.014	-0.070	-1.302
24.0		0.326	-0.150	-0.004	-0.400	-1.013
33.0		-0.050	-0.431	-0.977	-0.754	-1.004
54.0		-2.000	-1.070	-1.005	-2.173	-4.702
65.0		-0.340	-2.002	-1.007	-2.200	-2.341
78.5		-0.106	-5.707	-7.102	-7.505	-7.447
79.5		-100.237	-172.336	-103.423	-154.251	-110.034
80.5		-16.502	-17.332	-10.030	-46.228	0.010
81.5		-3.006	-10.220	-7.103	-11.737	-16.055
82.0		7.105	-5.043	4.493	-8.711	-7.002
84.0		-11.400	-5.075	-14.002	-5.100	-7.190
87.0		1.363	-7.072	-3.570	-4.233	-4.120
89.0		-2.447	-3.067	-9.492	-8.393	-0.023
93.0		-2.240	-1.002	-1.337	-4.004	-0.410
96.0		-2.720	-2.735	0.202	-1.001	-6.726
100.0		-3.249	-3.003	-3.523	-2.010	-2.504
2.5	(LOWER)	-1.018	-1.250	-2.225	-1.200	-0.404
5.0		-1.000	-1.520	-1.940	-1.274	-0.261
10.0		-1.020	-1.447	-1.356	-1.326	-0.100
24.0		-1.256	-1.040	-1.114	-0.070	-0.440
33.0		-1.713	-1.490	-0.974	-0.014	-0.002
54.0		-1.130	-0.906	-0.541	-0.005	-2.100
73.5		-0.210	-0.200	0.275	-0.514	-0.404
84.0		-0.213	-1.777	-5.045	-0.130	-2.005
96.0		-0.740	-0.420	-0.140	0.224	0.227

RUN 380 POINT 1 ALPHA -0.01 PSI 0.00 HEIGHT 10.43

X/C, %		BP 2	BP 6	BP 12	BP 16	BP 22
0.0	(UPPER)	-1.372	-0.833	-0.382	-1.420	-1.743
2.5		0.410	-0.203	-0.290	-1.100	-2.000
5.0		0.400	-0.134	-0.405	-1.455	-2.304
10.0		0.473	-0.403	-0.007	-1.071	-0.976
15.0		-0.120	-0.150	-1.423	-1.015	-1.955
24.0		0.171	-0.502	-1.104	-0.907	-1.325
33.0		-0.242	-0.710	-1.300	-0.004	-1.300
54.0		-3.503	-1.402	-1.291	-5.004	-8.570
65.0		-0.131	-2.000	-2.200	-3.053	-3.414
78.5		0.125	-6.045	-8.700	-11.040	-11.007
79.5		-323.104	-302.010	-200.297	-253.471	-210.203
80.5		-24.052	-20.215	-20.747	-00.010	1.013
81.5		-2.047	-10.030	-8.003	-19.055	-26.427
82.0		10.270	-4.020	12.741	-10.005	-12.133
84.0		-16.973	-8.174	-25.020	-8.154	-11.207
87.0		5.147	-12.045	-3.002	-6.072	-5.510
89.0		-2.000	-5.051	-10.051	-14.203	2.471
93.0		-3.057	-1.004	-0.025	-7.703	-0.204
96.0		-4.541	-3.073	1.040	-2.510	-10.000
100.0		-2.500	-3.001	-3.290	-2.000	-3.200
2.5	(LOWER)	-0.752	-0.004	-1.111	-0.000	-0.550
5.0		-0.003	-1.294	-1.171	-0.244	-0.005
10.0		-1.590	-1.220	-0.325	-0.450	0.287
24.0		-0.402	-0.990	0.012	0.715	-0.000
33.0		-0.007	-0.402	0.100	0.030	-0.750
54.0		-0.190	0.300	0.450	0.104	-5.341
73.5		0.037	1.210	1.490	0.044	-1.292
84.0		2.220	-4.001	-8.250	-0.050	-3.001
96.0		1.777	1.410	1.030	0.003	-0.033

WING PRESSURE COEFFICIENTS

RUN 380 POINT 2 ALPHA 0.00 PSI 0.00 HEIGHT 32.73

X/C, %		BP 2	BP 6	BP 12	BP 16	BP 22
0.0	UPPER	-1.526	-1.251	-1.000	1.330	0.332
2.5		0.335	-0.237	0.000	-0.877	-1.083
5.0		0.447	-0.636	-0.183	-1.210	-1.744
10.0		0.455	-0.346	-0.500	-0.980	-0.000
15.0		-0.001	-0.050	-1.340	-0.927	-1.676
24.0		0.181	-0.635	-1.082	-0.302	-1.100
33.0		-0.110	-0.052	-1.274	-0.878	-1.173
54.0		-2.300	-1.309	-1.100	-0.919	-0.003
69.0		-0.235	-2.526	-2.111	-2.085	-2.732
78.5		-0.003	-0.201	-0.515	-10.474	-9.246
79.5		-316.240	-290.317	-279.546	-247.874	-290.004
80.5		-23.535	-24.577	-20.401	-08.577	1.711
81.5		-1.040	-16.133	-0.529	-17.000	-26.987
82.0		10.137	-3.534	13.061	-0.000	-10.712
84.0		-17.007	-7.225	-24.700	-7.196	-10.461
87.0		0.510	-12.050	-2.016	-5.007	-0.771
89.0		-1.000	-4.400	-15.021	-13.633	3.236
93.0		-2.115	-1.200	-0.706	-7.177	-0.414
96.0		-3.500	-3.450	1.974	-2.001	-0.005
100.0		-4.200	-5.704	-6.800	-5.741	-5.106
2.5	LOWER	-0.003	-1.105	-1.020	-1.526	-1.222
5.0		-0.000	-1.633	-2.004	-1.517	-0.738
10.0		-1.003	-1.521	-1.341	-1.000	-0.404
24.0		-1.123	-1.056	-1.305	-0.635	-0.705
33.0		-1.075	-1.524	-1.311	-0.000	-0.020
54.0		-1.614	-1.217	-0.922	-0.500	-0.117
73.5		-0.476	-0.505	0.215	0.220	-1.010
84.0		-0.314	-3.400	-7.956	-0.102	-3.456
96.0		-0.004	-0.500	-0.406	-0.140	-0.266

RUN 380 POINT 3 ALPHA -0.03 PSI 0.00 HEIGHT 05.70

X/C, %		BP 2	BP 6	BP 12	BP 16	BP 22
0.0	UPPER	-2.633	-2.220	-1.556	0.000	0.400
2.5		0.200	-0.311	0.173	-0.560	-0.054
5.0		0.452	-0.000	-0.212	-1.045	-1.573
10.0		0.441	-0.354	-0.057	-0.735	-0.517
15.0		-0.000	-0.000	-1.227	-0.716	-1.500
24.0		0.272	-0.207	-1.071	-0.256	-1.019
33.0		-0.120	-0.505	-1.200	-0.004	-1.100
54.0		-2.000	-1.377	-1.150	-4.440	-7.027
69.0		-0.452	-2.000	-2.123	-2.504	-2.705
78.5		-0.215	-7.000	-0.305	-0.300	-0.423
79.5		-234.006	-301.252	-277.430	-241.730	-290.204
80.5		-25.512	-26.700	-27.054	-00.553	1.475
81.5		-3.114	-17.505	-0.700	-18.003	-26.004
82.0		10.010	-4.000	12.532	-0.174	-10.025
84.0		-19.540	-8.100	-25.123	-0.401	-0.042
87.0		4.003	-12.700	-3.141	-0.532	-4.325
89.0		-3.200	-5.002	-16.263	-13.770	3.160
93.0		-2.205	-1.044	-1.110	-7.200	-0.010
96.0		-4.520	-2.050	1.005	-2.245	-10.003
100.0		-6.051	-6.000	-5.040	-5.224	-5.017
2.5	LOWER	-2.100	-2.205	-4.210	-1.005	-1.251
5.0		-2.074	-2.000	-3.542	-1.073	-0.752
10.0		-3.000	-2.027	-2.330	-1.730	-0.430
24.0		-2.434	-3.000	-1.578	-0.500	-0.704
33.0		-2.005	-2.416	-1.210	-0.000	-1.004
54.0		-1.163	-0.007	-0.500	-0.507	-4.023
73.5		-0.102	-0.157	0.330	0.452	-0.495
84.0		-0.303	-2.400	-0.003	0.004	-2.376
96.0		-1.442	-0.741	-0.371	-0.000	-0.177

WING PRESSURE COEFFICIENTS

RUN 380 POINT 4 ALPHA -0.01 PSI 0.00 HEIGHT 07.10

X/C, %		BP 2	BP 6	BP 12	BP 16	BP 22
0.0	UPPER	-2.074	-2.310	-1.377	0.032	0.470
2.5		0.242	-0.295	0.287	-0.012	-0.024
5.0		0.477	0.014	-0.236	-1.100	-1.004
10.0		0.530	-0.248	-0.546	-0.015	-0.504
15.0		0.072	0.047	-1.373	-0.777	-1.757
24.0		0.235	-0.440	-1.110	-0.310	-1.102
33.0		-0.100	-0.609	-1.265	-0.001	-1.314
54.0		-2.704	-1.450	-1.300	-3.037	-6.515
69.0		-0.450	-2.000	-2.201	-2.011	-2.051
78.5		-0.220	-7.230	-5.500	-9.000	-0.000
79.5		-225.021	-301.040	-277.771	-240.075	-297.101
80.5		-25.000	-26.500	-20.242	-08.304	1.322
81.5		-2.491	-15.250	-0.027	-17.041	-26.070
82.0		17.737	-4.775	12.727	-0.300	-10.075
84.0		-10.730	-0.235	-25.321	-7.000	-10.010
87.0		4.710	-12.810	-2.003	-5.054	-4.432
89.0		-3.014	-5.124	-16.502	-13.050	3.001
93.0		-3.435	-1.717	-1.188	-7.340	-0.000
96.0		-4.040	-3.020	1.004	-2.300	-10.147
100.0		-6.044	-6.070	-5.040	-5.270	-5.074
2.5	LOWER	-2.232	-2.300	-4.267	-1.000	-1.310
5.0		-2.302	-2.083	-3.002	-1.741	-0.700
10.0		-3.150	-2.053	-2.305	-1.015	-0.455
24.0		-2.515	-3.205	-1.001	-0.512	-0.710
33.0		-2.030	-2.430	-1.201	-0.707	-1.010
54.0		-1.210	-1.012	-0.050	-0.010	-4.212
73.5		-0.242	-0.242	0.270	0.700	-0.034
84.0		-0.204	-1.430	-0.031	1.072	-1.330
96.0		-1.517	-0.702	-0.375	-0.014	-0.292

APPENDIX C

TABULATED FLOW FIELD DATA

PROPULSIVE WING FLOW FIELD

RAKE SUMMARY, RUN 100

PT	ALPHA BETA HEIGHT	VT1 ALP1 BET1	VT2 ALP2 BET2	VT3 ALP3 BET3	VT4 ALP4 BET4	VT5 ALP5 BET5	VT6 ALP6 BET6	VT7 ALP7 BET7
5	1.50	4.00	3.04	3.47	5.00	3.96	4.02	4.17
	0.00	-5.73	-8.06	-5.35	-2.30	-5.10	-2.45	-3.70
	88.00	-0.75	-0.82	2.06	0.10	0.52	-1.24	-12.63
6	3.56	3.00	3.05	3.56	5.04	3.90	4.00	4.35
	0.00	-6.22	-8.53	-6.54	-4.27	-6.73	-3.03	-5.10
	87.21	-1.07	-1.73	1.00	-0.61	0.77	-1.01	-12.00
7	5.56	4.00	3.00	3.20	5.03	3.90	4.00	4.20
	0.00	-7.14	-10.07	-7.03	-5.00	-6.25	-5.10	-6.03
	88.35	-2.35	-1.76	0.50	-1.71	0.34	-2.90	-13.20
8	7.51	4.15	3.00	3.00	5.03	3.90	4.00	4.00
	0.00	-8.00	-12.23	-8.00	-6.07	-8.10	-6.54	-8.15
	84.57	-1.75	-2.37	-0.53	-1.01	7.00	-3.10	-12.02
9	9.40	4.00	3.90	3.72	5.00	3.90	4.70	4.00
	0.00	-10.00	-13.71	-8.02	-8.23	-10.10	-7.03	-9.31
	84.95	-1.30	-2.06	-2.40	-2.01	7.40	-3.03	-11.00
10	11.50	4.00	4.04	2.00	5.00	3.90	4.70	4.00
	0.00	-12.25	-14.77	-7.26	-9.56	-10.70	-9.12	-10.95
	80.83	-1.02	-3.37	-4.00	-3.30	0.74	-4.30	-13.03
11	13.47	4.14	4.07	3.00	4.90	3.95	4.75	4.71
	0.00	-13.01	-15.03	-9.17	-10.75	-11.56	-10.00	-11.06
	84.30	-1.70	-4.25	-5.52	-3.01	0.03	-4.70	-13.29
12	15.44	4.15	3.02	3.05	5.02	3.90	4.75	4.00
	0.00	-15.00	-17.04	-5.54	-11.90	-12.17	-11.24	-12.02
	85.45	-2.30	-6.46	-6.00	-4.03	5.44	-4.07	-12.50
13	17.47	3.97	3.53	3.40	5.00	3.94	4.73	4.00
	0.00	-16.35	-18.16	-8.37	-13.27	-13.30	-12.32	-14.04
	86.03	-4.20	-8.12	-8.14	-5.56	4.31	-5.40	-13.76
14	19.30	3.02	3.50	3.96	4.07	3.94	4.73	4.00
	0.00	-18.34	-22.07	-7.14	-14.50	-14.50	-13.00	-16.47
	93.12	-5.06	-12.50	-8.04	-6.10	3.74	-5.00	-13.03
15	-0.40	4.00	4.10	3.02	5.03	4.00	4.01	4.05
	0.00	-0.26	-0.14	1.41	-0.14	-3.00	-0.02	-2.00
	88.00	3.03	-1.70	1.02	-2.01	0.20	-2.52	-7.70
16	-2.47	4.10	4.14	2.06	5.03	4.02	4.02	4.00
	0.00	-3.01	-4.40	3.41	1.40	-2.30	0.40	-1.40
	88.00	4.00	-0.04	2.51	-2.56	0.00	-2.15	-7.10
17	-4.50	4.00	4.10	3.00	5.04	4.04	4.00	5.02
	0.00	-2.24	-2.06	5.40	3.02	-0.74	1.50	0.13
	82.46	4.40	0.01	4.30	-2.10	10.54	-1.00	-0.04

PROPULSIVE WING FLOW FIELD

RAKE SUMMARY, RUN 101

PT	ALPHA BETA HEIGHT	VT1 ALP1 BET1	VT2 ALP2 BET2	VT3 ALP3 BET3	VT4 ALP4 BET4	VT5 ALP5 BET5	VT6 ALP6 BET6	VT7 ALP7 BET7
1	-4.51	5.24	5.00	5.10	5.42	5.43	5.01	5.30
	0.00	-1.30	-0.24	4.06	2.50	0.51	1.02	0.05
	82.46	4.23	1.27	3.70	-1.30	7.20	-0.10	-3.30
2	-2.40	5.37	5.01	5.10	5.21	5.43	5.00	5.37
	0.00	-2.55	-2.40	2.00	1.19	-1.02	0.30	-0.91
	80.83	5.02	-0.03	1.07	-1.06	6.30	-0.00	-3.70
3	-0.43	5.20	5.70	5.10	5.22	5.44	5.07	5.30
	0.00	-5.73	-4.24	0.50	-0.72	-2.04	-1.13	-2.50
	87.38	4.44	-1.50	0.04	-2.04	5.05	-1.14	-4.25
4	1.53	5.31	5.77	5.20	5.20	5.40	5.00	5.43
	0.00	-7.21	-5.27	-0.56	-2.33	-3.05	-2.22	-3.00
	84.41	3.52	-2.30	-0.06	-3.27	5.07	-1.00	-4.74
5	3.50	5.25	5.01	5.10	5.22	5.45	5.00	5.47
	0.00	-7.35	-6.53	-1.07	-3.00	-5.36	-3.00	-5.33
	83.73	1.01	-2.72	-1.41	-4.33	4.27	-2.54	-5.24
6	5.50	5.30	5.02	5.03	5.23	5.43	5.07	5.50
	0.00	-8.44	-7.77	-3.01	-5.07	-6.00	-5.10	-6.73
	85.02	1.05	-2.00	-2.22	-4.50	3.02	-3.05	-5.40
7	7.51	5.40	5.01	4.70	5.25	5.43	5.07	5.52
	0.00	-10.07	-8.40	-4.00	-6.30	-7.00	-6.35	-7.00
	85.00	1.10	-3.10	-3.20	-5.00	3.37	-3.44	-5.74
8	9.54	5.24	5.04	4.67	5.35	5.23	5.22	5.60
	0.00	-10.10	-8.34	-8.37	-6.37	-8.00	-6.47	-8.00
	86.38	-0.70	-2.40	-3.04	-4.23	-1.17	-1.46	-1.22
9	11.46	5.22	5.05	4.41	5.33	5.23	5.24	5.73
	0.00	-11.40	-10.72	-8.20	-8.13	-7.00	-7.40	-7.00
	87.46	-0.51	-2.77	-5.17	-4.74	-1.70	-1.00	-1.50
10	13.45	5.22	5.03	4.42	5.35	5.26	5.29	5.73
	0.00	-12.00	-11.00	-8.31	-8.73	-8.03	-7.00	-8.03
	83.74	-0.70	-3.04	-6.23	-5.26	-2.46	-2.50	-2.13
11	15.47	5.22	5.47	4.73	5.34	5.25	5.20	5.73
	0.00	-14.00	-13.30	-10.45	-10.57	-9.30	-8.01	-10.00
	85.02	-2.14	-5.53	-5.00	-8.00	-2.01	-2.04	-2.46
12	17.40	5.12	4.00	5.10	5.31	5.22	5.23	5.73
	0.00	-15.00	-13.74	-8.51	-11.24	-10.10	-8.30	-11.10
	85.74	-3.75	-7.05	-7.76	-7.20	-3.77	-3.53	-2.03
13	19.40	4.03	4.01	5.33	5.33	5.20	5.27	5.01
	0.00	-16.00	-16.54	-10.00	-12.15	-11.00	-10.22	-12.11
	83.06	-6.05	-11.02	-9.12	-9.06	-4.00	-4.55	-3.24

PROPULSIVE WING FLOW FIELD

RAKE SUMMARY, RUN 102

PT	ALPHA BETA HEIGHT	VT1 ALP1 BET1	VT2 ALP2 BET2	VT3 ALP3 BET3	VT4 ALP4 BET4	VT5 ALP5 BET5	VT6 ALP6 BET6	VT7 ALP7 BET7
1	-4.00	7.24	7.70	7.86	7.56	7.96	7.56	8.14
	0.00	-0.02	1.51	2.02	1.02	1.90	1.77	1.00
	82.60	3.02	2.10	3.40	0.66	3.13	2.05	2.30
2	-2.45	7.37	7.77	7.87	7.56	7.53	7.57	8.15
	0.00	-2.75	-0.79	0.04	-0.22	0.17	0.35	0.24
	80.02	4.90	0.76	1.76	-0.04	2.30	2.13	1.06
3	-0.41	7.42	7.80	7.90	7.50	7.53	7.56	8.16
	0.00	-5.04	-2.40	-1.03	-1.06	-1.22	-0.06	-1.03
	80.30	4.02	-0.81	0.21	-0.03	1.00	1.46	1.23
4	1.57	7.20	7.95	7.70	7.57	7.53	7.56	8.16
	0.00	-8.53	-3.01	-2.40	-3.33	-2.50	-1.00	-2.31
	80.60	2.04	-1.06	-0.70	-1.70	1.00	0.70	0.40
5	3.55	7.10	7.94	7.06	7.50	7.53	7.52	8.13
	0.00	-6.04	-4.00	-4.12	-4.47	-2.06	-2.06	-2.72
	84.50	0.00	-2.00	-1.22	-2.06	0.33	0.16	-0.15
6	5.54	7.30	7.06	7.40	7.50	7.40	7.47	8.10
	0.00	-7.10	-5.00	-6.00	-5.04	-5.02	-4.35	-4.07
	85.06	-0.11	-2.23	-1.00	-3.10	-0.22	-0.47	-0.24
7	7.50	7.42	7.90	7.12	7.50	7.51	7.50	8.17
	0.00	-8.72	-7.55	-7.76	-7.15	-6.25	-5.06	-6.07
	85.50	-0.20	-2.25	-2.52	-3.50	-0.83	-0.70	-0.64
8	9.52	7.55	7.72	8.72	7.53	7.50	7.50	7.63
	0.00	-8.74	-9.57	-10.01	-8.78	-7.10	-6.36	-5.06
	83.01	-2.01	-1.02	-2.83	-1.03	-1.36	-0.77	-0.60
9	11.46	7.53	7.70	8.30	7.47	7.49	7.53	7.50
	0.00	-11.21	-10.06	-11.06	-9.73	-8.17	-7.21	-6.07
	80.50	-1.04	-2.16	-4.11	-2.45	-1.07	-1.33	-1.30
10	13.46	7.52	7.71	8.10	7.43	7.46	7.46	7.52
	0.00	-12.45	-12.10	-11.50	-10.43	-8.06	-7.06	-7.51
	84.23	-2.20	-2.06	-5.50	-3.00	-2.50	-1.05	-1.07
11	15.44	7.50	7.54	8.00	7.52	7.53	7.50	7.61
	0.00	-13.57	-13.03	-12.27	-11.14	-9.60	-8.03	-8.46
	84.76	-3.03	-4.04	-4.01	-3.06	-3.20	-2.41	-2.31
12	17.41	7.35	8.00	7.26	7.50	7.50	7.51	7.55
	0.00	-14.43	-13.00	-10.00	-11.02	-10.50	-9.32	-9.34
	80.00	-5.06	-7.53	-6.05	-4.06	-3.02	-2.00	-2.73
13	19.41	8.01	8.30	7.10	7.46	7.45	7.45	7.52
	0.00	-16.05	-16.42	-13.02	-12.02	-11.44	-10.06	-10.20
	02.76	-7.74	-11.50	-8.15	-5.50	-4.47	-3.61	-3.35

PROPULSIVE WING FLOW FIELD

RAKE SUMMARY, RUN 103

PT	ALPHA BETA HEIGHT	VT1 ALP1 BET1	VT2 ALP2 BET2	VT3 ALP3 BET3	VT4 ALP4 BET4	VT5 ALP5 BET5	VT6 ALP6 BET6	VT7 ALP7 BET7
1	-4.57	9.05	12.02	16.03	31.50	13.20	7.30	7.54
	0.00	-5.02	-3.61	-2.25	-3.42	-10.02	1.78	1.61
	82.20	2.07	1.02	4.00	2.06	4.32	3.21	2.00
2	-2.50	8.02	11.20	15.36	30.50	12.07	7.30	7.52
	0.00	-10.13	-6.00	-4.70	-5.51	-11.07	0.02	0.06
	80.50	3.[illegible]	0.04	3.14	2.07	3.50	2.12	1.01
3	-0.30	8.00	11.20	15.51	30.46	12.07	7.30	7.50
	0.00	-[illegible]	-8.07	-7.02	-7.00	-12.77	-1.25	-1.10
	80.02	[illegible]	-1.00	1.05	2.10	3.01	1.22	0.07
4	1.54	8.44	11.[illegible]	15.00	30.44	12.02	7.34	7.41
	0.00	-10.70	-10.40	-8.70	-9.40	-15.00	-3.01	-2.00
	81.70	-1.40	-2.05	0.73	1.03	2.24	0.20	0.25
5	3.55	9.15	11.50	15.01	30.30	12.52	7.27	7.31
	0.00	-10.30	-12.45	-10.05	-11.47	-17.51	-4.46	-3.00
	83.05	-5.45	-2.07	-0.30	1.52	1.73	-0.40	-0.50
6	5.57	9.22	11.72	15.05	30.11	12.15	7.20	7.20
	0.00	-10.22	-13.72	-12.03	-13.43	-10.06	-5.00	-6.43
	84.47	-7.06	-3.17	-1.15	1.26	1.16	-1.06	-1.15
7	7.56	9.37	12.10	16.30	30.12	11.01	7.22	7.20
	0.00	-17.55	-15.10	-14.20	-15.31	-20.25	-7.50	-6.72
	85.50	-7.27	-3.00	-1.60	1.03	0.76	-1.77	-1.74
8	9.53	9.40	12.40	16.03	30.14	11.00	7.10	6.02
	0.00	-18.27	-16.05	-16.10	-17.20	-20.74	-9.17	-7.54
	84.04	-7.21	-3.66	-2.13	1.23	0.16	-2.07	-2.35
9	11.50	9.71	12.50	16.06	29.54	10.02	7.15	6.07
	0.00	-18.04	-18.25	-17.52	-19.14	-21.58	-10.40	-8.76
	85.00	-6.60	-4.00	-2.52	1.17	-0.00	2.57	-3.01
10	13.45	9.70	12.75	16.04	29.27	10.40	7.10	6.77
	0.00	-20.06	-19.01	-18.06	-20.02	-23.20	-11.70	-9.70
	84.02	-7.23	-4.40	-2.02	0.00	-0.06	-3.16	-3.00
11	15.42	9.06	12.07	17.03	28.05	9.00	7.01	6.00
	0.06	-22.10	-21.46	-20.42	-22.77	-24.06	-12.02	-10.70
	83.40	-7.76	-5.11	-2.00	0.05	-1.16	-3.73	-4.17
12	17.38	9.25	12.35	17.01	28.00	8.50	6.02	6.54
	0.00	-24.31	-23.10	-21.00	-24.56	-25.00	-13.04	-11.50
	80.41	-8.06	-6.06	-3.33	0.77	-1.03	-4.14	-4.02
13	19.43	10.05	12.23	17.33	28.01	8.27	6.01	6.51
	0.00	-25.00	-24.05	-23.02	-26.52	-26.07	-15.30	-12.01
	02.30	-10.33	-6.42	-3.40	0.54	-3.26	-4.43	-5.04

PROPULSIVE WING FLOW FIELD

RAKE SUMMARY, RUN 104

PT	ALPHA BETA HEIGHT	VT1 ALP1 BET1	VT2 ALP2 BET2	VT3 ALP3 BET3	VT4 ALP4 BET4	VT5 ALP5 BET5	VT6 ALP6 BET6	VT7 ALP7 BET7
1	-4.52	7.07	8.47	13.88	20.20	13.06	5.33	5.10
	0.00	-8.25	-5.04	-2.94	-3.81	-11.79	4.10	4.10
	82.00	2.33	2.43	4.36	2.73	5.27	3.88	4.34
2	-2.42	8.79	8.11	13.44	20.07	13.00	5.20	5.10
	0.00	-11.46	-8.88	-4.00	-5.58	-14.17	2.71	2.00
	84.02	3.00	2.13	3.24	2.88	4.77	3.16	2.46
3	-0.44	8.06	8.10	13.47	20.21	13.57	5.34	5.04
	0.00	-15.78	-12.24	-8.00	-7.94	-16.33	0.00	1.53
	86.57	3.16	-0.26	2.38	2.33	3.74	2.06	2.48
4	1.50	7.42	8.10	13.86	20.25	13.20	5.37	5.01
	0.00	-17.61	-12.07	-8.82	-8.58	-17.71	-0.71	0.00
	88.22	0.48	-1.57	1.52	2.00	3.11	0.00	1.38
5	3.50	7.63	8.00	13.71	20.14	13.20	5.32	4.98
	0.00	-19.31	-14.00	-10.06	-11.57	-19.31	-2.00	-1.35
	85.61	-2.30	-3.06	0.33	1.77	2.07	0.68	0.71
6	5.52	7.41	8.37	13.00	20.22	13.30	5.30	4.94
	0.00	-19.02	-15.02	-12.00	-13.52	-21.03	-3.48	-2.50
	84.41	-6.06	-3.25	-0.07	1.31	2.34	-0.55	-0.30
7	7.56	7.27	8.26	13.06	20.20	13.11	5.25	4.84
	0.00	-20.06	-17.30	-14.02	-15.47	-23.04	-5.26	-3.80
	84.41	-10.37	-3.03	-0.71	1.10	2.75	-1.38	-1.20
8	9.58	7.26	8.22	13.04	20.00	12.50	5.14	4.76
	0.00	-21.11	-19.19	-16.57	-17.47	-25.00	-6.61	-4.73
	86.87	-12.20	-4.50	-0.07	1.11	1.86	-1.75	-1.26
9	11.46	7.22	8.78	14.20	20.51	12.02	5.07	4.67
	0.00	-21.20	-19.83	-18.24	-19.22	-26.72	-7.73	-5.72
	85.06	-11.24	-3.81	-1.22	1.20	1.07	-2.24	-2.25
10	13.53	7.25	8.37	14.10	20.37	11.70	5.05	4.63
	0.00	-23.76	-22.44	-19.06	-21.20	-28.08	-8.24	-6.00
	86.36	-11.80	-4.24	-1.88	1.01	1.50	-2.53	-2.64
11	15.46	7.35	8.61	14.54	20.37	11.30	5.03	4.52
	0.00	-25.20	-24.00	-21.00	-23.00	-30.61	-10.42	-7.00
	85.84	-11.07	-5.24	-2.30	1.06	1.44	-3.24	-3.04
12	17.40	7.30	8.00	14.50	20.10	10.96	4.82	4.42
	0.00	-26.40	-25.00	-22.78	-24.78	-31.40	-11.00	-8.50
	85.50	-12.27	-4.77	-2.61	0.00	0.55	-3.84	-3.04
13	19.37	7.36	8.61	14.72	27.07	10.00	4.84	4.35
	0.00	-27.05	-27.10	-24.38	-26.05	-33.35	-12.03	-9.00
	82.81	-13.24	-5.05	-2.00	0.77	-0.13	-4.02	-4.50

PROPULSIVE WING FLOW FIELD

RAKE SUMMARY, RUN 105

PT	ALPHA BETA HEIGHT	VT1 ALP1 BET1	VT2 ALP2 BET2	VT3 ALP3 BET3	VT4 ALP4 BET4	VT5 ALP5 BET5	VT6 ALP6 BET6	VT7 ALP7 BET7
19	-2.02	150.70	155.00	156.00	155.00	155.00	156.20	157.00
	0.00	-2.18	-1.22	-1.17	-1.00	-0.30	-0.23	-0.00
	87.16	2.03	2.06	3.33	2.54	2.07	3.16	2.01
20	0.00	152.30	156.30	156.20	155.40	154.50	155.00	156.00
	0.00	-4.46	-3.14	-2.93	-2.70	-1.00	-1.01	-1.50
	84.00	2.06	1.00	1.07	1.77	2.20	2.41	2.10
21	2.00	152.00	157.70	157.10	156.00	154.00	155.00	156.40
	0.00	-6.42	-4.52	-4.57	-4.39	-3.28	-2.81	-2.00
	88.00	1.00	-0.24	0.00	0.04	1.32	1.01	1.50
22	4.02	148.70	156.00	157.20	156.10	154.00	155.40	156.30
	0.00	-7.12	-5.88	-6.20	-5.70	-4.57	-3.96	-3.00
	85.06	-0.13	-0.04	-0.04	0.04	0.74	0.93	0.00
23	5.98	150.20	157.30	155.70	155.30	154.20	154.40	158.20
	0.00	7.40	-6.02	-8.14	-7.18	-5.77	-5.18	-5.20
	85.37	-1.56	-1.35	-0.50	-0.30	0.20	0.32	0.14
24	8.02	152.70	157.50	152.00	155.40	154.10	154.30	158.20
	0.00	-8.30	-6.25	-10.10	-8.00	-7.28	-6.33	-8.41
	85.48	-2.11	-1.40	-1.16	-0.81	-0.41	-0.21	-0.06
25	10.00	154.00	158.00	145.00	156.20	154.00	155.10	160.20
	0.00	-10.23	-9.03	-12.03	-8.85	-8.52	-7.54	-7.40
	85.47	-1.78	-1.33	-1.73	-1.54	-1.06	-0.80	-0.82
26	11.98	155.00	158.00	130.10	156.20	154.90	155.20	160.30
	0.00	-11.73	-11.32	-13.38	-10.78	-9.43	-8.59	-8.43
	85.34	-1.75	-1.52	-3.05	-2.12	-1.00	-1.18	-1.07
27	14.01	155.50	158.20	136.90	158.00	154.00	155.00	160.00
	0.00	-13.20	-12.87	-14.73	-11.88	-10.35	-9.38	-8.37
	58.17	-1.02	-1.04	-4.35	-2.00	-2.28	-1.72	-1.50
28	15.99	156.30	157.00	132.00	156.50	155.10	155.20	158.00
	0.00	-14.36	-13.22	-14.82	-12.61	-11.13	-10.00	-10.22
	85.90	-3.00	-3.58	-4.78	-3.12	-2.92	-2.17	-1.95
29	17.98	154.50	141.40	143.70	158.70	155.00	155.10	158.00
	0.00	-15.23	-13.61	-12.31	-13.21	-11.95	-10.84	-11.14
	86.28	-5.01	-5.78	-6.27	-4.05	-3.81	-2.87	-2.30
30	20.01	148.10	134.70	148.20	158.00	154.50	154.50	158.00
	0.00	-16.70	-16.10	-14.28	-14.33	-12.83	-11.00	-11.00
	88.23	-7.21	-8.34	-6.08	-4.05	-4.14	-3.20	-2.78
31	21.97	137.50	133.30	147.20	155.00	153.50	153.00	157.50
	0.00	-18.00	-18.00	-15.73	-15.37	-13.75	-12.40	-12.68
	85.75	-10.57	-13.04	-8.00	-5.40	-4.05	-4.01	-3.40

PROPULSIVE WING FLOW FIELD

RAKE SUMMARY, RUN 106

PT	ALPHA BETA HEIGHT	VT1 ALP1 BET1	VT2 ALP2 BET2	VT3 ALP3 BET3	VT4 ALP4 BET4	VT5 ALP5 BET5	VT6 ALP6 BET6	VT7 ALP7 BET7
1	-1.00	144.10	182.50	231.00	308.00	146.10	126.00	134.10
	0.00	-8.20	-5.27	-4.53	-6.18	-6.44	-2.00	-1.63
	81.06	2.01	1.68	3.10	2.93	2.00	2.14	2.21
2	0.00	140.70	180.00	220.90	302.40	146.00	126.40	134.00
	0.00	-11.20	-7.98	-7.07	-8.05	-8.31	-3.57	-3.06
	86.86	1.31	0.30	2.10	2.90	2.35	1.20	1.41
3	1.00	146.10	182.50	231.50	300.40	146.30	126.00	133.30
	0.00	-15.06	-9.87	-9.66	-10.00	-10.20	-4.81	-4.37
	87.14	-1.00	-1.20	0.66	2.02	1.43	0.41	0.57
4	4.03	148.90	187.00	233.00	306.20	142.90	125.30	132.60
	0.00	-16.37	-11.21	-11.03	-11.90	-11.33	-6.43	-5.02
	85.21	-3.06	-2.01	-0.40	1.50	0.46	-0.51	-0.15
5	5.00	149.00	192.00	235.00	302.40	143.30	125.00	132.00
	0.00	-14.88	-12.91	-12.72	-13.86	-13.51	-7.81	-7.17
	85.73	-3.75	-2.34	-0.03	1.32	-0.16	-1.19	-0.71
6	7.00	159.00	190.00	238.40	370.00	130.90	124.70	131.50
	0.00	-15.41	-14.37	-14.23	-15.03	-14.81	-9.19	-8.52
	86.04	-3.71	-2.04	-1.38	1.23	-1.24	-1.86	-1.23
7	10.00	190.00	202.00	230.60	373.70	130.70	124.40	130.20
	0.00	-18.76	-18.11	-15.57	-17.53	-15.57	-10.54	-9.83
	85.44	-4.27	-3.37	-1.77	1.06	-1.00	-2.50	-1.00
8	11.00	188.30	206.30	240.40	305.50	135.00	123.90	129.50
	0.00	-18.00	-17.40	-16.81	-19.34	-16.60	-11.75	-10.00
	85.00	-4.45	-4.00	-1.72	1.00	-2.57	-3.03	-2.36
9	14.00	166.90	207.00	242.70	268.00	131.40	123.50	128.00
	0.00	-19.78	-19.27	-17.60	-21.00	-17.43	-13.00	-12.16
	87.58	-5.19	-4.27	-2.05	0.75	-3.70	3.61	-2.00
10	18.00	173.40	205.50	242.00	320.00	127.00	122.70	127.00
	0.00	-21.27	-20.70	-18.82	-22.04	-18.03	-13.86	-13.21
	87.37	-5.04	-4.00	-2.20	0.53	-4.43	-4.14	-3.30
11	18.03	175.30	202.20	247.10	330.40	126.20	122.20	127.40
	0.00	-22.81	-22.55	-19.81	-24.50	-18.82	-15.07	-14.30
	87.52	-6.16	-5.37	-2.62	0.23	-5.18	-4.80	-3.71
12	19.00	175.00	196.00	249.20	325.40	124.00	121.60	126.30
	0.00	-24.06	-24.28	-21.15	-26.10	-19.05	-16.04	-15.28
	88.86	-6.52	-5.88	-3.04	-0.31	-5.95	-5.01	-4.06
13	21.00	174.70	195.10	250.00	319.40	123.00	121.00	125.00
	0.00	-26.48	-25.82	-22.78	-27.76	-20.68	-17.17	-16.44
	95.86	-6.00	-6.20	-3.16	-0.52	-6.30	-5.36	-4.31

PROPULSIVE WING FLOW FIELD

RAKE SUMMARY, RUN 107

PT	ALPHA BETA HEIGHT	VT1 ALP1 BET1	VT2 ALP2 BET2	VT3 ALP3 BET3	VT4 ALP4 BET4	VT5 ALP5 BET5	VT6 ALP6 BET6	VT7 ALP7 BET7
2	-0.01	105.00	172.00	187.40	306.00	156.00	86.00	84.42
	0.00	-13.40	-10.02	-7.53	-8.04	-14.30	-2.46	-1.00
	90.23	1.01	0.16	2.61	2.48	3.46	2.26	1.92
4	4.02	113.40	137.10	190.10	303.46	150.90	86.02	83.50
	0.00	-16.00	-13.05	-11.05	-12.01	-17.00	-5.30	-4.32
	87.43	-4.72	-2.51	0.25	1.60	1.07	0.07	0.04
6	5.00	111.90	140.00	181.00	302.00	142.00	86.07	82.55
	0.00	-18.54	-16.31	-15.44	-15.81	-20.75	-6.38	-6.04
	85.04	-8.03	-3.11	-1.23	1.21	1.11	-0.02	-1.30
8	11.00	114.90	148.30	201.30	302.10	132.90	86.10	81.42
	0.00	-20.13	-18.20	-18.30	-19.07	-23.48	-11.16	-9.14
	86.14	-7.19	-3.81	-1.07	1.11	0.36	-2.00	-2.01
13	21.06	122.70	150.20	212.10	342.30	111.50	82.31	78.71
	0.00	-28.40	-27.50	-25.47	-28.90	-28.82	-17.28	-14.24
	87.13	-10.64	-6.42	-7.15	0.50	-2.00	-4.34	-5.28

PROPULSIVE WING FLOW FIELD

RAKE SUMMARY. RUN 108

PT	ALPHA BETA HEIGHT	VT1 ALP1 BET1	VT2 ALP2 BET2	VT3 ALP3 BET3	VT4 ALP4 BET4	VT5 ALP5 BET5	VT6 ALP6 BET6	VT7 ALP7 BET7
2	0.03 0.00 86.66	83.20 -14.33 1.83	100.30 -13.06 2.30	101.90 -7.87 2.97	346.90 -8.05 2.61	170.00 -16.87 4.41	64.02 0.11 3.64	54.54 1.04 2.73
4	3.00 0.00 86.83	82.30 -10.75 -2.06	112.10 -10.20 -2.14	103.90 -11.02 1.20	346.20 -11.95 1.86	167.00 -20.17 3.16	64.50 -2.83 1.77	54.02 -0.46 0.24
6	7.00 0.00 86.30	81.46 -21.75 -0.02	108.30 -18.34 -3.87	107.40 -19.50 -0.15	347.30 -19.81 1.26	102.00 -24.26 2.73	63.55 -5.23 0.24	53.00 -2.80 -1.33
8	11.00 0.00 85.31	-0.02 -22.23 -12.61	-0.04 -20.70 -3.76	-0.00 -18.00 -1.01	-0.30 -18.83 1.27	-0.00 -30.21 2.52	-0.01 -8.00 -0.96	-0.01 -5.20 -2.78

PROPULSIVE WING FLOW FIELD

RAKE SUMMARY. RUN 110

PT	ALPHA BETA HEIGHT	VT1 ALP1 BET1	VT2 ALP2 BET2	VT3 ALP3 BET3	VT4 ALP4 BET4	VT5 ALP5 BET5	VT6 ALP6 BET6	VT7 ALP7 BET7
16	-0.05 0.00 93.88	153.20 -3.03 3.96	157.00 -2.53 3.12	156.50 -2.80 4.00	155.00 -2.87 1.40	155.10 -1.03 2.06	******** 49.11 86.02	******** -75.71 57.00
18	4.00 0.00 86.81	153.00 -5.71 4.00	150.10 -5.50 4.00	154.00 -6.55 4.07	155.00 -5.50 -0.50	155.20 -4.36 0.80	******** 40.07 70.04	******** -78.05 95.57
20	8.02 0.00 83.00	154.50 -8.21 5.30	150.00 -8.42 4.50	122.00 -8.75 2.56	156.30 -8.00 -2.26	155.10 -8.98 -1.19	******** 31.00 73.57	******** -83.31 53.20
22	12.03 0.00 84.10	155.10 -11.50 5.13	161.10 -11.83 4.27	123.50 -10.14 -5.10	156.40 -9.93 -4.10	155.40 -8.72 -2.81	******** 18.22 76.29	******** -86.06 49.80
27	22.02 0.00 90.12	102.20 -22.90 -29.43	121.50 -20.00 -23.96	155.20 -14.05 -14.43	102.20 -12.00 -11.27	160.80 -10.44 -6.51	******** -30.94 77.04	******** -90.35 42.74

PROPULSIVE WING FLOW FIELD

RAKE SUMMARY, RUN 111

PT	ALPHA BETA HEIGHT	VT1 ALP1 BET1	VT2 ALP2 BET2	VT3 ALP3 BET3	VT4 ALP4 BET4	VT5 ALP5 BET5	VT6 ALP6 BET6	VT7 ALP7 BET7
2	0.06	127.00	133.40	175.70	302.50	142.50	**********	**********
	0.00	-7.53	-6.50	-2.04	-7.08	-7.07	50.10	-73.70
	04.05	5.11	2.00	4.74	3.53	2.74	05.10	07.40
4	4.06	127.00	134.50	182.70	353.00	126.50	**********	**********
	0.00	-10.30	-8.75	-5.47	-11.00	-8.04	51.02	-77.20
	06.41	5.07	3.47	5.16	3.27	0.57	00.50	00.00
6	8.01	130.40	135.00	210.30	342.30	130.30	**********	**********
	0.00	-13.23	-12.53	-8.50	-15.05	-11.10	44.00	-00.04
	06.00	8.31	3.00	5.00	2.00	-1.01	71.03	04.32
8	12.06	130.00	137.30	220.30	320.20	127.10	**********	**********
	0.00	-16.35	-16.21	-11.04	-16.10	-13.40	36.00	-04.00
	06.21	5.20	2.40	4.27	1.77	-3.00	74.36	02.53
13	22.06	133.00	136.90	261.10	266.70	122.40	**********	**********
	0.00	-22.29	-23.40	-20.03	-27.56	-18.71	0.35	-05.53
	08.51	-5.06	-10.21	-2.13	-0.04	-0.03	70.05	57.00

PROPULSIVE WING FLOW FIELD

RAKE SUMMARY, RUN 112

PT	ALPHA BETA HEIGHT	VT1 ALP1 BET1	VT2 ALP2 BET2	VT3 ALP3 BET3	VT4 ALP4 BET4	VT5 ALP5 BET5	VT6 ALP6 BET6	VT7 ALP7 BET7
2	-0.00	00.14	05.40	130.00	330.00	152.00	**********	**********
	0.00	-12.40	-7.04	-1.00	-7.44	-13.42	07.42	-73.00
	01.00	7.30	1.05	4.76	3.33	3.00	04.34	74.10
4	4.01	00.30	05.00	150.10	330.20	136.20	**********	**********
	0.00	15.31	-11.26	-5.41	-11.41	-15.40	02.12	-77.05
	03.07	0.51	2.01	5.01	3.33	2.50	07.24	73.44
6	8.02	01.23	00.25	161.00	310.00	127.00	******	********
	0.00	-17.70	-14.53	-0.07	-15.37	-18.43	50.42	-01.43
	04.00	0.50	2.07	4.00	3.11	0.03	00.00	72.70
8	12.02	01.10	100.10	177.00	322.20	110.40	**********	**********
	0.00	-20.13	-17.01	-12.13	-18.31	-20.14	50.30	-05.30
	03.13	1.0	1.30	3.07	3.02	-1.12	72.40	71.00
13	22.07	05.00	103.70	210.50	307.00	07.11	**********	**********
	0.00	-24.20	-23.03	-21.55	-20.57	-24.53	31.04	-05.01
	08.37	-1.51	-0.10	-1.26	1.04	-5.07	70.22	00.70

PROPULSIVE WING FLOW FIELD

RAKE SUMMARY, RUN 113

PT	ALPHA BETA HEIGHT	VT1 ALP1 BET1	VT2 ALP2 BET2	VT3 ALP3 BET3	VT4 ALP4 BET4	VT5 ALP5 BET5	VT6 ALP6 BET6	VT7 ALP7 BET7
2	0.07	86.71	73.22	110.00	314.00	167.40	**********	**********
	0.00	-17.34	-6.04	-1.18	-7.53	-10.10	79.32	-74.01
	87.21	11.67	6.05	4.04	3.76	4.08	68.73	77.46
4	4.06	86.30	73.06	194.00	317.00	154.00	**********	**********
	5.00	-20.45	-12.46	-4.83	-11.51	-10.16	70.36	-77.04
	86.81	12.00	1.30	9.19	3.29	3.43	82.06	77.40
6	8.01	87.02	73.00	132.00	318.00	151.20	**********	**********
	0.00	-23.20	-15.00	-6.43	-15.40	-23.15	86.03	-81.30
	86.52	13.24	1.56	6.33	3.10	3.02	84.02	77.21
8	12.01	87.06	75.30	142.00	321.00	143.10	**********	**********
	0.00	-26.20	-18.46	-12.16	-19.26	-26.57	81.15	-85.20
	81.75	12.11	0.46	4.53	2.88	2.26	86.36	76.84
12	22.06	86.01	79.00	102.00	316.30	113.20	**********	**********
	0.00	-30.01	-25.02	-21.00	-26.90	-33.22	46.16	-85.48
	90.43	9.56	-0.15	-0.56	1.71	-0.57	71.25	76.48

PROPULSIVE WING FLOW FIELD

RAKE SUMMARY, RUN 114

PT	ALPHA BETA HEIGHT	VT1 ALP1 BET1	VT2 ALP2 BET2	VT3 ALP3 BET3	VT4 ALP4 BET4	VT5 ALP5 BET5	VT6 ALP6 BET6	VT7 ALP7 BET7
16	-0.02	151.96	156.20	155.00	156.20	154.20	156.40	153.00
	0.00	-2.04	-1.50	-2.26	-2.04	-2.16	-2.16	-2.00
	66.15	7.66	6.33	7.56	5.46	6.76	6.76	6.17
18	4.01	152.00	156.00	154.00	155.20	154.50	156.70	156.10
	5.00	-5.20	-5.00	-5.22	-5.76	-4.55	-4.17	-3.77
	64.26	8.50	7.03	8.06	4.36	4.03	5.41	5.20
20	8.02	152.40	157.10	134.10	154.00	151.70	155.00	155.00
	5.00	-8.00	-8.56	-8.70	-8.03	-6.03	-6.03	-5.56
	66.16	9.33	6.56	7.05	2.25	3.11	3.77	3.00
27	12.06	153.00	157.00	122.70	154.00	153.70	154.30	155.30
	5.00	-11.10	-11.47	-8.53	-10.02	-8.54	-7.73	-7.25
	63.03	8.00	6.00	-0.34	0.45	1.30	2.30	2.06
37	22.00	126.20	131.20	153.00	154.00	156.00	156.20	157.30
	5.00	-21.41	-19.03	-12.53	-11.00	-10.07	-8.07	-5.16
	66.11	-10.30	-17.96	-5.00	-4.25	-2.37	-0.51	-0.00

PROPULSIVE WING FLOW FIELD

RAKE SUMMARY, RUN 115

PT	ALPHA BETA HEIGHT	VT1 ALP1 BET1	VT2 ALP2 BET2	VT3 ALP3 BET3	VT4 ALP4 BET4	VT5 ALP5 BET5	VT6 ALP6 BET6	VT7 ALP7 BET7
2	0.00	125.00	129.00	174.00	300.30	147.10	126.00	120.20
	5.00	-7.49	-7.02	-2.00	-7.54	-9.20	-3.00	-3.16
	60.00	8.70	7.29	7.63	4.00	7.34	7.14	6.70
4	4.01	129.10	128.30	161.20	250.00	137.00	129.10	126.00
	5.00	-10.33	-10.26	-5.00	-11.51	-10.41	-8.20	-5.47
	60.54	9.83	8.20	7.02	4.60	5.42	5.04	4.97
6	8.02	126.20	130.50	200.00	344.00	129.00	124.00	126.40
	5.00	-13.04	-13.95	-8.00	-15.30	-11.06	-8.48	-7.90
	60.43	10.13	8.23	7.60	4.24	3.14	3.16	3.26
8	12.02	127.00	132.30	220.30	320.00	125.40	122.00	127.70
	5.00	-16.50	-16.74	-12.00	-18.13	-13.04	-10.60	-9.63
	63.76	9.26	7.30	6.02	3.62	6.04	1.46	1.70
13	22.10	126.50	140.40	261.70	340.00	130.00	121.00	125.20
	5.00	-27.00	-25.43	-20.53	-27.01	-17.91	-15.41	-14.00
	60.53	-1.46	-2.16	0.04	0.04	-2.20	-1.66	-0.40

PROPULSIVE WING FLOW FIELD

RAKE SUMMARY, RUN 116

PT	ALPHA BETA HEIGHT	VT1 ALP1 BET1	VT2 ALP2 BET2	VT3 ALP3 BET3	VT4 ALP4 BET4	VT5 ALP5 BET5	VT6 ALP6 BET6	VT7 ALP7 BET7
2	-0.04	86.34	91.58	136.50	334.30	153.00	87.04	92.06
	5.00	-10.70	-8.06	-2.77	-7.43	-13.15	-3.47	-2.00
	64.00	10.52	7.29	7.36	4.96	7.63	6.77	6.22
4	4.00	90.40	92.42	156.30	334.10	142.00	88.06	94.24
	5.00	-13.01	-12.24	-5.57	-11.47	-16.50	-8.75	-5.00
	66.56	11.96	7.01	7.60	4.46	6.17	4.00	4.32
6	8.02	90.02	92.05	161.00	332.20	126.00	88.06	93.75
	5.00	-17.07	-15.76	-9.36	-15.32	-18.41	-8.58	-6.02
	66.40	11.60	7.02	7.05	4.23	4.42	2.73	2.00
8	12.04	92.00	94.00	175.00	324.00	114.70	84.01	93.11
	5.00	-20.01	-19.00	-12.46	-18.32	-19.07	-10.75	-10.46
	64.50	10.02	6.36	6.52	3.75	2.70	0.00	1.16
13	22.03	95.01	100.70	206.30	288.00	92.63	80.06	89.02
	5.00	-29.65	-27.05	-20.06	-28.32	-23.13	-18.26	-18.47
	66.22	1.05	-2.31	2.06	2.54	-1.51	-1.74	-0.05

PROPULSIVE WING FLOW FIELD

RAKE SUMMARY, RUN 117

PI	ALPHA BETA HEIGHT	VT1 ALP1 BET1	VT2 ALP2 BET2	VT3 ALP3 BET3	VT4 ALP4 BET4	VT5 ALP5 BET5	VT6 ALP6 BET6	VT7 ALP7 BET7
2	0.00	53.00	67.50	117.00	312.00	160.00	60.00	71.00
	5.00	-14.78	-12.05	-1.05	-7.54	-15.10	-2.17	-2.38
	83.53	14.00	7.30	7.13	4.10	7.00	6.25	4.76
4	4.00	64.63	67.01	123.20	315.50	156.00	60.34	70.07
	5.00	-16.01	-15.70	-5.00	-11.55	-10.18	-5.01	-5.42
	86.00	14.00	6.10	7.60	4.27	6.00	4.26	3.50
6	8.04	65.00	68.07	121.00	316.00	150.50	58.45	70.81
	5.00	-21.23	-10.47	-8.24	-15.34	-23.43	-7.54	-8.07
	86.05	15.04	6.20	7.37	4.13	5.34	2.23	1.95
8	12.03	60.07	66.15	120.00	316.40	130.00	56.63	60.06
	5.00	-26.14	-21.00	-13.11	-10.26	-26.46	-10.24	-11.05
	86.26	13.00	6.06	6.51	3.88	4.12	0.05	0.51
13	22.00	68.54	73.46	102.00	200.00	104.40	54.30	67.63
	5.00	-34.00	-28.54	-21.47	-28.00	-32.15	-15.07	-18.30
	86.41	4.11	-9.01	2.06	3.04	1.06	-3.32	-1.44

PROPULSIVE WING FLOW FIELD

RAKE SUMMARY, RUN 118

PI	ALPHA BETA HEIGHT	VT1 ALP1 BET1	VT2 ALP2 BET2	VT3 ALP3 BET3	VT4 ALP4 BET4	VT5 ALP5 BET5	VT6 ALP6 BET6	VT7 ALP7 BET7
29	-0.01	149.00	153.00	152.70	153.10	152.50	153.00	148.00
	0.00	-3.06	-2.72	-3.27	-3.18	-2.05	-1.05	-1.21
	85.91	3.23	3.10	4.05	1.00	2.15	2.63	2.48
31	4.08	150.70	154.00	152.00	153.00	152.70	153.40	150.00
	0.00	-5.07	-5.75	-6.05	-5.82	-4.52	-3.01	-3.53
	84.27	4.26	4.10	5.10	0.26	0.56	1.19	0.09
33	8.05	150.00	150.20	130.30	153.40	152.40	152.00	152.20
	0.00	-8.18	-8.06	-10.45	-8.45	-7.13	-6.00	-5.77
	84.38	4.03	4.02	2.78	-1.50	-1.10	0.21	-0.31
35	12.00	151.00	150.70	120.00	154.00	152.70	152.00	153.10
	0.00	-11.42	-11.02	-10.01	-10.10	-8.01	-7.88	-7.35
	84.17	4.77	4.40	-5.03	-3.55	-2.70	-1.50	-1.01
40	22.02	105.00	122.00	152.10	150.10	150.70	150.00	150.10
	0.00	-24.02	-20.70	-15.23	-12.70	-10.22	-8.44	-8.05
	88.10	-31.20	-24.34	-14.00	-10.52	-8.37	-8.43	-8.11

PROPULSIVE WING FLOW FIELD

RAKE SUMMARY, RUN 110

PT	ALPHA BETA HEIGHT	VT1 ALP1 BET1	VT2 ALP2 BET2	VT3 ALP3 BET3	VT4 ALP4 BET4	VT5 ALP5 BET5	VT6 ALP6 BET6	VT7 ALP7 BET7
3	-0.02	151.40	158.40	154.90	154.20	153.30	154.70	156.60
	0.00	-3.23	-2.58	-2.77	-2.73	-2.10	-1.81	-1.60
	87.86	3.41	2.81	3.73	1.33	1.05	2.32	2.17
8	3.00	152.20	156.00	154.10	154.80	153.70	154.50	155.10
	0.06	-5.73	-5.62	-6.84	-5.48	-4.51	-3.93	-3.60
	88.08	4.38	4.04	4.95	-0.18	0.62	1.00	0.81
10	8.02	153.50	157.60	133.50	155.40	154.00	154.30	156.10
	0.00	-8.14	-8.52	-10.28	-8.12	-7.14	-6.12	-6.02
	88.91	4.33	4.37	2.51	-1.91	-1.13	-0.41	-0.41
12	11.98	154.20	158.40	122.30	155.40	154.20	134.80	156.10
	0.00	-11.18	-11.63	-10.68	-10.00	-8.86	-7.88	-7.65
	87.33	4.57	4.28	-4.91	-3.63	-2.75	-1.87	-1.55
17	21.98	168.30	121.50	154.40	161.90	160.90	160.40	161.00
	0.00	-23.10	-18.82	-14.67	-12.23	-10.01	-8.32	-8.62
	87.80	-30.60	-23.88	-13.87	-10.48	-8.32	-6.53	-6.10

PROPULSIVE WING FLOW FIELD

RAKE SUMMARY, RUN 120

PT	ALPHA BETA HEIGHT	VT1 ALP1 BET1	VT2 ALP2 BET2	VT3 ALP3 BET3	VT4 ALP4 BET4	VT5 ALP5 BET5	VT6 ALP6 BET6	VT7 ALP7 BET7
2	-0.01	128.30	128.60	175.80	360.20	140.90	126.90	129.00
	0.00	-7.07	-7.00	-3.14	-7.68	-7.35	-3.48	-3.02
	90.05	3.90	3.34	4.94	3.65	2.87	2.93	2.00
4	3.98	126.80	128.40	190.80	351.40	135.60	126.10	128.00
	0.00	-9.97	-10.21	-8.02	-11.71	-9.81	-5.94	-5.20
	86.80	4.78	4.05	5.10	2.37	0.70	0.40	0.30
6	6.03	127.60	130.60	209.50	340.30	128.50	125.40	127.30
	0.00	-12.81	-13.32	-9.14	-15.58	-11.65	-6.42	-7.87
	87.24	5.04	4.21	4.98	3.04	-1.28	-1.30	-0.88
8	11.98	128.90	131.60	228.90	319.80	125.80	124.20	128.80
	0.00	-15.77	-16.52	-12.27	-18.24	-13.53	-10.72	-9.78
	85.75	4.01	3.11	4.23	2.25	-3.30	-2.79	-2.34
13	22.00	133.20	133.60	279.60	262.00	120.90	121.80	122.30
	0.00	-21.93	-23.86	-21.41	-27.72	-18.84	-15.88	-14.70
	98.10	-7.11	-10.34	-1.87	-0.33	-6.57	-5.16	-4.66

PROPULSIVE WING FLOW FIELD

RAKE SUMMARY, RUN 121

PT	ALPHA BETA HEIGHT	VT1 ALP1 BET1	VT2 ALP2 BET2	VT3 ALP3 BET3	VT4 ALP4 BET4	VT5 ALP5 BET5	VT6 ALP6 BET6	VT7 ALP7 BET7
2	-0.01	88.46	88.17	142.30	336.20	150.30	88.86	89.52
	0.00	-9.30	-10.05	-3.18	-7.57	-13.85	-3.00	-2.08
	90.56	3.97	4.32	5.07	3.78	3.95	1.91	1.95
4	3.98	88.81	88.27	153.70	336.70	139.90	88.02	87.82
	0.00	-11.99	-13.41	-8.19	-11.54	-16.59	-5.67	-5.10
	88.17	4.76	5.18	5.48	3.56	3.02	0.11	0.16
6	7.98	89.58	91.14	182.40	334.80	124.10	88.96	88.[illegible]
	0.00	-14.95	-15.78	-9.91	-15.52	-17.50	-8.18	-7.01
	84.37	5.40	4.84	5.54	3.31	1.30	-1.14	-0.98
8	12.00	90.89	92.81	179.20	317.10	110.30	88.13	84.81
	0.00	-17.88	-18.50	-12.82	-19.41	-19.37	-10.92	-9.16
	81.72	4.37	3.29	4.81	3.02	-0.87	-2.80	-2.41
13	21.99	95.18	95.70	207.90	290.70	92.31	83.38	80.44
	0.00	-22.71	-24.30	-22.00	-28.85	-23.20	-18.33	-13.98
	98.11	-4.72	-8.56	-0.80	1.50	-5.45	-5.12	-5.22

PROPULSIVE WING FLOW FIELD

RAKE SUMMARY, RUN 122

PT	ALPHA BETA HEIGHT	VT1 ALP1 BET1	VT2 ALP2 BET2	VT3 ALP3 BET3	VT4 ALP4 BET4	VT5 ALP5 BET5	VT6 ALP6 BET6	VT7 ALP7 BET7
2	-0.01	82.90	83.23	120.20	305.20	158.20	81.92	57.44
	0.00	-13.04	-14.05	-2.98	-7.85	-15.84	-1.45	-0.71
	91.28	3.87	7.91	6.27	3.80	5.00	2.84	2.79
4	3.99	83.21	83.34	127.30	306.80	149.40	81.58	55.84
	0.00	-15.88	-17.54	-6.71	-11.58	-18.87	-4.26	-2.74
	87.96	4.92	8.12	6.38	3.85	4.00	0.95	0.53
6	7.98	83.24	84.29	133.50	308.50	140.80	80.78	55.12
	0.00	-18.08	-21.01	-10.29	-15.55	-22.92	-7.38	-5.20
	83.07	4.91	8.44	6.80	3.88	3.56	-0.87	-1.64
8	12.00	84.27	85.14	144.30	312.20	132.70	80.14	53.38
	0.00	-20.61	-23.70	-13.41	-19.40	-28.23	-8.54	-6.84
	84.07	4.30	6.26	4.87	3.39	2.30	-2.03	-3.03
13	21.99	88.57	88.70	185.10	304.50	108.40	58.83	50.06
	0.00	-26.57	-27.73	-22.88	-29.12	-32.73	-15.73	-9.58
	98.08	-1.58	-4.91	0.88	2.44	0.00	-4.56	-8.92

PROPULSIVE WING FLOW FIELD

RAKE SUMMARY, RUN 123

PT	ALPHA BETA WEIGHT	VT1 ALP1 BET1	VT2 ALP2 BET2	VT3 ALP3 BET3	VT4 ALP4 BET4	VT5 ALP5 BET5	VT6 ALP6 BET6	VT7 ALP7 BET7
2	0.01	153.00	155.80	155.40	155.40	154.80	156.20	152.60
	5.01	-2.28	-2.48	-3.02	-2.70	-1.90	-1.93	-1.42
	90.18	7.82	7.73	8.93	6.84	6.82	7.12	7.44
4	4.02	153.00	155.90	151.40	155.50	154.80	156.10	152.40
	5.01	-4.84	-5.25	-6.05	-5.54	-4.25	-4.02	-3.35
	88.10	8.82	8.97	10.20	4.84	4.87	5.57	5.72
6	7.99	153.30	156.20	130.70	155.30	154.20	155.80	152.00
	5.01	-7.89	-8.43	-9.88	-7.80	-6.53	-5.87	-4.83
	87.41	9.28	9.63	8.38	2.83	2.99	3.93	4.21
8	11.99	154.00	157.00	122.30	155.20	154.20	155.30	151.10
	5.01	-10.88	-11.47	-9.88	-8.98	-6.38	-7.82	-6.51
	84.87	9.00	9.60	0.19	1.25	1.38	2.88	2.93

PROPULSIVE WING FLOW FIELD

RAKE SUMMARY, RUN 122

PT	ALPHA BETA WEIGHT	VT1 ALP1 BET1	VT2 ALP2 BET2	VT3 ALP3 BET3	VT4 ALP4 BET4	VT5 ALP5 BET5	VT6 ALP6 BET6	VT7 ALP7 BET7
51	10.01	155.00	158.80	157.00	157.50	156.20	157.90	158.30
	0.00	1.85	1.49	1.66	0.41	0.71	0.40	-0.40
	85.20	2.53	2.00	1.00	1.26	1.10	1.95	1.50

PROPULSIVE WING FLOW FIELD

RAKE SUMMARY, RUN 133

PT	ALPHA / BETA / HEIGHT	VT1 / ALP1 / BET1	VT2 / ALP2 / BET2	VT3 / ALP3 / BET3	VT4 / ALP4 / BET4	VT5 / ALP5 / BET5	VT6 / ALP6 / BET6	VT7 / ALP7 / BET7
7	0.00	153.80	156.20	156.20	158.30	156.40	158.00	160.00
	0.00	-0.27	0.26	0.30	-0.19	0.51	0.19	-0.12
	86.71	2.91	2.27	2.50	2.23	2.19	2.49	2.23
8	0.01	153.00	157.80	157.80	157.70	156.20	157.50	159.30
	-2.03	0.10	0.72	0.70	0.12	0.52	0.60	0.26
	86.71	1.22	0.94	0.70	0.38	0.45	0.67	0.33

PROPULSIVE WING FLOW FIELD

RAKE SUMMARY, RUN 148

PT	ALPHA / BETA / HEIGHT	VT1 / ALP1 / BET1	VT2 / ALP2 / BET2	VT3 / ALP3 / BET3	VT4 / ALP4 / BET4	VT5 / ALP5 / BET5	VT6 / ALP6 / BET6	VT7 / ALP7 / BET7
3	-0.01	150.20	102.20	156.90	142.50	103.50	14.50	20.20
	0.00	-14.23	-14.43	-15.07	-19.72	-23.05	-22.07	-33.82
	90.00	3.60	5.06	4.02	6.67	11.00	-60.95	30.05
5	4.04	158.90	161.90	155.10	133.00	96.40	12.50	17.04
	0.00	-18.30	-18.93	-18.06	-23.04	-26.00	-42.73	-45.78
	85.71	4.75	5.63	5.45	7.76	7.05	-80.20	31.00
7	8.07	157.70	157.20	151.70	120.00	87.00	13.05	15.47
	0.00	-17.50	-18.00	-21.32	-25.08	-26.03	-23.02	-52.00
	85.72	5.45	5.15	6.21	5.51	-0.07	-86.00	-19.53
9	12.01	158.00	160.30	148.20	120.30	92.04	3.50	18.22
	0.00	-20.22	-20.48	-24.27	-28.70	-26.14	-51.41	-31.15
	85.05	3.63	1.84	2.77	-0.45	-8.00	0.27	-53.48
14	22.04	71.07	80.20	85.07	76.72	96.10	5.13	34.44
	0.00	-40.10	-37.30	-35.20	-25.00	-8.71	-54.21	15.07
	86.10	-46.14	-47.60	-48.02	-44.35	-21.42	30.07	-38.54

PROPULSIVE WING FLOW FIELD

RAKE SUMMARY, RUN 149

PT	ALPHA BETA HEIGHT	VT1 ALP1 BET1	VT2 ALP2 BET2	VT3 ALP3 BET3	VT4 ALP4 BET4	VT5 ALP5 BET5	VT6 ALP6 BET6	VT7 ALP7 BET7
2	0.01	126.70	130.00	133.30	134.00	122.90	10.23	43.56
	0.00	-29.00	-29.00	-31.82	-33.46	-36.90	10.00	-46.02
	66.11	7.16	7.75	7.06	7.63	6.82	-88.23	6.04
4	4.02	126.00	132.20	135.00	136.40	134.40	8.54	43.82
	0.00	-32.96	-33.86	-35.52	-37.20	-40.07	16.10	-52.05
	64.37	7.07	7.92	7.25	9.63	4.07	-78.10	6.07
6	8.02	129.20	133.70	136.00	137.50	135.10	10.70	43.00
	0.00	-37.07	-38.25	-38.84	-41.00	-43.10	-3.07	-56.70
	64.52	7.57	8.04	9.46	3.30	1.07	-82.90	1.31
8	12.03	132.50	137.50	140.00	141.00	137.00	10.20	42.77
	0.00	-42.04	-42.06	-43.98	-44.46	-46.04	53.95	-50.06
	65.00	7.34	8.04	4.13	1.50	-0.30	-88.14	-1.04
13	22.04	145.70	151.30	152.30	152.40	147.50	12.46	38.06
	0.00	-50.78	-55.33	-54.95	-53.50	-52.78	26.03	-65.50
	98.83	2.43	-0.07	-4.12	-8.44	-7.46	-82.56	-10.79

PROPULSIVE WING FLOW FIELD

RAKE SUMMARY, RUN 150

PT	ALPHA BETA HEIGHT	VT1 ALP1 BET1	VT2 ALP2 BET2	VT3 ALP3 BET3	VT4 ALP4 BET4	VT5 ALP5 BET5	VT6 ALP6 BET6	VT7 ALP7 BET7
2	0.06	102.30	105.30	107.00	109.00	100.70	11.94	37.53
	0.00	-32.00	-32.79	-35.27	-37.53	-41.41	27.46	-46.81
	60.46	8.41	8.07	9.30	8.35	8.16	-88.40	6.70
4	4.06	103.70	107.10	110.10	112.00	111.00	11.75	36.20
	0.00	-36.20	-36.96	-38.17	-41.46	-45.14	47.08	-52.46
	85.61	9.42	9.42	8.06	7.46	9.61	-83.00	3.70
6	8.06	105.20	108.10	112.10	114.00	113.50	11.37	36.00
	0.00	-41.71	-42.00	-44.13	-46.82	-48.91	0.05	-57.00
	84.00	8.00	8.43	7.02	4.54	2.97	-84.40	0.00
8	12.03	108.00	113.00	115.00	118.00	116.70	12.27	38.00
	0.00	-46.73	-46.82	-48.56	-48.94	-52.22	11.20	-61.10
	85.00	8.03	7.36	5.04	3.00	1.10	-88.00	-1.00
13	22.03	118.20	123.50	125.00	127.00	126.20	10.00	30.00
	0.00	-61.50	-60.06	-60.95	-60.00	-61.83	-2.81	-71.70
	98.22	0.05	3.26	-0.45	-4.53	-7.06	-82.06	-8.51

PROPULSIVE. WING FLOW FI

RAKE SUMMARY. RUN 151

PT	ALPHA BETA HEIGHT	VT1 ALP1 BET1	VT2 ALP2 BET2	VT3 ALP3 BET3	VT4 ALP4 BET4	VT5 ALP5 BET5	V. AL.6 BET6	VT7 ALP7 BLT7
2	0.00	73.00	75.57	77.46	78.75	80.82	11.47	28.46
	0.00	-35.52	-36.17	-38.89	-41.19	-48.25	22.19	-48.00
	85.14	10.56	10.49	11.47	10.72	11.63	-84.26	7.24
4	4.00	74.07	76.56	78.79	81.26	82.44	10.40	28.93
	0.00	-40.01	-40.82	-43.30	-45.79	-50.64	4.53	-53.76
	85.73	11.87	11.33	11.77	10.23	10.37	-88.25	5.13
6	8.05	75.22	77.83	80.59	83.53	84.73	12.00	29.46
	0.00	-45.77	-48.98	-49.01	-51.19	-55.88	38.24	-56.81
	84.38	11.43	10.42	9.74	7.14	8.27	-85.07	0.55
7	10.00	78.88	80.45	83.06	85.88	86.00	11.00	29.53
	0.00	-46.58	-49.95	-51.34	-53.33	-57.10	29.01	-60.20
	88.70	11.73	9.92	8.77	6.15	5.06	-85.85	1.38
8	12.05	77.82	81.15	83.97	86.73	87.74	10.00	30.18
	0.00	-51.20	-51.53	-53.74	-55.46	-59.15	28.52	-62.27
	88.93	11.88	9.88	8.74	5.90	4.98	-84.24	0.80
13	22.05	85.87	90.82	93.10	98.02	95.00	12.58	31.80
	0.00	-65.84	-65.81	-67.45	-68.36	-70.12	-84.55	-72.34
	90.51	12.19	9.73	8.02	1.61	-1.77	88.68	-9.68

PROPULSIVE WING FLOW FIELD

RAKE SUMMARY. RUN 152

PT	ALPHA BETA HEIGHT	VT1 ALP1 BET1	VT2 ALP2 BET2	VT3 ALP3 BET3	VT4 ALP4 BET4	VT5 ALP5 BET5	VT6 ALP6 BET6	VT7 ALP7 BET7
2	0.01	126.50	130.70	134.10	135.00	134.50	10.30	43.40
	5.00	-30.20	-28.58	-31.27	-33.50	-36.21	8.07	-40.30
	83.05	15.00	15.72	15.70	15.21	15.20	88.72	10.54
4	4.05	127.00	132.70	136.40	138.20	138.70	10.24	43.51
	5.00	-32.01	-32.72	-35.40	-37.67	-40.00	73.14	-53.72
	84.30	16.12	16.12	15.40	13.92	13.34	-88.47	10.63
6	8.04	129.40	134.80	138.50	140.20	138.00	10.20	43.04
	5.00	-36.57	-37.30	-40.11	-41.84	-43.02	-24.45	-56.82
	83.05	16.47	15.34	13.40	10.87	9.36	-87.25	11.00
8	12.00	132.00	138.20	141.30	142.00	138.30	10.52	42.38
	5.00	-42.21	-42.76	-44.88	-45.83	-47.04	-57.61	-62.49
	88.01	15.13	12.54	9.35	5.47	3.09	88.42	5.34
10	18.01	136.00	144.10	147.00	147.00	143.40	8.74	43.38
	5.00	-48.40	-48.41	-49.82	-49.40	-50.17	-73.82	-68.54
	88.34	13.63	8.41	5.31	1.66	-1.51	-90.77	-3.50
13	22.03	148.20	155.00	156.40	156.50	150.00	8.00	44.07
	5.00	-57.50	-58.27	-58.12	-55.17	-55.03	-75.74	-70.00
	88.05	4.76	0.07	-4.00	-8.16	-10.33	-77.00	-10.45

PROPULSIVE WING FLOW FIELD

RAKE SUMMARY, RUN 163

PT	ALPHA BETA HEIGHT	VT1 ALP1 BET1	VT2 ALP2 BET2	VT3 ALP3 BET3	VT4 ALP4 BET4	VT5 ALP5 BET5	VT6 ALP6 BET6	VT7 ALP7 BET7
16	0.01	156.80	164.20	156.30	140.80	101.10	7.38	20.70
	-0.01	-14.37	-13.77	-15.10	-19.52	-24.38	-41.12	-34.80
	80.70	4.81	4.84	4.70	5.83	11.44	-40.26	32.21
18	4.07	156.10	162.80	153.80	132.00	95.44	8.86	17.15
	-0.01	-16.87	-15.98	-18.32	-23.15	-28.54	-53.13	-42.51
	85.87	5.75	5.84	5.57	7.41	8.13	-48.14	15.37
20	8.04	156.40	158.80	148.40	125.10	82.11	7.41	15.90
	-0.01	-17.75	-17.11	-20.82	-25.46	-25.56	-50.92	-46.31
	84.63	6.23	4.77	6.46	5.20	9.08	-57.87	-20.06
22	12.06	156.00	161.50	148.00	122.70	83.26	7.08	17.27
	-0.01	-20.44	-20.38	-24.07	-28.27	-26.56	-70.44	-25.30
	84.75	4.68	1.98	2.81	-1.23	-8.92	-41.36	-33.80
27	21.98	87.58	86.87	87.16	83.31	87.78	8.49	33.29
	-0.01	-44.15	-37.15	-34.73	-27.84	-14.18	-74.33	12.64
	87.73	-47.37	-42.58	-44.32	-40.65	-22.50	-94.08	-37.11

PROPULSIVE WING FLOW FIELD

RAKE SUMMARY, RUN 164

PT	ALPHA BETA HEIGHT	VT1 ALP1 BET1	VT2 ALP2 BET2	VT3 ALP3 BET3	VT4 ALP4 BET4	VT5 ALP5 BET5	VT6 ALP6 BET6	VT7 ALP7 BET7
2	0.01	156.70	164.00	160.50	150.10	116.00	8.40	20.10
	5.40	-14.42	-12.83	-14.88	-17.78	-20.14	-40.88	-28.77
	80.50	9.31	9.06	9.74	10.36	10.02	-68.36	38.04
4	4.00	156.50	164.70	158.70	151.30	121.10	8.70	23.00
	5.00	-17.23	-16.96	-18.24	-21.28	-21.08	-43.15	-28.98
	85.23	10.54	10.07	10.80	11.98	10.05	-48.18	31.73
6	8.00	160.20	165.30	158.10	145.50	113.30	7.93	18.10
	5.00	-18.07	-18.07	-21.17	-24.32	-24.70	-50.38	-47.40
	85.54	10.83	10.12	11.17	12.37	11.54	-88.34	34.14
8	12.07	161.00	166.00	157.00	138.30	104.40	8.01	11.71
	5.00	-24.17	-23.81	-24.75	-27.75	-25.14	-80.58	-22.20
	88.90	9.06	7.77	7.95	8.95	9.72	-71.75	-11.79
13	22.11	82.00	78.90	101.00	107.00	103.70	8.98	30.42
	5.00	-61.88	-38.34	-30.75	-29.38	-16.81	-58.73	15.44
	90.29	-29.38	-35.38	-38.25	-35.19	-22.77	-80.51	-28.38

PROPULSIVE WING FLOW FIELD

RAKE SUMMARY, RUN 105

PT	ALPHA BETA HEIGHT	VT1 ALP1 BET1	VT2 ALP2 BET2	VT3 ALP3 BET3	VT4 ALP4 BET4	VT5 ALP5 BET5	VT6 ALP6 BET6	VT7 ALP7 BET7
2	-0.02	100.30	105.20	102.40	156.80	140.30	8.82	33.83
	10.01	-14.27	-13.04	-15.24	-17.64	-19.14	-57.52	-28.46
	86.71	14.02	13.82	14.81	15.40	20.05	-87.01	42.55
4	-0.02	100.30	105.50	161.40	153.40	120.50	7.01	28.82
	8.00	-14.50	-12.90	-15.00	-17.75	-19.17	-36.87	-26.06
	86.71	10.22	9.87	10.85	11.06	17.46	-56.06	40.04

PROPULSIVE WING FLOW FIELD

RAKE SUMMARY, RUN 170

PT	ALPHA BETA HEIGHT	VT1 ALP1 BET1	VT2 ALP2 BET2	VT3 ALP3 BET3	VT4 ALP4 BET4	VT5 ALP5 BET5	VT6 ALP6 BET6	VT7 ALP7 BET7
2	-0.02	126.70	131.90	129.40	132.40	132.00	9.75	43.06
	0.00	-29.22	-27.61	-30.20	-32.05	-35.00	-41.00	-47.24
	87.76	8.06	6.00	7.30	4.61	6.61	-75.33	6.29
4	4.06	126.00	133.40	131.90	131.40	133.90	9.30	43.63
	0.00	-33.17	-31.08	-34.14	-36.90	-38.51	-55.21	-51.53
	86.81	9.00	6.90	6.06	3.52	4.63	-84.50	3.23
6	8.00	129.30	136.10	133.40	140.00	134.10	8.07	43.24
	0.00	-38.12	-36.20	-38.32	-40.12	-42.40	-52.72	-96.70
	85.82	9.95	6.07	5.12	1.10	1.00	-84.07	-1.02
8	12.07	132.40	138.50	137.00	138.40	134.70	8.06	42.05
	0.00	-42.93	-40.07	-42.53	-45.42	-45.20	-63.83	-98.17
	88.11	9.24	5.32	3.06	-0.47	-6.26	-57.77	-5.34
13	22.06	145.00	151.70	149.00	151.00	146.10	8.22	36.25
	0.00	-56.74	-53.31	-53.10	-52.04	-51.70	-62.11	-96.06
	96.75	4.02	-1.02	-4.42	-7.04	-6.70	-63.13	-14.72

PROPULSIVE WING FLOW FIELD

RAKE SUMMARY, RUN 171

PT	ALPHA / BETA / HEIGHT	VT1 / ALP1 / BET1	VT2 / ALP2 / BET2	VT3 / ALP3 / BET3	VT4 / ALP4 / BET4	VT5 / ALP5 / BET5	VT6 / ALP6 / BET6	VT7 / ALP7 / BET7
2	0.02	103.20	107.20	104.00	107.00	100.30	7.27	38.20
	0.00	-32.78	-30.06	-33.67	-37.20	-41.10	-27.04	-47.25
	85.85	11.36	7.43	6.57	4.40	7.61	-17.40	4.15
4	4.01	104.30	108.70	105.40	109.60	110.00	6.05	38.47
	0.00	-36.06	-34.11	-37.55	-41.11	-44.51	-30.09	-51.00
	86.03	12.17	7.71	6.34	3.62	6.26	-34.11	1.77
7	12.00	108.40	114.40	112.00	116.50	116.40	7.00	30.17
	0.00	-47.10	-44.43	-47.27	-48.17	-51.05	-70.15	-50.28
	86.03	11.52	6.07	5.12	-0.34	1.02	-86.30	-3.30
12	22.00	119.10	124.00	123.00	126.00	124.00	9.00	40.52
	0.00	-61.00	-58.22	-58.66	-58.86	-61.22	-70.73	-69.48
	90.14	9.22	2.30	-1.31	-7.38	-6.98	-70.11	-11.15

PROPULSIVE WING FLOW FIELD

RAKE SUMMARY, RUN 178

PT	ALPHA / BETA / HEIGHT	VT1 / ALP1 / BET1	VT2 / ALP2 / BET2	VT3 / ALP3 / BET3	VT4 / ALP4 / BET4	VT5 / ALP5 / BET5	VT6 / ALP6 / BET6	VT7 / ALP7 / BET7
2	0.00	72.50	75.13	77.43	78.70	80.40	11.[illegible]	26.51
	-0.01	-34.06	-36.54	-39.17	-41.06	-46.34	-63.30	-48.74
	84.20	10.24	12.30	12.00	12.24	12.20	-61.76	6.17
4	4.01	73.26	76.45	79.10	81.04	82.40	10.10	29.10
	0.01	-39.33	-41.36	-43.73	-46.40	-50.75	-65.05	-54.67
	81.72	11.50	12.90	12.04	11.78	10.95	-64.16	6.44
6	3.02	74.87	78.40	81.75	84.51	85.30	11.35	29.90
	-0.01	-46.77	-47.64	-49.56	-51.73	-55.36	-75.63	-57.41
	87.95	11.61	12.10	10.67	8.44	6.93	-64.53	2.13
8	12.03	76.60	80.90	84.42	86.90	87.46	12.10	30.37
	-0.01	-50.57	-52.27	-54.14	-56.11	-58.19	-74.60	-61.36
	85.01	11.24	11.40	9.71	7.66	5.30	-65.90	1.37
13	31.06	84.41	88.95	93.14	95.46	95.21	11.40	32.10
	-0.02	-66.22	-66.40	-67.[illegible]	-68.06	-66.82	-84.02	-72.20
	80.17	12.60	10.30	6.10	2.15	-1.30	-80.54	-6.61

PROPULSIVE WING FLOW FIELD

RAKE SUMMARY, RUN 179

PT	ALPHA BETA HEIGHT	VT1 ALP1 BET1	VT2 ALP2 BET2	VT3 ALP3 BET3	VT4 ALP4 BET4	VT5 ALP5 BET5	VT6 ALP6 BET6	VT7 ALP7 BET7
2	0.01	51.73	54.07	57.25	58.34	58.65	10.81	21.58
	-0.01	-38.06	-42.43	-43.53	-44.93	-50.81	-61.01	-65.86
	84.54	11.31	17.27	17.15	17.95	20.22	-68.21	9.60
4	3.99	52.60	56.16	58.14	61.42	61.60	10.37	22.55
	-0.01	-43.42	-47.18	-48.04	-48.07	-55.26	-66.00	-58.47
	86.00	11.75	17.71	17.11	18.28	17.78	-59.71	9.67
6	6.01	52.79	56.68	58.54	62.01	62.06	10.70	22.47
	-0.01	-48.26	-53.41	-54.93	-58.21	-61.58	-63.58	-54.51
	86.71	12.00	18.00	17.64	15.02	15.88	-71.88	3.92
8	12.00	56.70	60.02	64.13	66.20	66.66	11.26	23.50
	-0.01	-54.40	-58.57	-60.23	-60.23	-64.70	-74.00	-62.14
	83.87	12.24	17.38	15.23	14.15	11.75	-68.72	3.68
13	21.98	60.88	67.21	70.10	72.15	72.80	11.18	24.60
	-0.02	-68.16	-71.88	-72.04	-72.88	-76.53	-77.66	-74.45
	90.32	16.29	18.71	15.12	12.43	7.03	-70.61	-4.41

PROPULSIVE WING FLOW FIELD

RAKE SUMMARY, RUN 180

PT	ALPHA BETA HEIGHT	VT1 ALP1 BET1	VT2 ALP2 BET2	VT3 ALP3 BET3	VT4 ALP4 BET4	VT5 ALP5 BET5	VT6 ALP6 BET6	VT7 ALP7 BET7
2	0.00	36.85	40.77	43.04	44.00	43.41	11.53	14.56
	-0.01	-43.08	-50.48	-47.87	-48.88	-56.20	-54.04	-45.76
	93.40	7.40	27.04	21.03	25.08	24.48	-71.03	1.30
4	4.02	35.80	41.75	44.54	45.81	45.20	11.13	15.05
	-0.01	-48.04	-50.87	-53.26	-51.20	-56.74	-57.53	-48.30
	87.30	8.00	26.03	22.00	27.21	26.36	-64.28	2.46
6	6.00	36.11	44.41	47.27	48.06	48.43	10.04	17.20
	-0.01	-53.30	-60.76	-60.05	-57.04	-65.06	-65.12	-50.50
	84.46	9.16	26.06	23.03	26.10	23.52	-68.50	7.21
8	12.02	36.02	45.00	48.08	48.75	50.07	10.07	17.00
	-0.01	-58.08	-68.74	-64.10	-62.50	-76.48	-66.74	-54.30
	88.51	10.58	31.04	23.95	24.17	22.70	-65.01	6.07
13	31.97	41.68	50.37	53.02	53.04	54.44	11.27	15.00
	-0.02	-72.88	-76.48	-78.38	-74.07	-81.07	-78.08	-71.53
	90.26	17.15	26.14	25.07	27.38	18.08	-73.48	3.21

PROPULSIVE WING FLOW FIELD

RAKE SUMMARY, RUN 104

PT	ALPHA BETA HEIGHT	VT1 ALP1 BET1	VT2 ALP2 BET2	VT3 ALP3 BET3	VT4 ALP4 BET4	VT5 ALP5 BET5	VT6 ALP6 BET6	VT7 ALP7 BET7
3	-0.01	0.12	0.10	0.10	0.11	0.10	0.11	0.10
	-0.01	-0.22	1.43	-0.76	0.56	0.17	1.22	0.26
	86.56	8.26	10.06	11.75	10.81	12.06	10.42	11.01
4	-0.01	157.50	160.60	157.70	141.30	116.70	14.52	16.57
	-0.01	-20.53	-20.94	-20.41	-20.40	-20.22	-6.52	-52.37
	86.56	6.01	4.22	0.52	-0.81	-3.51	76.14	1.22
6	4.05	156.90	165.30	158.20	136.50	104.90	15.81	16.51
	-0.01	-31.19	-24.75	-21.77	-22.67	-22.02	-4.01	-60.04
	85.60	-5.30	-7.17	-6.52	-8.35	-8.93	76.60	-11.26
8	8.01	166.30	167.10	157.60	135.20	103.60	15.81	14.33
	-0.01	-26.58	-23.30	-22.56	-25.63	-24.40	-12.50	-54.73
	85.91	-13.07	-8.50	-7.36	-8.17	-10.75	78.74	-38.48
10	12.10	184.20	183.30	155.30	137.60	108.30	15.73	15.90
	-0.01	-26.60	-25.45	-26.30	-26.76	-27.83	-31.67	-48.84
	86.35	-13.46	-8.87	-9.77	-12.20	-13.43	80.50	-60.76
15	22.06	148.50	154.00	148.40	137.20	114.10	17.76	24.16
	-0.01	-35.30	-35.32	-35.36	-37.62	-32.96	-36.76	-5.42
	84.71	-16.66	-17.26	-20.18	-20.16	-17.46	82.52	-53.13

PROPULSIVE WING FLOW FIELD

RAKE SUMMARY, RUN 102

PT	ALPHA BETA HEIGHT	VT1 ALP1 BET1	VT2 ALP2 BET2	VT3 ALP3 BET3	VT4 ALP4 BET4	VT5 ALP5 BET5	VT6 ALP6 BET6	VT7 ALP7 BET7
3	0.00	135.70	138.00	146.30	147.00	143.10	9.70	47.18
	0.00	-27.35	-30.25	-32.43	-32.08	-37.41	6.05	-50.30
	91.36	7.41	13.12	11.90	13.48	10.67	-70.22	9.82
5	4.01	146.30	145.80	154.40	153.30	151.90	12.51	48.47
	0.00	-33.29	-36.86	-38.31	-40.73	-44.08	0.52	-65.57
	90.50	9.46	14.00	10.83	9.36	2.13	-83.31	-7.01
7	8.03	145.40	152.90	162.20	164.70	163.90	10.76	51.46
	0.00	-46.88	-50.21	-50.71	-50.76	-51.20	33.29	-60.14
	86.38	7.30	8.61	2.10	-2.54	-11.01	-75.20	-22.26
9	12.01	156.50	167.70	173.50	171.00	171.10	0.61	54.11
	0.00	-54.75	-57.74	-58.54	-58.18	-58.81	-1.76	-88.00
	88.48	8.14	8.13	6.35	-6.00	-15.46	-81.01	-27.22

PROPULSIVE WING. FLOW FIELD

RAKE SUMMARY. RUN 103

PT	ALPHA BETA HEIGHT	VT1 ALP1 BET1	VT2 ALP2 BET2	VT3 ALP3 BET3	VT4 ALP4 BET4	VT5 ALP5 BET5	VT6 ALP6 BET6	VT7 ALP7 BET7
2	-0.01	95.80	99.04	107.80	108.20	104.00	13.68	33.90
	0.00	-30.07	-36.61	-36.56	-35.21	-40.17	4.22	-50.95
	87.91	8.41	18.07	14.61	17.86	13.57	-80.50	14.13
4	4.01	97.43	103.00	112.30	114.30	110.30	10.83	36.24
	0.00	-38.20	-41.88	-42.96	-42.57	-47.96	9.51	-57.16
	87.78	8.37	19.46	15.26	17.46	11.56	-77.01	3.16
6	8.00	107.10	114.20	122.50	122.10	118.70	11.23	37.60
	0.00	-43.06	-47.92	-50.06	-50.03	-50.22	10.66	-62.66
	85.45	10.33	18.31	12.60	12.70	2.53	-75.96	-12.12
8	11.90	107.20	115.80	122.90	123.00	123.60	13.06	39.06
	0.00	-54.46	-60.37	-61.12	-61.91	-63.71	10.67	-66.61
	85.00	10.62	17.04	8.43	5.46	-8.90	-70.42	-22.60

PROPULSIVE WING FLOW FIELD

RAKE SUMMARY. RUN 104

PT	ALPHA BETA HEIGHT	VT1 ALP1 BET1	VT2 ALP2 BET2	VT3 ALP3 BET3	VT4 ALP4 BET4	VT5 ALP5 BET5	VT6 ALP6 BET6	VT7 ALP7 BET7
2	-0.02	64.63	70.05	78.05	82.02	74.56	7.83	23.02
	0.00	-31.16	-42.77	-41.52	-38.13	-44.67	25.08	-54.04
	90.34	2.60	30.46	20.10	25.00	10.00	-72.96	10.00
4	3.98	68.50	74.30	83.05	84.03	77.01	10.75	25.31
	0.00	-38.23	-46.20	-47.30	-42.10	-50.61	-17.45	-61.26
	88.13	4.06	32.00	21.02	26.01	16.10	-70.05	13.05
6	8.04	66.07	68.10	88.07	89.41	83.94	10.77	26.07
	0.00	-47.04	-55.07	-54.46	-50.00	-58.15	0.00	-66.32
	88.96	5.30	30.51	16.73	24.26	14.23	-73.61	3.36
8	12.01	76.30	86.50	90.80	97.12	91.36	11.71	26.00
	0.00	-53.10	-58.12	-56.56	-55.04	-63.00	23.40	-68.46
	85.41	9.02	28.53	18.13	22.06	11.07	-68.96	-1.63

PROPULSIVE WING FLOW FIELD

RAKE SUMMARY, RUN 100

PT	ALPHA BETA WEIGHT	VT1 ALP1 BET1	VT2 ALP2 BET2	VT3 ALP3 BET3	VT4 ALP4 BET4	VT5 ALP5 BET5	VT6 ALP6 BET6	VT7 ALP7 BET7
2	0.02	42.55	60.78	65.15	66.82	56.32	12.46	17.10
	0.00	-34.17	-46.30	-48.95	-34.34	-48.02	23.25	-55.10
	92.78	-12.46	53.53	30.79	37.51	34.77	-70.95	47.40
4	4.01	43.11	61.87	66.25	66.37	57.96	9.37	17.[illegible]
	2.00	-36.01	-50.75	-51.53	-37.46	-51.77	22.33	-63.33
	87.32	-7.84	53.66	36.87	30.26	31.40	-73.53	36.51
6	8.01	44.08	64.66	68.96	70.93	61.08	9.64	18.24
	0.00	-44.03	-55.62	-56.18	-43.27	-56.07	4.81	-66.41
	86.12	-5.56	54.13	39.56	37.91	30.87	-73.61	24.03
8	11.00	45.01	66.22	72.82	72.64	64.10	11.84	20.66
	0.00	-55.54	-62.04	-63.73	-50.90	-66.32	14.83	-75.31
	85.50	-6.84	52.11	39.62	36.60	25.90	-75.83	14.14

PROPULSIVE WING FLOW FIELD

RAKE SUMMARY, RUN 100

PT	ALPHA BETA WEIGHT	VT1 ALP1 BET1	VT2 ALP2 BET2	VT3 ALP3 BET3	VT4 ALP4 BET4	VT5 ALP5 BET5	VT6 ALP6 BET6	VT7 ALP7 BET7
10	-0.03	40.15	37.03	36.30	37.26	41.63	41.16	45.10
	-0.01	-36.03	-40.91	-55.76	-46.50	-55.01	-46.75	-57.06
	87.05	24.03	15.03	33.17	16.16	37.43	37.26	45.76
16	4.06	41.57	30.04	36.12	37.76	42.34	42.46	45.54
	-0.01	-41.82	-41.27	-56.27	-54.10	-57.56	-54.90	-58.81
	86.54	26.84	14.26	36.63	16.17	36.86	36.43	46.93

PROPULSIVE WING FLOW FIELD

RAKE SUMMARY, RUN 214

PT	ALPHA BETA HEIGHT	VT1 ALP1 BET1	VT2 ALP2 BET2	VT3 ALP3 BET3	VT4 ALP4 BET4	VT5 ALP5 BET5	VT6 ALP6 BET6	VT7 ALP7 BET7
3	-0.01	158.00	158.20	158.70	141.70	111.40	98.02	104.86
	0.30	-20.23	-21.78	-21.76	-20.88	-20.88	-13.58	-7.21
	84.71	5.04	4.70	0.02	0.58	-3.50	-1.04	3.16
6	4.01	156.49	162.60	157.00	136.70	105.40	93.70	111.00
	0.00	-30.77	-25.02	-22.04	-23.18	-23.28	-14.33	-8.04
	85.01	-5.73	-6.07	-6.40	-4.06	-6.38	-2.81	2.22
8	8.00	154.00	153.40	154.00	133.40	102.70	97.26	119.30
	-0.01	-26.42	-24.17	-24.03	-25.03	-25.50	-14.02	-11.22
	86.31	-13.57	-6.00	-7.05	-7.84	-11.71	-3.13	1.16
10	11.00	162.00	151.00	152.70	133.00	100.40	103.10	125.20
	-0.01	-28.25	-25.00	-26.03	-26.21	-28.28	-18.02	-14.30
	88.24	-13.08	-8.33	-8.48	-11.06	-13.80	-4.05	-0.53

PROPULSIVE WING FLOW FIELD

RAKE SUMMARY, RUN 216

PT	ALPHA BETA HEIGHT	VT1 ALP1 BET1	VT2 ALP2 BET2	VT3 ALP3 BET3	VT4 ALP4 BET4	VT5 ALP5 BET5	VT6 ALP6 BET6	VT7 ALP7 BET7
3	0.01	157.40	158.20	158.50	156.20	125.00	104.40	94.77
	0.00	-18.76	-18.06	-21.20	-20.76	-20.08	-17.80	-12.41
	86.20	5.17	0.01	3.02	2.76	1.73	-1.00	0.23
5	4.00	157.00	158.00	158.00	156.40	130.20	112.50	108.70
	0.00	-31.00	-31.17	-28.03	-25.05	-24.11	-18.42	-12.42
	84.02	3.17	-1.00	-0.40	-0.44	-10.12	-0.88	-4.33
7	8.01	130.70	148.40	156.00	147.20	125.20	113.00	121.40
	0.00	-26.02	-31.20	-27.15	-26.42	-25.03	-20.04	-14.23
	83.83	-16.06	-17.76	-17.02	-14.54	-17.44	-10.83	-2.72
9	12.00	132.10	148.00	154.30	145.40	122.80	108.40	123.30
	-0.01	-28.58	-30.76	-30.40	-31.41	-32.14	-24.87	-15.71
	84.02	-18.25	-17.03	-17.40	-15.66	-18.75	-0.80	-2.86
14	22.03	144.50	156.10	158.50	147.80	126.10	114.50	136.10
	-0.01	-36.71	-38.37	-38.43	-40.06	-37.30	-27.38	-20.56
	84.42	-23.63	-23.13	-24.42	-23.66	-18.45	-8.50	-4.10

PROPULSIVE WING FLOW FIELD

RAKE SUMMARY. RUN 217

PT	ALPHA BETA HEIGHT	VT1 ALP1 BET1	VT2 ALP2 BET2	VT3 ALP3 BET3	VT4 ALP4 BET4	VT5 ALP5 BET5	VT6 ALP6 BET6	VT7 ALP7 BET7
2	0.01	135.30	130.20	143.00	143.80	141.30	144.00	144.10
	0.00	-28.06	-28.97	-31.37	-33.00	-36.90	-38.02	-42.64
	90.25	9.54	11.76	11.45	11.38	10.37	10.53	9.58
4	3.98	137.00	141.10	145.20	145.80	144.00	146.90	147.30
	0.00	-33.21	-34.62	-37.43	-39.59	-43.90	-45.21	-43.68
	88.13	11.38	13.03	11.64	10.44	8.91	4.92	0.80
6	5.02	143.00	148.80	153.10	154.10	153.10	154.70	152.00
	0.00	-43.76	-45.31	-47.58	-48.96	-50.33	-49.22	-49.92
	85.20	10.47	9.60	4.98	-0.07	-5.22	-8.45	-8.75
8	12.00	152.00	158.20	162.40	162.00	160.50	158.50	154.30
	-0.01	-55.26	-56.12	-58.83	-56.85	-58.16	-54.26	-53.3[illegible]
	84.70	6.54	3.25	-3.88	-9.74	-15.00	-12.75	-13.[illegible]5
13	22.03	122.70	133.80	141.20	145.80	149.80	144.00	142.10
	-0.01	-75.16	-72.00	-67.98	-67.32	-65.81	-66.05	-63.85
	92.47	-33.31	-32.82	-37.05	-36.76	-34.53	-25.63	-20.77

PROPULSIVE WING FLOW FIELD

RAKE SUMMARY. RUN 218

PT	ALPHA BETA HEIGHT	VT1 ALP1 BET1	VT2 ALP2 BET2	VT3 ALP3 BET3	VT4 ALP4 BET4	VT5 ALP5 BET5	VT6 ALP6 BET6	VT7 ALP7 BET7
4	0.01	97.02	98.77	100.30	101.40	101.40	104.10	107.90
	0.00	-29.74	-29.80	-31.05	-35.74	-38.63	-40.18	-40.59
	85.70	12.52	12.26	12.86	11.84	12.56	11.17	8.94
6	4.01	99.90	102.60	103.90	1[illegible]5.40	105.80	108.00	112.30
	0.00	-35.83	-36.75	-38.22	-42.68	-46.35	-46.98	-46.04
	85.29	14.87	13.38	13.58	11.83	12.12	10.18	5.08
8	8.00	104.30	107.40	108.50	108.80	110.40	113.00	118.80
	0.00	-42.37	-42.33	-45.02	-50.17	-54.27	-55.04	-51.8[illegible]
	85.04	16.70	13.88	13.08	9.81	7.82	3.80	-2.23
10	11.98	108.70	113.10	113.70	117.30	118.90	117.40	120.40
	-0.01	-52.73	-52.85	-55.61	-56.87	-60.60	-58.31	-53.75
	84.33	14.36	8.57	4.25	-4.24	-8.37	-9.92	-10.68
15	22.01	119.00	125.10	124.20	127.00	127.00	122.50	123.40
	-0.01	-72.82	-68.26	-68.41	-67.38	-67.85	-67.27	-61.24
	95.88	-9.18	-15.00	-21.38	-27.12	-25.02	-20.21	-14.59
16	22.00	119.30	125.30	123.90	127.90	127.90	122.80	123.30
	-0.01	-73.83	-68.40	-67.96	-67.48	-67.88	-67.00	-61.31
	95.81	-9.53	-15.40	-21.85	-27.08	-25.02	-20.79	-15.03

PROPULSIVE WING FLOW FIELD

RAKE SUMMARY, RUN 210

PT	ALPHA BETA HEIGHT	VT1 ALP1 BET1	VT2 ALP2 BET2	VT3 ALP3 BET3	VT4 ALP4 BET4	VT5 ALP5 BET5	VT6 ALP6 BET6	VT7 ALP7 BET7
2	0.00	71.38	72.92	70.30	71.44	73.82	75.13	83.24
	0.00	-32.87	-29.95	-31.50	-40.01	-43.88	-45.01	-37.61
	88.06	17.11	11.68	14.84	11.57	18.25	18.19	6.81
4	4.00	73.00	73.29	71.80	73.18	75.43	77.14	85.81
	0.00	-36.83	-35.06	-37.42	-45.25	-48.12	-48.57	-41.73
	87.16	19.45	13.84	16.12	12.87	17.21	13.75	4.28
6	7.99	74.12	76.21	75.01	76.98	79.54	80.75	88.34
	0.00	-43.38	-42.02	-44.09	-52.61	-55.88	-56.77	-48.12
	88.92	20.88	14.72	15.92	11.48	14.94	9.90	1.80
8	12.00	78.24	80.36	79.42	82.16	84.01	84.38	90.58
	-0.01	-51.31	-50.40	-52.87	-58.83	-62.72	-63.16	-53.92
	87.53	21.26	14.96	14.97	8.92	11.10	6.42	-0.45
13	22.00	90.15	92.74	90.18	95.37	95.51	92.67	95.86
	-0.01	-75.46	-73.13	-74.86	-78.43	-77.76	-75.95	-65.43
	97.70	11.32	2.02	-3.38	-12.68	-11.70	-10.57	-9.76

PROPULSIVE WING FLOW FIELD

RAKE SUMMARY, RUN 220

PT	ALPHA BETA HEIGHT	VT1 ALP1 BET1	VT2 ALP2 BET2	VT3 ALP3 BET3	VT4 ALP4 BET4	VT5 ALP5 BET5	VT6 ALP6 BET6	VT7 ALP7 BET7
15	0.00	157.00	160.70	158.90	148.40	122.00	122.20	145.00
	-0.01	-19.61	-20.56	-20.30	-18.08	-15.02	-9.08	-7.53
	88.93	7.25	4.87	0.84	-1.33	-2.32	0.55	0.06
16	4.05	155.20	164.80	157.10	138.40	107.80	125.20	150.20
	-0.01	-29.77	-23.17	-19.48	-19.07	-14.26	-8.54	-8.07
	87.75	-5.74	-7.14	-8.33	-5.90	-4.08	-0.47	-0.00
17	8.07	163.40	168.10	162.70	151.80	127.70	125.70	151.80
	-0.01	-27.09	-24.48	-23.27	-23.87	-22.02	-14.91	-13.50
	87.15	-14.84	-9.10	-7.18	-6.32	-7.96	-4.32	-2.71
18	12.08	164.20	165.50	158.70	143.30	123.70	126.70	153.80
	-0.01	-26.92	-25.73	-25.29	-26.29	-23.80	-16.87	-15.20
	87.74	-14.01	-9.16	-8.10	-8.53	-10.26	-5.12	-2.74
19	22.02	152.00	156.80	151.80	139.20	117.10	143.50	158.00
	-0.01	-35.74	-36.18	-35.50	-35.00	-29.04	-21.42	-19.77
	94.57	-17.80	-16.79	-18.48	-17.97	-13.00	-4.41	-3.26

PROPULSIVE WING FLOW FIELD

RAKE SUMMARY, RUN 231

PT	ALPHA / BETA / HEIGHT	VT1 / ALP1 / BET1	VT2 / ALP2 / BET2	VT3 / ALP3 / BET3	VT4 / ALP4 / BET4	VT5 / ALP5 / BET5	VT6 / ALP6 / BET6	VT7 / ALP7 / BET7
2	-0.01	133.40	137.00	137.90	138.10	134.70	138.40	138.80
	-0.01	-24.17	-23.78	-25.83	-28.06	-30.24	-30.35	-29.18
	87.80	8.45	9.15	9.62	8.90	9.56	8.80	8.55
4	4.00	135.90	140.00	142.10	142.50	138.10	137.80	139.50
	-0.01	-31.77	-32.13	-34.54	-35.90	-37.15	-35.41	-31.62
	87.18	9.79	8.77	6.52	2.85	0.85	0.85	-0.19
6	8.02	144.10	149.90	151.70	152.50	147.70	143.80	143.00
	-0.01	-43.47	-43.18	-43.68	-42.63	-40.81	-37.86	-33.07
	88.51	8.02	3.97	-1.82	-6.73	-9.10	-7.77	-7.33
8	12.02	155.10	163.10	162.30	161.10	153.90	146.70	143.70
	-0.01	-52.43	-50.60	-48.81	-47.51	-44.88	-40.87	-35.58
	87.92	1.84	-3.40	-10.07	-14.57	-16.30	-13.38	-11.88
13	22.02	158.20	173.30	172.10	165.00	154.30	144.00	140.10
	-0.01	-66.85	-60.46	-56.12	-54.25	-53.06	-50.56	-45.33
	83.06	-38.56	-32.44	-33.00	-30.15	-26.59	-19.99	-15.53

PROPULSIVE WING FLOW FIELD

RAKE SUMMARY, RUN 232

PT	ALPHA / BETA / HEIGHT	VT1 / ALP1 / BET1	VT2 / ALP2 / BET2	VT3 / ALP3 / BET3	VT4 / ALP4 / BET4	VT5 / ALP5 / BET5	VT6 / ALP6 / BET6	VT7 / ALP7 / BET7
2	0.03	94.91	98.50	97.77	98.13	95.84	98.80	99.10
	-0.01	-26.64	-25.24	-27.56	-29.99	-33.02	-34.22	-33.59
	89.83	10.15	9.95	10.04	10.31	12.34	13.79	12.67
4	4.01	96.29	100.40	99.96	100.60	98.45	98.71	99.67
	-0.01	-32.87	-31.77	-35.00	-37.39	-40.54	-40.87	-37.90
	87.83	11.82	10.90	10.99	8.71	8.70	7.95	5.71
6	8.00	103.00	107.80	107.70	107.90	103.90	101.90	102.50
	-0.01	-41.78	-40.93	-43.95	-45.70	-47.39	-45.78	-40.60
	87.86	12.26	9.03	5.82	0.18	-3.00	-4.48	-4.48
8	12.00	108.90	114.80	114.80	114.50	108.50	103.90	104.80
	-0.01	-50.98	-50.07	-51.13	-50.52	-48.81	-47.19	-40.49
	88.79	8.22	2.47	-4.25	-11.00	-14.91	-13.23	-10.33
13	22.03	122.10	128.00	126.30	126.40	120.30	111.20	104.70
	-0.01	-73.42	-68.16	-65.92	-62.18	-58.90	-57.45	-50.81
	85.95	-12.40	-17.05	-24.07	-25.18	-23.59	-18.89	-18.02

PROPULSIVE WING FLOW FIELD

RAKE SUMMARY, RUN 233

PT	ALPHA BETA HEIGHT	VT1 ALP1 BET1	VT2 ALP2 BET2	VT3 ALP3 BET3	VT4 ALP4 BET4	VT5 ALP5 BET5	VT6 ALP6 BET6	VT7 ALP7 BET7
2	0.00	68.90	70.40	71.00	73.27	71.30	72.05	74.10
	-0.01	-28.22	-28.50	-31.70	-32.70	-35.00	-34.20	-35.50
	80.73	10.02	12.07	14.15	13.53	15.45	14.26	14.00
4	4.00	68.04	70.00	76.95	73.07	71.01	72.52	73.75
	-0.01	-32.17	-33.20	-37.00	-37.07	-40.00	-39.50	-40.00
	87.32	12.04	13.53	14.37	12.74	13.00	12.11	12.00
6	8.04	71.10	72.00	74.43	76.02	74.34	75.05	78.11
	-0.01	-38.50	-41.63	-44.54	-44.00	-47.04	-45.00	-44.00
	88.86	12.46	13.98	12.11	11.60	9.96	7.43	9.05
8	12.03	74.90	77.88	79.40	80.15	78.00	78.10	79.32
	-0.01	-49.46	-50.03	-53.00	-54.04	-56.53	-52.40	-49.90
	88.17	13.54	12.07	9.04	9.36	6.70	-1.36	-2.26
13	22.00	81.91	85.54	85.80	84.04	80.25	82.00	79.32
	-0.01	-79.76	-76.61	-70.10	-67.23	-65.24	-66.57	-56.04
	97.67	3.73	-3.23	-12.27	-16.17	-22.80	-20.51	-17.35

PROPULSIVE WING FLOW FIELD

RAKE SUMMARY, RUN 236

PT	ALPHA BETA HEIGHT	VT1 ALP1 BET1	VT2 ALP2 BET2	VT3 ALP3 BET3	VT4 ALP4 BET4	VT5 ALP5 BET5	VT6 ALP6 BET6	VT7 ALP7 BET7
21	0.00	154.10	154.20	156.30	138.00	111.00	130.00	146.70
	0.00	-14.40	-14.71	-12.75	-15.22	-13.22	-7.15	-6.82
	87.47	4.20	4.95	5.73	7.02	7.35	4.81	1.45
23	4.00	153.10	155.40	154.00	135.00	107.30	131.00	152.00
	0.00	-12.98	-12.97	-14.30	-17.45	-14.05	-6.30	-6.98
	88.15	5.96	4.00	6.17	6.23	3.45	2.12	-0.00
25	8.02	157.10	158.00	158.10	143.50	115.00	130.00	152.00
	0.00	-17.00	-17.50	-16.00	-21.53	-15.40	-13.54	-13.10
	88.01	7.00	6.00	7.10	6.01	1.04	-2.44	-3.54
27	12.05	157.00	160.50	154.10	138.00	110.00	131.00	154.00
	0.00	-20.02	-20.15	-22.67	-25.40	-20.40	-14.56	-14.70
	87.36	5.24	3.61	5.00	3.04	-1.53	-4.05	-4.00
29	22.00	71.11	91.22	97.50	88.04	127.40	107.00	158.00
	0.00	-36.73	-33.52	-31.00	-27.70	-20.34	-16.63	-14.02
	88.11	-34.17	-30.03	-37.24	-30.45	-15.07	-7.37	-5.81

PROPULSIVE WING FLOW FIELD

RAKE SUMMARY, RUN 236

PT	ALPHA BETA HEIGHT	VT1 ALP1 BET1	VT2 ALP2 BET2	VT3 ALP3 BET3	VT4 ALP4 BET4	VT5 ALP5 BET5	VT6 ALP6 BET6	VT7 ALP7 BET7
2	-0.01	138.50	140.10	140.80	141.20	137.40	138.50	138.10
	0.00	-23.33	-23.21	-24.43	-25.08	-27.18	-26.74	-26.03
	60.24	7.26	7.40	7.61	7.36	8.05	9.00	9.12
4	4.07	137.80	141.70	142.20	142.80	138.40	140.20	140.30
	0.00	-26.96	-26.87	-28.60	-29.13	-30.43	-29.85	-29.80
	66.07	7.04	7.83	7.34	6.48	7.41	8.40	7.87
6	8.00	138.10	143.20	143.80	144.10	138.00	140.40	141.90
	0.00	-30.86	-30.82	-31.53	-32.22	-33.44	-32.88	-32.22
	67.01	6.06	7.60	6.22	4.85	5.21	6.23	5.84
8	12.01	141.10	145.80	145.50	145.80	140.20	140.20	145.80
	0.00	-34.00	-34.13	-34.46	-34.76	-35.40	-35.00	-34.06
	68.00	6.07	5.44	3.02	1.84	1.50	2.47	2.18
13	22.10	151.40	156.50	156.10	155.40	145.30	150.00	157.50
	0.00	-46.83	-43.58	-40.82	-37.15	-36.86	-41.42	-39.41
	90.00	2.63	0.38	-2.41	-6.07	-12.90	-15.92	-10.20

PROPULSIVE WING FLOW FIELD

RAKE SUMMARY, RUN 237

PT	ALPHA BETA HEIGHT	VT1 ALP1 BET1	VT2 ALP2 BET2	VT3 ALP3 BET3	VT4 ALP4 BET4	VT5 ALP5 BET5	VT6 ALP6 BET6	VT7 ALP7 BET7
3	0.00	97.44	99.50	100.20	101.00	99.35	101.10	99.37
	0.00	-26.25	-26.37	-27.08	-28.12	-31.43	-30.08	-32.05
	60.38	8.45	8.31	8.50	7.71	8.98	10.37	10.52
5	3.00	97.04	100.40	100.40	101.70	98.50	100.00	102.30
	0.00	-30.10	-29.84	-31.20	-32.04	-34.05	-34.24	-33.32
	67.38	9.07	8.00	7.07	6.25	8.23	8.40	8.00
7	8.00	98.57	102.00	102.10	103.50	100.00	101.00	105.50
	0.00	-34.56	-33.86	-34.85	-36.30	-38.26	-37.48	-35.12
	68.26	10.49	7.36	6.78	4.23	6.10	6.15	5.25
9	11.98	102.40	106.00	104.90	106.30	102.00	103.90	108.00
	0.00	-38.16	-37.95	-38.20	-38.10	-40.04	-38.57	-37.30
	68.50	8.80	5.52	4.47	1.74	3.16	3.12	2.36
14	22.01	108.90	113.20	111.70	112.10	110.20	110.00	114.80
	0.00	-51.16	-48.58	-47.40	-46.18	-43.98	-40.98	-39.88
	90.06	5.05	1.40	-0.07	-3.05	-3.42	-7.07	-11.86

PROPULSIVE WING FLOW FIELD

RAKE SUMMARY, RUN 230

PT	ALPHA BETA WEIGHT	VT1 ALP1 BET1	VT2 ALP2 BET2	VT3 ALP3 BET3	VT4 ALP4 BET4	VT5 ALP5 BET5	VT6 ALP6 BET6	VT7 ALP7 BET7
2	-0.01	72.00	72.06	70.05	72.00	71.01	72.47	87.20
	0.00	-28.05	-27.04	-27.00	-32.01	-36.34	-38.08	-24.92
	80.70	12.10	5.96	7.46	3.21	10.90	9.24	4.92
4	4.00	73.44	73.30	72.33	74.03	72.04	73.20	87.06
	0.00	-32.70	-32.40	-32.25	-36.95	-38.35	-40.30	-26.92
	87.81	12.05	6.00	7.36	2.74	8.30	7.02	3.93
6	8.01	74.42	74.70	73.00	75.06	74.00	74.45	88.90
	0.00	-37.40	-36.02	-36.05	-41.06	-43.15	-43.20	-32.28
	80.75	12.01	6.26	6.00	1.27	7.73	5.41	2.90
8	12.00	75.30	76.20	75.12	77.03	74.03	75.40	90.06
	0.00	-43.11	-41.75	-41.15	-44.06	-46.77	-46.15	-35.73
	80.63	11.34	3.00	3.06	-1.40	4.36	2.01	1.92
13	21.90	80.04	82.04	80.21	82.03	79.07	80.72	90.35
	0.00	-56.16	-53.20	-52.43	-53.57	-54.73	-52.50	-42.94
	90.02	9.46	1.51	-0.34	-5.63	-1.33	-2.14	-2.53

PROPULSIVE WING FLOW FIELD

RAKE SUMMARY, RUN 230

PT	ALPHA BETA WEIGHT	VT1 ALP1 BET1	VT2 ALP2 BET2	VT3 ALP3 BET3	VT4 ALP4 BET4	VT5 ALP5 BET5	VT6 ALP6 BET6	VT7 ALP7 BET7
2	-0.01	53.11	51.35	48.10	51.00	36.08	50.80	80.02
	0.00	-22.20	-30.36	-25.73	-36.34	-38.22	-43.56	-21.08
	80.70	17.36	3.87	6.82	-2.34	13.04	8.30	2.92
4	4.00	53.82	52.02	48.57	52.42	52.47	52.81	70.33
	0.00	-25.74	-35.75	-34.54	-41.54	-45.00	-48.90	-26.05
	80.32	16.03	5.01	7.31	-1.40	12.54	7.26	2.33
6	8.00	55.15	53.22	50.00	54.03	53.77	54.06	70.16
	0.00	-40.57	-40.05	-38.90	-45.04	-46.00	-50.15	-31.90
	80.05	16.52	5.20	7.07	-2.57	9.05	5.13	1.05
8	12.00	56.16	54.95	52.00	56.06	54.02	55.25	71.91
	0.00	-47.20	-45.10	-44.51	-50.17	-53.00	-54.30	-35.00
	85.90	15.63	3.00	3.07	-4.50	6.37	1.04	0.33
13	21.90	61.06	60.73	58.06	62.75	60.50	60.77	75.30
	0.00	-58.05	-57.42	-56.31	-56.06	-61.50	-60.02	-45.34
	90.00	13.73	2.43	1.47	-8.56	0.00	-2.07	-1.30

PROPULSIVE WING FLOW FIELD

RAKE SUMMARY, RUN 240

PT	ALPHA BETA HEIGHT	VT1 ALP1 BET1	VT2 ALP2 BET2	VT3 ALP3 BET3	VT4 ALP4 BET4	VT5 ALP5 BET5	VT6 ALP6 BET6	VT7 ALP7 BET7
2	-6.02	40.06	37.20	33.16	37.00	37.47	37.46	56.00
	0.00	-34.79	-35.22	-31.52	-42.06	-44.26	-53.26	-16.07
	60.00	20.05	0.53	5.05	-0.44	12.02	0.03	1.77
4	4.01	40.51	36.16	34.11	38.20	38.06	38.77	56.70
	0.00	-30.10	-35.35	-36.44	-44.05	-46.77	-46.07	-35.25
	60.00	20.79	2.60	5.43	-5.07	10.70	4.05	1.07
6	8.00	41.20	37.00	36.13	40.02	40.02	38.01	57.06
	0.00	-43.35	-46.07	-49.27	-49.16	-50.00	-57.36	-35.72
	60.07	21.21	3.60	4.27	-6.44	16.27	4.16	0.00
8	11.00	42.24	38.04	38.17	42.72	41.00	41.00	57.03
	0.00	-48.13	-52.00	-56.13	-54.71	-56.02	-61.47	-36.04
	65.00	19.01	3.36	3.51	-6.50	0.06	-0.47	-0.00
13	21.00	44.71	43.27	41.70	46.01	44.03	44.41	00.10
	0.00	-61.54	-64.11	-60.73	-63.04	-70.01	-66.74	-49.23
	60.14	16.05	2.02	3.26	-7.00	0.36	-1.07	-0.50

PROPULSIVE WING FLOW FIELD

RAKE SUMMARY, RUN 243

PT	ALPHA BETA HEIGHT	VT1 ALP1 BET1	VT2 ALP2 BET2	VT3 ALP3 BET3	VT4 ALP4 BET4	VT5 ALP5 BET5	VT6 ALP6 BET6	VT7 ALP7 BET7
3	0.01	158.40	157.00	157.50	141.00	140.00	135.50	130.00
	0.00	-10.17	-20.02	-16.50	-17.43	-13.70	-7.20	-7.27
	60.00	4.50	3.30	0.41	0.70	-0.41	2.00	1.00
5	4.02	160.40	160.00	154.70	130.00	163.70	130.00	145.20
	0.00	-20.20	-21.00	-16.03	-16.33	-13.00	-0.11	-0.07
	60.03	-7.00	-0.47	-4.16	-2.30	-3.36	0.77	-0.40
7	7.00	165.00	164.50	160.50	140.00	133.70	137.10	140.40
	0.00	-25.03	-24.01	-23.20	-23.00	-23.20	-14.00	-13.50
	64.07	-12.00	-6.03	-4.07	-4.34	-3.01	-2.70	-2.00
9	12.01	166.00	153.00	147.00	134.30	140.40	137.70	140.40
	0.00	-23.05	-22.30	-22.07	-23.71	-17.40	-13.77	-13.26
	63.07	-10.46	-6.16	-5.46	-7.20	-6.60	-2.22	-2.24
14	21.03	157.50	157.00	153.30	130.40	110.00	143.00	140.00
	0.00	-36.15	-36.00	-36.04	-36.11	-20.01	-21.11	-19.20
	64.43	-17.34	-16.16	-16.06	-16.04	-12.01	-3.50	-3.15

PROPULSIVE WING FLOW FIELD

RAKE SUMMARY, RUN 244

PT	ALPHA BETA HEIGHT	VT1 ALP1 BET1	VT2 ALP2 BET2	VT3 ALP3 BET3	VT4 ALP4 BET4	VT5 ALP5 BET5	VT6 ALP6 BET6	VT7 ALP7 BET7
2	0.00	121.00	124.50	127.00	127.70	122.00	120.20	122.00
	0.00	-24.20	-25.34	-26.00	-26.11	-25.05	-26.56	-26.05
	60.27	0.04	0.07	0.23	7.00	0.05	7.15	0.04
4	4.02	130.20	144.00	150.70	148.70	142.20	130.20	133.50
	0.00	-22.04	-24.00	-26.00	-26.70	-46.57	-36.04	-34.00
	60.14	11.02	12.72	0.02	5.07	-0.36	-3.07	-5.10
6	8.02	140.20	155.00	160.20	160.40	150.50	146.10	141.50
	0.00	-43.02	-47.07	-52.20	-56.74	-45.00	-36.06	-34.00
	60.12	17.31	15.50	6.71	-6.47	-15.53	-15.44	-15.67
8	11.00	150.50	158.00	162.00	167.00	161.20	148.00	141.10
	0.50	-50.12	-54.04	-60.26	-53.11	-47.50	-42.55	-38.13
	64.75	10.50	3.00	-14.24	-20.53	-22.46	-16.73	-16.51
12	22.01	160.20	163.10	175.00	163.20	151.70	143.00	141.00
	0.00	-61.11	-57.90	-63.04	-52.74	-51.33	-48.12	-43.31
	83.47	-30.04	-22.71	-31.31	-27.62	-24.34	-16.06	-13.31

PROPULSIVE WING FLOW FIELD

RAKE SUMMARY, RUN 245

PT	ALPHA BETA HEIGHT	VT1 ALP1 BET1	VT2 ALP2 BET2	VT3 ALP3 BET3	VT4 ALP4 BET4	VT5 ALP5 BET5	VT6 ALP6 BET6	VT7 ALP7 BET7
3	0.00	95.01	96.20	96.04	96.70	96.02	96.30	101.00
	0.00	-26.10	-25.70	-26.75	-25.70	-31.10	-31.17	-30.00
	65.00	0.10	0.70	0.13	0.30	11.07	11.12	10.22
5	4.01	98.15	101.00	101.00	101.00	99.50	99.00	102.50
	0.00	-33.20	-32.75	-34.73	-27.00	-32.02	-35.01	-34.00
	65.04	11.21	0.00	0.44	6.06	7.33	5.23	3.17
7	8.02	108.70	114.20	115.20	116.20	105.00	107.00	111.10
	0.00	-42.27	-42.22	-45.76	-46.79	-46.07	-46.55	-36.06
	65.35	15.00	12.25	0.74	0.77	-4.04	-6.04	-6.30
9	12.00	114.40	115.00	118.00	121.00	110.00	115.10	112.10
	0.00	-55.42	-60.20	-56.75	-55.25	-54.00	-45.04	-38.51
	82.32	16.06	6.63	-6.72	-17.14	-10.07	-17.41	-16.36
14	22.03	108.00	115.00	121.20	120.70	122.10	115.00	112.00
	0.00	-66.77	-71.40	-65.02	-61.02	-56.05	-55.40	-46.00
	96.51	-22.00	-30.36	-31.07	-31.00	-27.04	-22.04	-16.77

PROPULSIVE WING FLOW FIELD

RAKE SUMMARY, RUN 246

PT	ALPHA BETA HEIGHT	VT1 ALP1 BET1	VT2 ALP2 BET2	VT3 ALP3 BET3	VT4 ALP4 BET4	VT5 ALP5 BET5	VT6 ALP6 BET6	VT7 ALP7 BET7
2	0.01	68.82	72.48	71.48	71.43	70.98	71.75	79.15
	0.00	-29.88	-27.22	-26.86	-33.02	-34.77	-35.58	-29.76
	60.02	12.87	9.46	11.09	8.25	14.90	14.04	10.90
4	4.00	70.06	73.48	73.12	73.47	73.24	73.72	70.91
	0.00	-34.52	-32.90	-34.18	-38.70	-40.06	-40.63	-34.95
	60.40	13.48	9.02	10.73	7.47	12.90	11.14	7.70
6	5.00	74.01	76.79	76.42	77.26	76.73	77.58	85.07
	0.00	-42.26	-40.08	-42.95	-46.85	-47.01	-46.97	-38.91
	64.01	15.21	11.00	11.76	8.82	8.10	5.04	1.06
8	11.90	80.64	84.14	84.63	85.22	83.12	82.91	87.23
	0.00	-48.90	-48.14	-52.06	-55.37	-56.26	-53.16	-43.71
	66.43	16.20	12.08	10.20	2.47	-0.05	-5.06	-5.90
13	22.00	73.90	71.67	77.67	80.26	83.55	81.04	80.56
	0.00	-66.74	-61.63	-73.40	-66.81	-63.62	-60.02	-51.60
	67.57	21.00	-10.70	-22.82	-34.04	-26.46	-22.76	-10.64

PROPULSIVE WING FLOW FIELD

RAKE SUMMARY, RUN 247

PT	ALPHA BETA HEIGHT	VT1 ALP1 BET1	VT2 ALP2 BET2	VT3 ALP3 BET3	VT4 ALP4 BET4	VT5 ALP5 BET5	VT6 ALP6 BET6	VT7 ALP7 BET7
2	0.01	49.15	51.00	49.58	48.50	50.30	50.21	58.01
	0.00	-35.42	-36.25	-31.00	-35.87	-38.14	-41.28	-39.82
	60.44	18.13	9.76	11.05	7.53	16.05	15.00	10.05
4	4.01	50.82	52.05	51.24	51.22	52.50	53.04	60.05
	0.00	-38.17	-34.33	-35.47	-42.57	-42.41	-44.76	-34.86
	67.82	18.50	14.72	13.02	7.95	17.82	14.75	8.04
6	7.99	53.39	53.04	53.83	53.82	54.04	54.30	63.06
	0.00	-43.14	-44.05	-42.50	-48.83	-48.57	-48.72	-38.50
	67.09	17.81	11.36	13.31	8.15	16.06	12.43	7.07
8	11.90	62.23	62.41	66.27	66.25	66.16	66.20	67.36
	0.00	-45.26	-43.71	-45.52	-51.16	-51.06	-52.10	-43.01
	66.57	18.51	12.67	12.05	8.17	13.13	7.47	3.16
13	22.00	67.44	68.46	67.91	66.95	67.63	68.60	70.07
	0.00	-67.17	-64.78	-68.15	-71.71	-71.53	-68.80	-56.60
	66.57	20.24	11.37	7.47	-3.36	-2.06	-7.04	-7.36

PROPULSIVE WING FLOW FIELD

WAKE SUMMARY, RUN 248

PT	ALPHA BETA HEIGHT	VT1 ALP1 BET1	VT2 ALP2 BET2	VT3 ALP3 BET3	VT4 ALP4 BET4	VT5 ALP5 BET5	VT6 ALP6 BET6	VT7 ALP7 BET7
2	0.00	35.74	37.23	33.00	35.25	36.02	36.81	42.54
	0.00	-38.71	-29.40	-22.31	-47.46	-42.17	-45.40	-31.16
	88.51	22.24	8.37	10.00	-0.06	22.37	10.88	8.72
4	3.00	37.46	38.26	37.63	37.34	37.00	37.00	43.04
	0.00	-42.53	-38.38	-37.82	-47.02	-47.90	-51.75	-35.35
	87.44	24.16	11.30	12.81	5.16	23.88	16.51	9.91
6	6.00	37.87	38.3w	37.72	36.27	36.25	36.00	45.72
	0.00	-46.40	-40.41	-42.58	-54.76	-52.04	-56.63	-36.71
	87.22	24.54	12.15	13.45	6.70	24.37	14.46	8.87
8	11.00	40.13	41.00	40.00	41.50	43.00	43.00	48.10
	0.00	-51.00	-46.48	-48.45	-57.88	-55.75	-58.00	-45.51
	87.33	24.00	12.30	14.23	6.71	16.01	11.04	8.91
13	21.00	49.48	48.00	48.52	48.05	50.07	50.22	53.00
	0.00	-61.20	-60.63	-61.10	-68.53	-68.01	-68.37	-58.00
	88.00	23.17	17.07	14.75	10.08	15.35	8.14	4.48

PROPULSIVE WING FLOW FIELD

WAKE SUMMARY, RUN 250

PT	ALPHA BETA HEIGHT	VT1 ALP1 BET1	VT2 ALP2 BET2	VT3 ALP3 BET3	VT4 ALP4 BET4	VT5 ALP5 BET5	VT6 ALP6 BET6	VT7 ALP7 BET7
3	0.03	153.10	157.10	157.70	150.10	120.00	150.10	157.10
	0.00	-10.15	-9.06	-9.22	-10.22	-10.24	-7.56	-6.63
	88.20	5.57	5.15	6.23	6.20	4.06	-0.42	0.02
5	4.05	153.40	158.1w	156.00	153.70	136.00	156.20	158.00
	0.00	-11.06	-10.05	-11.46	-13.20	-10.27	-9.10	-6.22
	87.50	6.44	5.53	6.00	6.75	-1.22	-1.03	-1.30
7	8.00	154.70	158.00	156.00	149.00	144.00	155.70	157.30
	0.00	-13.61	-13.72	-14.16	-16.22	-12.00	-11.01	-10.01
	87.44	6.58	5.83	6.94	5.70	-4.01	-3.36	-2.72
9	12.00	156.10	160.00	149.00	123.00	153.70	158.00	158.00
	0.00	-16.02	-16.46	-16.41	-16.05	-13.32	-12.21	-11.57
	87.35	5.05	4.50	6.04	-2.07	-6.37	-4.21	-3.47
14	22.00	85.32	146.00	115.00	142.00	161.00	160.50	157.50
	0.00	-30.31	-27.23	-23.37	-18.37	-18.31	-13.21	-12.45
	88.11	-31.00	-22.55	-20.35	-17.05	-10.05	-8.34	-7.06

PROPULSIVE WING FLOW FIELD

RAKE SUMMARY, RUN 297

PT	ALPHA BETA HEIGHT	VT1 ALP1 BET1	VT2 ALP2 BET2	VT3 ALP3 BET3	VT4 ALP4 BET4	VT5 ALP5 BET5	VT6 ALP6 BET6	VT7 ALP7 BET7
2	-0.04	122.10	120.00	120.30	120.20	153.20	370.40	210.40
	0.00	-18.02	-17.01	-17.21	-16.40	-15.72	-16.22	-22.04
	87.40	8.00	7.34	7.73	7.06	8.30	5.33	1.01
4	4.03	133.00	130.10	127.20	126.20	141.00	305.40	122.20
	0.00	-21.17	-20.10	-20.46	-21.73	-18.07	-20.25	-24.07
	87.00	7.46	7.57	7.04	7.00	7.58	5.01	-1.10
6	8.01	134.10	128.50	128.20	127.00	172.40	304.00	171.10
	0.00	-24.35	-23.29	-23.47	-24.87	-21.30	-24.15	-26.72
	87.43	7.71	7.20	7.03	6.83	6.50	[illegible]	-3.61
8	12.02	135.50	140.70	130.10	137.00	100.70	304.70	147.00
	0.00	-27.00	-26.03	-26.50	-27.00	-23.10	-26.01	-26.25
	88.37	8.60	5.52	4.43	3.42	4.20	3.40	-5.77
12	22.03	140.00	143.00	141.10	137.30	214.00	340.00	125.20
	0.00	-33.30	-29.13	-30.08	-34.37	-30.00	-37.20	-29.10
	88.23	1.26	-3.58	-6.77	-11.46	-1.30	1.22	-7.07

PROPULSIVE WING FLOW FIELD

RAKE SUMMARY, RUN 296

PT	ALPHA BETA HEIGHT	VT1 ALP1 BET1	VT2 ALP2 BET2	VT3 ALP3 BET3	VT4 ALP4 BET4	VT5 ALP5 BET5	VT6 ALP6 BET6	VT7 ALP7 BET7
2	-0.02	93.00	90.40	90.42	90.06	103.00	300.70	207.00
	0.00	-20.04	-18.53	-18.42	-21.50	-18.52	-18.21	-24.20
	88.10	7.47	7.30	7.06	6.15	8.30	5.72	3.00
4	4.02	93.34	90.42	90.50	90.03	108.30	315.20	203.00
	0.00	-24.46	-23.24	-23.20	-25.15	-22.25	-20.10	-27.01
	88.36	8.10	7.04	7.06	7.70	5.63	5.73	2.07
6	8.03	94.50	90.70	97.00	90.57	113.20	327.00	227.40
	0.00	-28.04	-26.30	-26.37	-28.30	-25.05	-23.95	-31.20
	87.17	8.30	7.22	6.00	6.46	7.30	5.14	1.32
8	12.02	95.05	100.10	95.50	97.03	122.00	343.10	226.70
	0.00	-32.11	-30.05	-29.43	-31.12	-29.04	-27.00	-34.00
	88.23	7.46	5.57	4.47	3.23	4.33	4.20	1.01
14	22.07	101.20	105.40	101.50	100.20	122.00	345.50	105.10
	0.00	-41.00	-38.50	-32.57	-34.02	-33.70	-37.11	-43.30
	90.01	3.46	0.44	-3.80	-11.10	-6.27	2.00	-2.06

PROPULSIVE WING FLOW FIELD

BASE SUMMARY, RUN 200

PT	ALPHA BETA HEIGHT	VT1 ALP1 BET1	VT2 ALP2 BET2	VT3 ALP3 BET3	VT4 ALP4 BET4	VT5 ALP5 BET5	VT6 ALP6 BET6	VT7 ALP7 BET7
3	-0.01	84.47	88.41	87.30	88.75	72.02	242.40	207.80
	0.00	-25.57	-22.06	-22.01	-25.13	-23.38	-16.57	-24.44
	87.88	8.87	7.16	7.82	7.72	8.83	9.50	3.00
4	4.02	88.84	86.02	87.87	87.31	74.84	250.50	200.30
	0.00	-26.83	-26.25	-26.16	-26.22	-26.38	-20.55	-20.37
	88.38	8.87	7.61	8.06	7.10	8.33	8.77	3.00
6	8.06	86.32	76.22	88.11	88.51	76.21	261.20	203.20
	0.00	-33.10	-28.86	-28.50	-32.83	-28.31	-24.25	-22.25
	88.84	10.02	7.34	7.66	8.18	8.50	8.33	3.35
8	12.02	87.48	78.05	78.38	88.82	80.02	278.10	275.20
	0.00	-37.87	-34.88	-33.43	-38.83	-32.10	-28.60	-38.10
	87.38	9.06	8.74	8.13	3.54	4.87	4.88	3.15
13	22.02	73.38	77.87	78.58	78.50	96.81	294.30	248.10
	0.00	-47.24	-42.51	-38.38	-38.11	-38.12	-37.40	-45.43
	88.88	8.37	1.06	-0.08	-8.11	-8.61	2.85	2.00

PROPULSIVE WING FLOW FIELD

BASE SUMMARY, RUN 202

PT	ALPHA BETA HEIGHT	VT1 ALP1 BET1	VT2 ALP2 BET2	VT3 ALP3 BET3	VT4 ALP4 BET4	VT5 ALP5 BET5	VT6 ALP6 BET6	VT7 ALP7 BET7
3	-0.02	156.70	162.00	161.00	150.30	122.00	190.70	161.20
	0.00	-10.44	-17.00	-14.81	-13.00	-11.20	-7.04	-6.44
	88.03	5.81	1.03	-0.08	-1.37	-2.02	-0.54	0.07
5	4.02	161.20	165.00	150.00	153.20	133.00	190.00	161.10
	0.00	-24.25	-18.38	-15.18	-14.40	-12.95	-10.27	-6.07
	88.07	-6.57	-4.24	-3.41	-3.43	-4.20	-1.05	-1.22
7	8.06	150.50	161.70	150.50	140.00	128.50	190.40	161.10
	0.00	-31.34	-18.51	-16.00	-14.61	-12.07	-11.07	-10.08
	88.03	-7.17	-3.80	-2.16	-4.88	-4.88	-2.77	-2.06
9	12.07	150.10	161.40	150.50	125.50	150.50	190.50	190.20
	0.00	-21.20	-18.27	-17.06	-15.88	-14.08	-13.00	-12.00
	87.00	-6.02	-4.14	-3.04	-5.05	-6.76	-3.02	-2.04
14	22.08	147.00	140.00	120.00	127.70	150.00	190.00	190.70
	0.00	-28.73	-20.88	-24.55	-22.51	-20.06	-17.30	-17.27
	85.12	-12.48	-11.70	-12.00	-13.42	-6.24	-4.05	-4.10

PROPULSIVE WING FLOW FIELD

RAKE SUMMARY, RUN 263

PT	ALPHA BETA HEIGHT	VT1 ALP1 BET1	VT2 ALP2 BET2	VT3 ALP3 BET3	VT4 ALP4 BET4	VT5 ALP5 BET5	VT6 ALP6 BET6	VT7 ALP7 BET7
2	0.01	134.30	140.80	141.20	140.50	145.00	375.30	218.40
	0.00	-23.20	-23.00	-24.58	-24.78	-20.25	-16.38	-18.14
	87.36	10.38	0.00	0.00	1.76	1.11	1.04	-0.00
4	4.00	157.00	161.30	150.10	143.00	152.00	383.20	200.10
	0.00	-33.37	-34.48	-32.87	-26.23	-22.54	-20.68	-23.28
	87.80	11.75	3.00	-6.30	-8.00	-8.75	0.68	-2.21
6	8.03	163.00	168.10	152.30	145.00	160.40	381.70	186.70
	0.00	-46.00	-38.20	-31.62	-28.06	-24.05	-33.07	-26.08
	88.98	-4.47	-13.26	-15.78	-14.21	-0.34	0.10	-3.62
8	12.06	166.40	168.70	150.40	143.00	168.30	374.10	178.00
	0.00	-41.00	-35.06	-32.36	-30.40	-26.23	-27.06	-28.56
	88.33	-20.77	-17.30	-18.27	-16.48	-10.01	-0.25	-3.47
13	22.05	150.00	158.00	147.20	141.80	166.20	381.00	157.00
	0.00	-42.50	-41.38	-39.00	-38.48	-33.53	-35.24	-35.31
	94.85	-20.76	-18.06	-17.40	-15.43	-0.24	-0.41	-4.50

PROPULSIVE WING FLOW FIELD

RAKE SUMMARY, RUN 264

PT	ALPHA BETA HEIGHT	VT1 ALP1 BET1	VT2 ALP2 BET2	VT3 ALP3 BET3	VT4 ALP4 BET4	VT5 ALP5 BET5	VT6 ALP6 BET6	VT7 ALP7 BET7
2	0.02	96.02	101.00	102.50	103.30	108.00	317.00	246.20
	0.00	-24.42	-22.73	-23.07	-26.05	-22.56	-16.30	-21.00
	87.00	11.73	10.02	10.07	5.00	4.00	2.07	-0.31
4	4.02	104.00	112.70	110.50	105.40	108.30	318.00	230.10
	0.00	-34.07	-32.00	-34.37	-33.76	-27.30	-20.13	-25.73
	88.81	14.02	0.50	3.33	-5.26	-5.50	0.40	-0.37
6	8.01	122.00	123.40	112.20	100.60	113.10	328.00	231.00
	0.00	-46.25	-43.08	-37.74	-33.60	-28.15	-23.88	-30.30
	88.94	7.74	-5.00	-14.15	-14.03	-11.18	-0.01	-0.08
9	11.98	124.00	126.00	115.00	106.40	116.00	334.60	220.00
	0.00	-48.41	-41.06	-38.81	-34.74	-28.01	-27.40	-34.43
	88.64	-16.04	-16.46	-18.30	-10.92	-13.01	-0.20	-1.00
14	22.04	120.00	125.00	112.00	106.10	124.20	330.30	194.70
	0.00	-47.93	-45.22	-42.11	-41.63	-36.13	-36.23	-42.35
	97.24	-23.68	-22.11	-25.03	-23.38	-13.96	-0.81	-1.75

PROPULSIVE WING FLOW FIELD

RAKE SUMMARY, RUN 265

PT	ALPHA BETA HEIGHT	VT1 ALP1 BET1	VT2 ALP2 BET2	VT3 ALP3 BET3	VT4 ALP4 BET4	VT5 ALP5 BET5	VT6 ALP6 BET6	VT7 ALP7 BET7
2	0.01	87.03	72.44	72.86	74.76	86.79	277.10	268.20
	0.00	-27.53	-22.42	-22.40	-27.65	-22.56	-16.37	-23.36
	87.26	14.21	9.45	11.46	9.30	8.86	2.68	0.62
4	4.01	74.43	81.86	82.33	81.72	83.17	271.30	260.60
	0.00	-34.14	-30.36	-31.86	-35.76	-31.15	-20.30	-26.96
	87.16	18.21	12.20	10.77	3.74	-0.14	1.16	-0.84
6	8.06	86.86	89.23	84.70	82.34	84.25	274.30	255.60
	0.00	-43.70	-42.37	-42.81	-46.74	-34.11	-24.30	-30.05
	87.68	17.70	7.93	-1.96	-12.44	-10.73	-0.12	-0.81
8	12.07	93.00	94.51	88.94	86.30	84.48	284.10	256.50
	0.00	-56.16	-48.20	-42.38	-40.75	-35.38	-27.73	-35.20
	88.07	3.75	-0.88	-15.83	-18.84	-16.10	-0.41	-0.76
13	22.01	96.17	98.48	86.43	81.86	88.37	285.00	230.16
	0.00	-57.48	-50.75	-46.01	-45.13	-41.01	-37.01	-44.74
	88.46	-27.73	-23.61	-20.11	-31.32	-20.30	-1.13	-0.85

PROPULSIVE WING FLOW FIELD

RAKE SUMMARY, RUN 273

PT	ALPHA BETA HEIGHT	VT1 ALP1 BET1	VT2 ALP2 BET2	VT3 ALP3 BET3	VT4 ALP4 BET4	VT5 ALP5 BET5	VT6 ALP6 BET6	VT7 ALP7 BET7
3	0.01	157.20	160.00	157.00	148.30	118.40	87.51	123.10
	0.00	-14.63	-14.75	-16.05	-20.04	-25.00	-18.25	-5.00
	88.78	5.10	5.52	5.78	7.02	10.18	7.07	4.44
5	3.00	156.00	160.00	152.30	136.10	102.90	91.27	126.20
	0.00	-17.00	-17.10	-18.00	-24.63	-27.00	-14.91	-7.72
	89.00	5.68	5.81	5.43	7.43	9.15	8.72	3.72
7	6.02	154.50	156.10	145.40	123.70	93.15	94.04	130.20
	0.00	-17.07	-18.24	-22.36	-26.06	-20.05	-14.56	-9.95
	88.20	5.91	4.46	5.41	7.71	5.66	3.07	1.10
8	12.01	156.20	155.00	136.50	103.00	79.00	100.50	137.00
	0.00	-20.11	-20.42	-25.50	-32.37	-24.50	-10.86	-10.06
	88.06	4.13	2.08	1.04	-1.57	-1.07	1.03	-1.05
11	21.07	83.00	77.07	80.98	77.06	95.30	169.30	167.50
	0.00	-41.81	-37.04	-35.30	-26.76	-11.44	-11.06	-13.54
	87.81	-47.81	-44.90	-45.71	-42.54	-22.30	-7.81	-4.00

PROPULSIVE WING FLOW FIELD

RAKE SUMMARY, RUN 274

PT	ALPHA BETA HEIGHT	VT1 ALP1 BET1	VT2 ALP2 BET2	VT3 ALP3 BET3	VT4 ALP4 BET4	VT5 ALP5 BET5	VT6 ALP6 BET6	VT7 ALP7 BET7
2	-0.01	91.95	94.88	94.68	92.81	85.91	80.02	87.17
	0.00	-20.73	-18.43	-20.51	-23.28	-23.52	-23.55	-17.72
	91.51	11.22	12.02	14.05	18.81	20.18	20.52	16.13
4	4.00	92.92	96.10	95.05	93.29	84.06	80.88	80.74
	0.00	-24.01	-22.74	-23.57	-26.30	-27.82	-26.48	-20.07
	88.20	12.75	13.16	15.06	17.61	19.44	18.27	15.77
6	8.03	94.57	97.41	96.60	94.44	85.98	84.13	82.14
	0.00	-27.61	-26.34	-27.53	-29.98	-30.04	-27.68	-21.73
	86.42	13.05	13.11	15.42	17.43	19.04	19.15	14.85
7	12.00	97.66	100.40	99.02	97.59	92.53	86.41	86.46
	0.00	-33.70	-32.13	-32.35	-33.50	-33.04	-31.30	-24.68
	89.11	10.12	9.03	9.14	8.71	12.01	15.70	14.41
10	22.00	89.15	79.58	65.62	51.50	35.86	33.84	62.36
	0.00	-64.73	-65.70	-68.63	-71.05	-66.83	-53.20	-20.61
	86.73	11.00	8.70	-0.22	-12.81	-14.58	-8.24	2.51

PROPULSIVE WING FLOW FIELD

RAKE SUMMARY, RUN 275

PT	ALPHA BETA HEIGHT	VT1 ALP1 BET1	VT2 ALP2 BET2	VT3 ALP3 BET3	VT4 ALP4 BET4	VT5 ALP5 BET5	VT6 ALP6 BET6	VT7 ALP7 BET7
2	0.02	85.20	87.73	86.60	86.06	82.20	57.72	67.05
	0.00	-22.75	-20.63	-21.52	-25.13	-24.07	-25.76	-17.05
	88.72	12.09	11.76	14.78	18.00	20.06	21.47	15.67
4	3.98	86.22	88.48	87.17	86.46	82.25	57.43	88.54
	0.00	-25.94	-24.45	-25.44	-28.71	-28.52	-30.75	-20.93
	89.66	14.22	13.06	16.20	17.74	22.16	20.02	14.86
6	8.00	85.81	88.90	88.91	87.40	82.81	58.04	71.00
	0.00	-30.28	-27.96	-28.86	-31.93	-31.23	-31.74	-23.70
	87.18	14.40	12.87	15.28	17.18	21.72	21.01	14.87
7	12.00	88.50	72.28	71.51	70.45	66.13	62.91	85.81
	0.00	-36.62	-34.50	-35.63	-38.75	-39.16	-40.94	-30.77
	88.98	13.56	11.60	12.82	12.17	14.55	13.08	9.98
10	22.01	67.35	61.90	50.95	41.83	28.72	23.93	57.17
	0.00	-63.71	-62.48	-68.58	-75.32	-75.17	-67.83	-26.71
	98.06	12.91	6.70	4.76	-7.43	-5.76	-4.13	0.10

PROPULSIVE WING FLOW FIELD

RAKE SUMMARY, RUN 276

PT	ALPHA BETA HEIGHT	VT1 ALP1 BET1	VT2 ALP2 BET2	VT3 ALP3 BET3	VT4 ALP4 BET4	VT5 ALP5 BET5	VT6 ALP6 BET6	VT7 ALP7 BET7
2	0.00	44.90	47.47	45.84	44.78	42.90	39.35	48.97
	0.00	-25.51	-20.79	-22.40	-27.38	-26.67	-31.52	-19.83
	88.13	14.85	11.18	15.30	15.65	22.70	20.59	12.76
4	4.02	45.88	47.89	46.85	46.11	44.42	40.83	50.42
	0.00	-28.57	-25.26	-27.02	-32.34	-29.73	-34.84	-23.26
	87.76	15.85	12.79	16.48	17.63	22.94	21.45	13.34
6	8.02	47.15	49.21	48.29	47.20	45.58	41.59	51.53
	0.00	-33.15	-29.48	-30.30	-35.71	-33.94	-38.04	-26.30
	85.00	16.09	12.73	15.37	18.38	21.04	19.25	12.46
7	11.99	48.26	51.44	49.96	48.87	46.80	41.38	48.88
	0.00	-38.52	-33.97	-37.29	-42.49	-42.15	-47.82	-31.39
	87.34	17.00	12.44	16.22	15.14	18.87	14.00	7.49
10	21.98	51.24	48.85	41.91	37.76	29.11	23.74	41.57
	0.00	-81.46	-81.49	-87.33	-74.37	-71.21	-73.76	-33.05
	98.96	18.15	9.40	10.44	-4.98	-2.81	-8.87	6.67

PROPULSIVE WING FLOW FIELD

RAKE SUMMARY, RUN 277

PT	ALPHA BETA HEIGHT	VT1 ALP1 BET1	VT2 ALP2 BET2	VT3 ALP3 BET3	VT4 ALP4 BET4	VT5 ALP5 BET5	VT6 ALP6 BET6	VT7 ALP7 BET7
2	-0.01	45.30	47.71	46.33	45.00	44.24	38.81	48.19
	5.01	-24.26	-20.40	-21.70	-27.06	-24.60	-31.08	-19.25
	87.89	19.11	15.74	19.09	20.07	26.98	26.21	18.17
4	4.02	45.78	48.11	46.93	46.47	45.26	41.72	48.94
	5.01	-27.51	-24.21	-26.05	-31.12	-28.75	-32.41	-23.51
	91.48	20.52	16.41	20.97	20.62	25.70	25.37	16.82
6	7.99	47.70	51.23	47.78	47.67.	47.26	42.97	50.97
	5.01	-31.57	-26.77	-30.76	-35.46	-33.27	-37.48	-25.35
	90.39	20.73	14.93	20.58	19.66	24.16	24.32	13.92
7	11.99	48.82	50.90	49.94	48.67	45.19	38.53	48.19
	5.01	-36.35	-33.70	-35.51	-40.70	-41.08	-47.63	-29.44
	87.98	20.52	16.33	19.42	18.58	23.17	19.20	9.79
10	22.00	50.87	48.10	43.01	37.93	29.15	23.47	42.28
	5.01	-80.70	-80.04	-82.50	-87.98	-83.59	-82.32	-30.06
	99.06	20.81	12.88	8.87	-6.03	-8.57	-7.45	6.42

PROPULSIVE WING FLOW FIELD

RAKE SUMMARY, RUN 278

PT	ALPHA BETA HEIGHT	VT1 ALP1 BET1	VT2 ALP2 BET2	VT3 ALP3 BET3	VT4 ALP4 BET4	VT5 ALP5 BET5	VT6 ALP6 BET6	VT7 ALP7 BET7
2	-0.01	84.81	87.87	87.06	85.82	82.17	58.73	87.59
	5.01	-21.41	-19.23	-20.41	-23.83	-21.86	-21.30	-18.06
	88.42	16.81	15.77	16.80	21.08	24.42	25.07	18.25

PROPULSIVE WING FLOW FIELD

RAKE SUMMARY, RUN 280

PT	ALPHA BETA HEIGHT	VT1 ALP1 BET1	VT2 ALP2 BET2	VT3 ALP3 BET3	VT4 ALP4 BET4	VT5 ALP5 BET5	VT6 ALP6 BET6	VT7 ALP7 BET7
3	0.01	157.30	163.00	157.80	146.80	113.30	111.80	148.70
	0.00	-14.87	-14.27	-15.87	-19.49	-20.20	-7.74	-3.80
	88.74	4.53	3.97	3.51	4.00	10.84	14.58	6.86
6	3.98	158.20	162.90	155.20	132.10	88.25	117.90	149.20
	0.00	-17.46	-16.46	-18.41	-23.18	-17.03	-4.38	-4.20
	87.14	4.87	3.54	2.98	4.10	15.13	14.84	4.23
8	8.02	155.00	158.40	148.70	115.70	98.44	113.60	149.90
	-0.01	-18.21	-17.15	-20.46	-24.48	-15.78	-7.26	-8.73
	87.55	4.04	2.42	2.74	5.42	15.20	11.81	1.96
9	12.02	154.90	155.60	136.80	103.80	84.61	105.90	140.30
	0.00	-19.71	-19.47	-22.04	-24.90	-15.80	-10.87	-10.22
	88.12	3.23	0.77	2.15	0.53	6.42	5.95	-0.50
12	21.98	85.06	78.01	74.88	71.83	94.87	148.00	180.00
	-0.01	-42.34	-37.64	-35.06	-25.42	-8.42	-9.20	-12.45
	87.88	-49.15	-48.20	-49.95	-48.33	-20.35	-8.93	-3.46

PROPULSIVE WING FLOW FIELD

RAKE SUMMARY, RUN 304

PT	ALPHA BETA HEIGHT	VT1 ALP1 BET1	VT2 ALP2 BET2	VT3 ALP3 BET3	VT4 ALP4 BET4	VT5 ALP5 BET5	VT6 ALP6 BET6	VT7 ALP7 BET7
2	0.00	35.11	38.66	33.98	35.25	35.10	36.00	48.85
	0.00	-37.52	-22.41	-26.31	-43.66	-46.12	-47.42	-25.51
	90.51	23.64	7.51	14.78	7.04	10.56	14.42	9.96
4	4.01	36.53	38.36	35.43	36.64	36.87	37.67	47.85
	0.00	-46.47	-25.81	-32.61	-46.25	-43.25	-56.51	-30.56
	88.94	23.13	9.46	15.87	10.14	10.36	16.25	11.67
6	7.96	37.52	40.74	36.04	37.23	36.22	36.80	47.87
	0.00	-43.82	-32.56	-35.76	-46.42	-46.56	-54.79	-35.63
	84.26	23.98	9.63	16.57	11.36	21.06	20.07	13.10
7	11.96	38.33	40.27	35.73	37.86	36.66	37.51	43.86
	0.00	-47.38	-36.04	-44.88	-52.76	-51.66	-62.56	-38.43
	84.83	24.86	11.11	19.72	11.49	22.32	17.46	9.27
10	21.96	41.24	42.03	38.17	40.86	36.52	38.47	43.86
	0.00	-54.62	-56.36	-62.06	-66.86	-71.12	-75.63	-51.83
	90.10	26.43	12.95	17.18	5.14	11.74	-0.71	3.64

PROPULSIVE WING FLOW FIELD

RAKE SUMMARY, RUN 305

PT	ALPHA BETA HEIGHT	VT1 ALP1 BET1	VT2 ALP2 BET2	VT3 ALP3 BET3	VT4 ALP4 BET4	VT5 ALP5 BET5	VT6 ALP6 BET6	VT7 ALP7 BET7
2	-0.01	51.87	54.00	52.62	53.25	53.23	54.20	52.00
	0.00	-30.30	-25.77	-28.14	-34.31	-34.67	-36.07	-30.43
	89.51	15.60	9.74	13.90	12.22	16.40	18.21	17.05
4	4.04	52.50	55.41	52.81	53.51	54.22	55.20	52.20
	0.00	-34.26	-29.51	-31.56	-36.62	-36.54	-42.21	-34.50
	87.50	16.83	11.20	15.16	13.50	19.81	21.76	16.90
6	8.00	53.02	55.77	53.03	54.05	54.06	55.04	52.02
	0.00	-36.52	-35.35	-37.00	-42.91	-44.05	-46.50	-40.24
	88.33	17.91	11.56	16.79	13.16	19.76	20.02	17.77
7	11.95	54.04	56.04	54.07	55.40	56.02	55.81	54.04
	0.00	-43.38	-40.63	-42.50	-46.06	-46.95	-55.29	-46.30
	87.78	18.06	12.14	15.04	13.46	19.20	18.60	13.25
10	22.04	56.05	60.51	58.04	58.96	58.44	57.73	55.90
	0.00	-61.54	-58.37	-62.40	-65.31	-68.42	-73.13	-62.86
	90.26	18.06	10.58	11.22	3.37	6.57	2.02	3.21

PROPULSIVE WING FLOW FIELD

RAKE SUMMARY, RUN 306

PT	ALPHA BETA WEIGHT	VT1 ALP1 BET1	VT2 ALP2 BET2	VT3 ALP3 BET3	VT4 ALP4 BET4	VT5 ALP5 BET5	VT6 ALP6 BET6	VT7 ALP7 BET7
2	0.02	72.46	75.07	74.03	74.50	74.31	75.07	79.08
	0.00	-35.83	-34.48	-35.55	-30.96	-32.34	-35.56	-33.51
	96.05	12.30	10.70	13.58	12.13	10.15	25.01	24.20
4	4.00	73.25	76.40	75.00	75.95	75.82	76.86	82.07
	0.00	-30.75	-29.71	-30.41	-34.33	-36.42	-40.31	-37.63
	87.82	14.08	12.06	14.40	14.40	20.63	24.90	24.62
6	8.07	74.63	76.40	77.34	77.58	77.42	78.00	84.20
	0.00	-38.13	-33.88	-35.98	-39.57	-41.82	-45.17	-43.61
	88.30	14.07	11.88	13.30	12.70	17.40	19.80	18.83
7	11.00	75.83	80.07	79.94	80.38	79.80	79.42	81.07
	0.00	-41.45	-38.00	-41.22	-44.80	-47.43	-51.48	-48.85
	87.16	14.82	11.72	13.07	11.56	15.03	15.15	12.48
10	22.01	85.75	88.04	88.95	88.37	86.12	85.03	86.58
	0.00	-60.58	-53.76	-51.41	-54.21	-60.87	-70.07	-66.64
	90.15	11.86	8.84	4.75	-1.32	-2.90	-4.84	-3.80

PROPULSIVE WING FLOW FIELD

RAKE SUMMARY, RUN 307

PT	ALPHA BETA WEIGHT	VT1 ALP1 BET1	VT2 ALP2 BET2	VT3 ALP3 BET3	VT4 ALP4 BET4	VT5 ALP5 BET5	VT6 ALP6 BET6	VT7 ALP7 BET7
2	0.02	103.50	107.00	107.00	107.00	107.50	107.00	111.50
	0.00	-24.00	-23.42	-25.53	-28.66	-32.66	-36.04	-36.12
	89.31	11.51	11.42	13.73	15.07	20.00	24.47	24.74
4	3.00	104.50	108.70	108.40	108.00	108.00	110.00	114.10
	0.00	-26.45	-27.20	-29.26	-32.83	-35.26	-40.51	-40.80
	85.00	12.61	12.37	14.42	15.54	20.77	23.07	24.61
6	7.00	107.20	111.50	111.20	112.10	111.20	113.00	117.30
	0.00	-33.25	-32.04	-33.82	-36.53	-39.00	-43.40	-45.50
	84.36	12.33	11.38	12.61	12.05	18.99	20.02	22.52
7	12.03	111.10	115.00	115.00	116.10	114.60	116.10	120.30
	0.00	-39.65	-38.14	-39.55	-41.73	-44.25	-46.52	-47.27
	87.59	11.45	9.02	9.50	8.00	9.42	10.44	11.50
10	22.00	123.50	127.20	125.50	124.90	118.40	113.00	106.80
	0.00	-58.81	-57.46	-59.11	-60.38	-62.10	-63.31	-61.11
	98.04	8.70	3.04	-0.50	-5.00	-9.33	-9.10	-6.38

PROPULSIVE WING FLOW FIELD

RAKE SUMMARY, RUN 315

PT	ALPHA BETA HEIGHT	VT1 ALP1 BET1	VT2 ALP2 BET2	VT3 ALP3 BET3	VT4 ALP4 BET4	VT5 ALP5 BET5	VT6 ALP6 BET6	VT7 ALP7 BET7
2	-0.00	22.27	32.34	41.50	44.12	33.07	30.63	40.36
	-0.01	-12.00	-33.05	-43.04	-34.61	-35.36	-27.72	-38.00
	80.72	-11.05	42.07	31.15	30.30	34.00	30.53	70.06
4	4.02	31.37	35.52	43.00	47.06	36.44	30.05	49.75
	-0.01	-30.25	-36.56	-47.07	-30.75	-30.30	-31.20	-34.52
	80.06	-10.03	44.50	34.51	37.06	36.03	30.47	70.06
6	7.00	31.34	37.00	45.30	47.01	37.05	40.37	50.35
	-0.01	-35.04	-42.34	-52.07	-33.50	-42.11	-34.77	-37.22
	80.57	-4.50	40.70	30.00	30.00	37.05	30.30	74.41
7	11.00	30.42	37.72	44.15	47.07	30.04	30.17	40.61
	-0.01	-35.73	-45.10	-54.10	-36.02	-44.51	-36.04	-38.03
	80.70	-0.20	50.35	34.42	30.61	30.10	40.04	72.23
10	21.00	21.04	30.70	42.31	40.10	27.10	33.10	44.00
	-0.01	-50.50	-60.75	-74.70	-47.72	-05.20	-42.06	-51.41
	80.53	3.00	54.41	37.08	45.41	44.03	37.33	70.74

PROPULSIVE WING FLOW FIELD

RAKE SUMMARY, RUN 316

PT	ALPHA BETA HEIGHT	VT1 ALP1 BET1	VT2 ALP2 BET2	VT3 ALP3 BET3	VT4 ALP4 BET4	VT5 ALP5 BET5	VT6 ALP6 BET6	VT7 ALP7 BET7
3	-0.01	40.05	51.22	53.16	53.43	51.40	52.71	53.53
	-0.01	-20.53	-26.44	-26.11	-20.05	-31.20	-31.00	-31.24
	87.30	15.50	17.00	16.45	16.00	25.53	20.25	34.02
4	2.01	40.06	52.15	53.70	53.45	52.20	53.21	54.71
	0.00	-30.22	-28.01	-30.17	-31.54	-22.20	-23.40	-22.52
	87.07	16.46	17.66	16.66	16.53	25.31	20.00	33.20
6	5.05	50.25	53.40	56.06	56.02	54.00	54.51	57.35
	-0.01	-34.64	-34.10	-34.23	-35.50	-36.24	-37.45	-35.47
	87.72	20.70	22.00	22.63	23.00	20.07	27.31	27.40
7	12.04	52.45	56.33	55.02	50.02	46.20	46.67	50.17
	-0.01	-43.25	-42.00	-44.50	-45.01	-46.00	-44.07	-42.73
	87.25	26.42	26.30	24.50	21.20	22.00	21.06	21.10
10	22.01	53.30	55.14	54.34	53.43	51.57	50.30	50.54
	-0.01	-70.00	-75.95	-73.74	-71.27	-72.33	-72.05	-71.41
	80.20	2.47	-1.90	-7.04	-12.70	-13.73	-10.33	-4.00

PROPULSIVE WING FLOW FIELD

RAKE SUMMARY, RUN 317

PT	ALPHA BETA HEIGHT	VT1 ALP1 BET1	VT2 ALP2 BET2	VT3 ALP3 BET3	VT4 ALP4 BET4	VT5 ALP5 BET5	VT6 ALP6 BET6	VT7 ALP7 BET7
2	0.00	68.67	73.04	72.87	74.02	72.10	74.56	75.04
	-0.01	-25.97	-25.10	-26.22	-26.26	-30.87	-31.56	-32.14
	87.75	11.34	12.52	13.01	13.00	17.76	20.52	24.53
4	4.00	70.38	74.00	74.50	75.46	73.55	71.70	72.73
	0.00	-26.52	-27.45	-30.40	-31.72	-34.34	-34.56	-34.67
	86.92	15.36	16.40	18.30	18.02	22.15	24.61	26.44
6	8.02	74.77	77.44	78.61	72.25	67.61	67.77	70.72
	-0.01	-38.16	-39.41	-41.78	-44.86	-46.71	-45.86	-44.36
	87.53	10.14	10.34	10.45	16.23	15.56	13.76	15.13
7	12.07	78.06	78.68	76.17	72.03	66.64	65.95	67.68
	-0.01	-52.74	-53.51	-54.86	-56.42	-56.51	-56.03	-56.10
	86.66	14.20	11.07	8.48	1.95	-0.13	2.51	4.96
10	22.04	80.04	76.02	77.44	76.74	76.01	77.38	77.25
	-0.01	-76.05	-73.56	-70.43	-66.53	-68.10	-70.75	-71.64
	87.42	-21.94	-24.04	-26.83	-26.82	-26.07	-26.66	-12.33

PROPULSIVE WING FLOW FIELD

RAKE SUMMARY, RUN 316

PT	ALPHA BETA HEIGHT	VT1 ALP1 BET1	VT2 ALP2 BET2	VT3 ALP3 BET3	VT4 ALP4 BET4	VT5 ALP5 BET5	VT6 ALP6 BET6	VT7 ALP7 BET7
2	0.02	100.50	103.70	105.00	104.50	96.80	95.25	96.75
	-0.01	-21.41	-21.41	-22.74	-25.66	-27.44	-28.66	-29.77
	87.95	16.87	17.33	13.17	14.25	16.00	22.84	25.14
4	4.00	103.00	107.20	106.00	102.80	95.04	93.52	96.07
	-0.01	-31.00	-31.45	-34.60	-37.20	-40.60	-40.50	-38.80
	87.78	14.45	14.85	14.42	12.02	12.23	9.57	10.24
6	8.01	100.20	100.80	103.70	98.43	88.37	87.11	94.00
	-0.01	-42.08	-41.82	-43.20	-45.12	-47.04	-46.10	-46.24
	86.34	11.04	8.80	6.41	4.25	1.91	2.80	1.52
7	12.07	108.20	112.40	114.40	114.50	112.00	112.00	114.20
	-0.01	-61.57	-60.07	-58.63	-57.25	-56.74	-56.07	-55.01
	87.07	9.41	-0.34	-10.25	-14.78	-17.16	-12.56	-9.66
8	16.06	100.80	115.00	116.80	116.20	116.30	115.80	115.00
	-0.01	-70.12	-67.06	-64.93	-62.53	-61.05	-60.94	-59.32
	87.58	-1.96	-7.82	-14.71	-16.79	-17.24	-13.36	-11.61
10	22.00	92.75	93.67	90.00	86.84	88.70	91.77	95.00
	-0.01	-76.93	-72.50	-71.05	-70.91	-68.77	-67.88	-64.25
	95.76	-24.63	-18.05	-25.71	-26.18	-24.61	-24.20	-20.14

PROPULSIVE WING FLOW FIELD

RAKE SUMMARY, RUN 320

PT	ALPHA BETA HEIGHT	VT1 ALP1 BET1	VT2 ALP2 BET2	VT3 ALP3 BET3	VT4 ALP4 BET4	VT5 ALP5 BET5	VT6 ALP6 BET6	VT7 ALP7 BET7
2	-0.01	29.88	37.38	34.27	37.18	19.20	21.90	47.11
	0.00	-18.04	-0.02	48.27	3.24	-24.42	0.00	-6.51
	18.02	43.70	-14.54	-24.97	-38.70	10.02	-60.40	-4.00
3	-0.01	31.19	34.91	35.22	38.37	20.40	22.08	47.07
	0.00	-16.28	-1.10	44.50	2.80	-18.84	-1.15	-6.07
	18.02	42.00	-18.06	-21.08	-38.95	12.81	-60.06	-3.06
4	-0.03	32.22	36.96	34.11	38.54	21.00	23.02	47.03
	0.00	-15.56	-0.01	45.75	2.81	-25.56	0.56	-6.06
	22.23	40.54	-15.27	-23.00	-38.14	14.08	-55.50	-4.06
5	-0.04	32.26	38.02	35.71	41.00	22.57	26.74	51.57
	0.00	-20.18	-0.08	46.46	4.04	-24.08	-1.03	-5.95
	00.01	45.30	-14.33	-24.33	-40.57	12.06	-58.50	-3.04
6	-0.07	33.25	38.04	36.56	40.00	27.23	24.07	48.04
	0.00	-17.56	-0.00	42.74	3.51	-15.00	-2.27	-5.50
	87.06	40.82	-16.12	-20.06	-43.43	13.71	-60.01	-4.15

PROPULSIVE WING FLOW FIELD

RAKE SUMMARY, RUN 321

PT	ALPHA BETA HEIGHT	VT1 ALP1 BET1	VT2 ALP2 BET2	VT3 ALP3 BET3	VT4 ALP4 BET4	VT5 ALP5 BET5	VT6 ALP6 BET6	VT7 ALP7 BET7
1	8.06	34.13	41.16	37.07	40.00	19.08	24.01	52.75
	5.00	-20.04	-0.02	38.13	-1.05	-16.90	-2.30	-12.06
	47.56	40.01	-12.63	-22.17	-38.30	11.42	-60.17	-3.40
2	8.04	33.00	36.75	37.04	40.08	20.14	24.00	50.02
	5.00	-20.04	-0.01	34.45	-1.50	-23.73	-2.02	-12.04
	00.00	42.00	-15.20	-21.38	-38.01	8.70	-58.25	-3.02
3	8.04	33.53	36.20	37.56	40.13	22.71	23.01	52.63
	5.00	-20.38	-0.01	33.40	-1.40	-18.06	-3.03	-13.01
	87.05	41.00	-16.11	-21.46	-43.00	8.70	-60.20	-3.73

PROPULSIVE WING FLOW FIELD

RAKE SUMMARY, RUN 322

PT	ALPHA BETA HEIGHT	VT1 ALP1 BET1	VT2 ALP2 BET2	VT3 ALP3 BET3	VT4 ALP4 BET4	VT5 ALP5 BET5	VT6 ALP6 BET6	VT7 ALP7 BET7
2	-0.11	34.01	41.70	38.14	41.06	24.07	27.24	55.20
	0.00	-20.79	0.15	48.71	5.44	-17.13	-0.20	-5.11
	19.11	44.33	-13.41	-24.05	-38.00	0.22	-57.10	-3.02
3	-0.12	33.00	41.97	38.27	41.06	30.14	27.97	56.23
	0.00	-18.27	-0.00	44.53	4.87	-19.05	-3.31	-5.30
	32.81	43.51	-13.04	-23.24	-42.25	15.05	-56.42	-3.46
4	0.06	34.46	40.29	38.03	42.94	35.51	28.45	56.52
	0.00	-19.04	-0.75	43.58	4.57	-20.68	-4.85	-5.04
	65.67	44.31	-16.10	-23.25	-43.20	18.20	-63.52	-3.43
5	0.04	34.02	42.50	38.02	42.90	34.57	28.07	54.70
	0.00	-20.05	-0.07	45.06	3.84	-20.30	-4.03	-5.76
	87.08	44.43	-14.54	-24.38	-43.93	16.22	-58.61	-3.70

PROPULSIVE WING FLOW FIELD

RAKE SUMMARY, RUN 323

PT	ALPHA BETA HEIGHT	VT1 ALP1 BET1	VT2 ALP2 BET2	VT3 ALP3 BET3	VT4 ALP4 BET4	VT5 ALP5 BET5	VT6 ALP6 BET6	VT7 ALP7 BET7
1	0.04	35.17	40.06	41.31	43.10	29.28	27.67	57.46
	5.01	-25.81	-5.75	36.01	0.51	-24.08	-3.46	-12.00
	47.96	43.10	-16.20	-21.11	-40.00	12.27	-64.73	-3.44
2	0.03	33.00	43.40	41.06	43.38	27.04	26.04	56.53
	5.01	-26.71	-5.54	38.05	-3.49	-22.24	-1.12	-11.50
	65.06	44.06	-14.93	-22.31	-33.04	16.31	-56.12	-2.75
3	0.02	32.06	44.06	42.46	44.46	25.07	24.06	56.13
	5.01	-30.54	-5.35	32.10	-2.10	-22.20	-2.26	-11.06
	87.03	45.36	-14.26	-19.57	-32.00	15.01	-60.46	-2.52

PROPULSIVE WING FLOW FIELD

RAKE SUMMARY, RUN 324

PT	ALPHA BETA HEIGHT	VT1 ALP1 BET1	VT2 ALP2 BET2	VT3 ALP3 BET3	VT4 ALP4 BET4	VT5 ALP5 BET5	VT6 ALP6 BET6	VT7 ALP7 BET7
2	0.03	37.14	43.02	41.08	44.07	17.22	29.63	60.35
	5.01	-30.30	-7.53	30.00	-2.42	-27.00	-8.29	-12.86
	47.03	47.31	-12.06	-21.30	-41.06	6.16	-64.46	-2.40
3	0.02	36.22	44.05	41.08	43.00	16.06	29.49	60.15
	5.01	-30.47	-6.53	30.68	-2.16	-15.77	-8.25	-12.54
	95.02	47.81	-12.13	-20.45	-38.62	6.11	-65.22	-2.16
4	0.02	35.06	44.00	41.42	44.30	16.30	29.11	60.66
	5.01	-31.25	-7.05	32.06	-2.06	-15.06	-7.76	-11.00
	87.10	48.21	-13.66	-19.66	-34.76	6.26	-64.87	-2.40

PROPULSIVE WING FLOW FIELD

RAKE SUMMARY, RUN 325

PT	ALPHA BETA HEIGHT	VT1 ALP1 BET1	VT2 ALP2 BET2	VT3 ALP3 BET3	VT4 ALP4 BET4	VT5 ALP5 BET5	VT6 ALP6 BET6	VT7 ALP7 BET7
1	0.00	37.02	43.00	40.63	44.75	17.53	30.30	61.00
	0.00	-21.13	0.10	44.35	5.00	-15.00	-3.04	-4.00
	10.50	45.01	-11.46	-21.03	-42.53	-1.00	-63.04	-2.04
2	-0.02	37.06	-42.10	40.03	43.73	21.12	30.15	60.70
	0.00	-16.77	-0.22	45.21	5.00	-17.06	-4.72	-5.32
	32.61	45.23	-14.26	-21.41	-42.71	6.63	-64.17	-2.77

PROPULSIVE WING FLOW FIELD

RAKE SUMMARY. RUN 395

PT	ALPHA BETA HEIGHT	VT1 ALP1 BET1	VT2 ALP2 BET2	VT3 ALP3 BET3	VT4 ALP4 BET4	VT5 ALP5 BET5	VT6 ALP6 BET6	VT7 ALP7 BET7
1	0.00	37.44	43.20	40.07	42.00	18.04	20.32	60.20
	0.00	-21.72	0.44	44.00	5.83	-10.33	-3.40	-5.20
	10.20	47.02	-11.22	-10.46	-42.00	4.76	-62.63	-2.40
2	-0.02	38.06	43.46	40.01	44.15	21.78	20.05	61.00
	0.00	-21.70	0.06	44.46	4.87	-10.11	-5.00	-5.14
	22.04	48.04	-11.83	-20.41	-45.04	5.01	-63.41	-2.06
3	-0.04	37.00	44.12	40.42	44.14	23.00	30.02	60.45
	0.00	-20.04	-0.20	44.03	4.30	-18.75	-4.37	-5.26
	00.00	44.02	-12.04	-21.40	-43.05	10.03	-60.56	-2.07
4	0.04	37.30	43.60	41.01	44.06	24.00	30.72	60.00
	0.00	-21.01	0.24	44.03	0.00	-18.01	-3.53	-5.10
	07.30	47.13	-11.52	-20.10	-42.03	12.44	-64.36	-2.77

PROPULSIVE WING FLOW FIELD

RAKE SUMMARY. RUN 397

PT	ALPHA BETA HEIGHT	VT1 ALP1 BET1	VT2 ALP2 BET2	VT3 ALP3 BET3	VT4 ALP4 BET4	VT5 ALP5 BET5	VT6 ALP6 BET6	VT7 ALP7 BET7
2	0.02	38.20	44.05	40.63	44.04	18.92	30.74	02.07
	0.00	-21.43	-0.00	40.20	4.34	-5.27	-4.33	-4.02
	10.36	47.03	-10.30	-17.75	-41.23	-7.13	-60.16	-2.46
3	0.00	37.06	43.50	41.27	44.34	15.00	31.31	61.02
	0.00	-21.23	-0.32	41.00	3.27	-11.00	-4.02	-5.06
	22.00	40.00	-13.20	-18.02	-41.43	-6.13	-60.51	-2.50
4	-0.02	37.50	44.42	41.50	44.50	15.05	30.00	00.33
	0.00	-21.46	0.04	42.42	5.00	-15.31	-5.10	-5.46
	00.00	47.02	-10.57	-18.01	-42.07	-8.00	-64.46	-2.57
5	-0.04	36.04	43.52	41.20	44.40	18.20	30.55	01.50
	0.00	-21.02	-0.50	43.03	4.56	-10.14	-4.14	-5.00
	07.00	47.11	-12.00	-18.52	-43.06	2.10	-60.66	-2.30

PROPULSIVE WING FLOW FIELD

BASE SUMMARY, RUN 326

PT	ALPHA BETA WEIGHT	VT1 ALP1 BET1	VT2 ALP2 BET2	VT3 ALP3 BET3	VT4 ALP4 BET4	VT5 ALP5 BET5	VT6 ALP6 BET6	VT7 ALP7 BET7
1	8.07	27.26	40.58	26.68	37.21	23.12	29.04	52.20
	5.01	-29.01	-3.88	41.88	-2.73	-10.73	-14.53	-12.78
	48.00	35.06	-7.35	-43.01	-64.66	-0.53	-71.42	-1.50
2	8.08	26.97	40.12	26.75	36.06	23.40	29.40	52.20
	5.01	-29.87	-3.20	42.02	-1.82	-10.28	-14.61	-12.75
	66.01	35.00	-7.86	-42.20	-63.50	1.22	-70.51	-1.72
3	8.06	26.71	39.29	26.04	37.07	24.09	26.07	50.50
	5.01	-30.33	-3.53	46.61	-3.36	-12.02	-15.52	-12.00
	87.40	34.15	-8.17	-45.68	-45.52	2.46	-71.37	-1.00

PROPULSIVE WING FLOW FIELD

BASE SUMMARY, RUN 326

PT	ALPHA BETA WEIGHT	VT1 ALP1 BET1	VT2 ALP2 BET2	VT3 ALP3 BET3	VT4 ALP4 BET4	VT5 ALP5 BET5	VT6 ALP6 BET6	VT7 ALP7 BET7
1	8.07	26.26	40.34	31.26	36.22	24.26	30.40	51.50
	5.01	-32.26	-3.53	44.02	-2.23	-15.20	-15.31	-12.43
	48.06	30.75	-7.85	-47.04	-44.56	4.26	-71.04	-1.01
2	8.05	25.02	39.36	32.66	36.02	26.10	30.47	51.50
	5.01	-31.26	-2.02	45.01	-2.21	-12.00	-13.26	-11.00
	66.03	37.63	-8.24	-43.10	-41.26	4.00	-72.10	-1.06
3	8.05	26.00	38.36	31.27	36.30	25.02	30.74	52.00
	5.01	-30.24	-2.57	45.76	-2.11	-12.76	-12.23	-12.05
	87.46	30.37	-10.46	-45.30	-41.50	4.42	-72.77	-1.70

PROPULSIVE WING FLOW FIELD

RAKE SUMMARY, RUN 330

PT	ALPHA BETA HEIGHT	VT1 ALP1 BET1	VT2 ALP2 BET2	VT3 ALP3 BET3	VT4 ALP4 BET4	VT5 ALP5 BET5	VT6 ALP6 BET6	VT7 ALP7 BET7
1	8.07	27.46	30.36	33.84	36.87	34.38	30.83	53.18
	5.01	-25.84	-2.31	43.87	0.31	-19.88	-8.90	-11.73
	48.10	34.52	-12.26	-46.00	-43.31	12.00	-72.12	-3.46
2	8.00	25.40	40.12	32.37	39.03	34.16	29.70	53.58
	5.01	-28.81	-1.35	40.44	-2.40	-17.42	-4.83	-10.75
	85.51	31.20	-13.78	-41.04	-35.86	11.68	-70.58	-2.30
3	8.05	25.00	41.73	33.04	39.45	33.30	29.45	54.05
	5.01	-27.80	-1.00	41.10	-3.30	-17.50	-6.44	-10.95
	88.73	30.03	-12.45	-36.83	-36.92	10.83	-71.30	-1.87

PROPULSIVE WING FLOW FIELD

RAKE SUMMARY, RUN 331

PT	ALPHA BETA HEIGHT	VT1 ALP1 BET1	VT2 ALP2 BET2	VT3 ALP3 BET3	VT4 ALP4 BET4	VT5 ALP5 BET5	VT6 ALP6 BET6	VT7 ALP7 BET7
1	0.03	26.52	42.57	30.11	30.88	28.38	31.76	54.10
	0.00	-23.73	5.28	44.25	4.85	-15.48	-5.42	-5.07
	19.66	42.06	-8.22	-40.66	-42.04	8.00	-67.71	-2.83
2	0.01	27.11	41.84	32.29	40.07	34.03	30.31	55.05
	0.00	-20.77	4.54	40.42	5.22	-10.75	-8.8[illegible]	-5.24
	32.84	38.48	-8.05	-40.06	-48.07	11.27	-66.74	-2.70
3	-0.01	26.07	40.40	32.00	41.24	30.82	32.19	55.38
	0.00	-20.29	4.10	40.33	4.11	-17.72	-7.85	-4.00
	65.61	37.34	-10.05	-47.00	-40.28	14.14	-70.03	-3.01
4	-0.03	27.40	40.54	32.10	42.30	30.20	33.34	55.25
	0.00	-22.20	4.31	40.20	5.40	-16.90	-8.31	-4.80
	87.03	35.16	-9.07	-46.26	-46.50	12.47	-68.84	-2.04

PROPULSIVE WING FLOW FIELD

RAKE SUMMARY, RUN 332

PT	ALPHA BETA HEIGHT	VT1 ALP1 BET1	VT2 ALP2 BET2	VT3 ALP3 BET3	VT4 ALP4 BET4	VT5 ALP5 BET5	VT6 ALP6 BET6	VT7 ALP7 BET7
1	0.13	27.60	40.35	30.51	30.26	27.74	26.10	54.60
	0.00	-10.40	4.44	48.79	3.20	-9.64	-5.20	-5.56
	10.87	36.10	-8.53	-44.06	-45.81	5.00	-63.57	-2.60
2	0.13	27.80	40.24	32.02	40.12	28.17	27.57	54.79
	0.00	-20.02	4.23	47.40	3.53	-14.15	-8.76	-5.05
	32.00	30.00	-8.87	-41.53	-43.73	8.92	-64.48	-2.66
3	0.11	27.00	39.56	31.45	40.27	28.71	28.00	55.15
	0.00	-29.20	4.54	45.87	3.71	-14.03	-8.64	-5.22
	65.70	30.30	-10.45	-40.34	-45.64	9.25	-65.75	-2.75
4	-0.02	27.30	38.90	32.13	38.57	30.44	28.43	54.87
	0.00	-18.84	4.28	48.24	3.56	-12.68	-7.38	-5.30
	88.83	35.32	-11.10	-37.97	-48.09	8.50	-64.48	-2.79

PROPULSIVE WING FLOW FIELD

RAKE SUMMARY, RUN 333

PT	ALPHA BETA HEIGHT	VT1 ALP1 BET1	VT2 ALP2 BET2	VT3 ALP3 BET3	VT4 ALP4 BET4	VT5 ALP5 BET5	VT6 ALP6 BET6	VT7 ALP7 BET7
1	0.02	29.22	36.87	32.20	30.07	28.00	29.00	54.93
	5.01	-26.16	-3.53	42.31	-0.77	-15.10	-9.01	-12.51
	47.51	37.30	-10.42	-45.30	-44.35	4.07	-70.01	-2.01
2	0.01	27.10	40.33	31.66	39.02	28.44	27.03	52.01
	5.01	-28.36	-3.15	38.32	-2.72	-15.40	-8.22	-13.00
	65.03	30.96	-9.35	-41.09	-47.06	5.23	-70.45	-3.04
3	0.01	27.86	39.26	30.44	30.95	29.06	30.41	54.60
	5.01	-26.90	-3.60	38.80	-0.31	-16.03	-8.38	-12.95
	87.60	37.07	-10.50	-39.92	-45.12	5.40	-70.62	-2.63

PROPULSIVE WING FLOW FIELD

RAKE SUMMARY, RUN 334

PT	ALPHA BETA HEIGHT	VT1 ALP1 BET1	VT2 ALP2 BET2	VT3 ALP3 BET3	VT4 ALP4 BET4	VT5 ALP5 BET5	VT6 ALP6 BET6	VT7 ALP7 BET7
2	-0.08	19.33	30.63	19.70	22.47	21.57	17.08	35.27
	0.00	17.37	35.52	-62.72	10.00	-13.69	2.25	76.05
	19.32	-51.85	84.45	-9.93	54.10	32.68	27.80	83.04
3	-0.08	18.12	21.11	18.38	18.68	20.34	15.45	34.02
	0.00	13.94	48.05	-49.17	18.06	-15.61	4.13	82.05
	32.75	-59.10	80.31	-11.14	63.30	29.08	21.51	-73.59
4	-0.10	15.12	21.26	17.86	16.90	22.01	14.32	32.21
	0.00	11.55	61.78	-45.64	22.44	-13.43	2.91	84.38
	65.84	-38.16	79.39	-18.83	64.01	27.03	25.24	-75.30

PROPULSIVE WING FLOW FIELD

RAKE SUMMARY, RUN 337

PT	ALPHA BETA HEIGHT	VT1 ALP1 BET1	VT2 ALP2 BET2	VT3 ALP3 BET3	VT4 ALP4 BET4	VT5 ALP5 BET5	VT6 ALP6 BET6	VT7 ALP7 BET7
2	-0.04	14.73	27.37	23.85	23.45	29.06	28.22	30.23
	0.00	33.50	-1.29	-23.24	-16.21	-16.51	12.54	-5.81
	19.18	-65.22	-23.21	-24.01	-12.33	4.54	-21.88	-19.54
3	-0.06	16.87	28.47	22.35	25.63	33.21	28.88	30.49
	0.00	31.62	-0.73	-21.39	-17.35	-18.92	16.21	-4.95
	32.85	-65.45	-21.84	-42.49	-19.60	12.09	-20.58	-18.74
4	0.01	17.79	28.11	23.00	26.37	33.18	30.51	27.17
	0.00	27.01	-1.13	-9.06	-18.01	-21.38	7.13	-6.43
	65.66	-62.89	-22.51	-29.50	-17.84	11.57	-28.08	-23.52
5	-0.02	13.08	28.05	22.81	27.59	34.37	30.56	20.10
	0.00	42.48	-0.92	-15.32	-15.59	-21.08	6.83	-5.87
	87.09	-49.38	-23.31	-38.17	-21.30	15.70	-25.71	-18.30

PROPULSIVE WING FLOW FIELD

RAKE SUMMARY, RUN 330

PT	ALPHA BETA HEIGHT	VT1 ALP1 BET1	VT2 ALP2 BET2	VT3 ALP3 BET3	VT4 ALP4 BET4	VT5 ALP5 BET5	VT6 ALP6 BET6	VT7 ALP7 BET7
1	-0.23	7.00	28.82	20.73	21.56	33.04	21.94	30.25
	0.00	-43.97	0.05	-18.17	-18.87	-18.77	1.21	-3.56
	10.20	-22.98	-10.40	-45.74	-8.12	13.34	-44.49	-10.25
2	-0.06	14.91	27.82	18.95	21.82	33.77	28.25	31.67
	0.00	15.17	-0.41	-14.03	-20.28	-23.33	-1.84	-6.28
	32.83	-82.27	-17.58	-39.27	-42.84	15.80	-33.52	-12.34
3	0.00	16.12	28.29	20.13	23.00	45.92	25.39	31.08
	0.00	-3.84	-2.08	3.41	-22.25	-22.83	-3.53	-4.56
	65.68	-81.52	-16.49	-42.06	-25.91	17.13	-55.67	-15.08
4	-0.02	18.80	31.54	19.97	22.22	45.84	26.12	30.04
	0.00	6.90	-0.25	6.50	-25.75	-22.74	-3.07	-4.76
	87.08	-77.02	-9.86	-46.55	-27.49	17.71	-56.74	-15.24

PROPULSIVE WING FLOW FIELD

RAKE SUMMARY, RUN 330

PT	ALPHA BETA HEIGHT	VT1 ALP1 BET1	VT2 ALP2 BET2	VT3 ALP3 BET3	VT4 ALP4 BET4	VT5 ALP5 BET5	VT6 ALP6 BET6	VT7 ALP7 BET7
1	0.08	16.90	27.01	18.10	22.20	24.25	19.81	31.81
	0.00	-42.41	-1.02	-15.80	-23.20	-21.73	-2.98	-3.81
	20.00	-77.50	-10.28	-27.19	-15.05	14.50	-43.31	-4.43
2	0.00	15.87	25.92	18.75	21.25	23.50	21.82	32.77
	0.00	-72.96	-0.50	-11.12	-18.87	-25.71	-5.50	-3.5[illegible]
	32.81	82.16	-12.03	-26.79	-22.50	15.66	-44.98	-4.85
3	-0.02	11.88	24.76	18.36	22.57	34.22	22.54	31.36
	0.00	-75.21	-3.83	-26.38	-21.54	-22.44	-8.79	-2.25
	65.88	-0.20	-17.15	-38.84	-13.47	18.71	-59.45	-7.10
4	-0.01	14.35	25.51	19.44	21.06	35.71	23.22	29.80
	0.00	-51.90	-0.72	-17.03	-18.66	-21.92	-8.38	-2.51
	87.01	-80.92	-11.28	-19.59	-26.51	17.44	-58.96	-7.85

PROPULSIVE WING FLOW FIELD

RAKE SUMMARY, RUN 340

PT	ALPHA BETA HEIGHT	VT1 ALP1 BET1	VT2 ALP2 BET2	VT3 ALP3 BET3	VT4 ALP4 BET4	VT5 ALP5 BET5	VT6 ALP6 BET6	VT7 ALP7 BET7
1	0.00	15.37	25.18	18.90	18.83	18.42	19.07	31.88
	0.00	-80.54	1.17	-20.43	-22.07	-24.82	-9.59	-2.14
	19.53	-28.47	-8.90	-18.81	-17.82	13.98	-49.78	-3.30
2	-0.02	15.04	27.80	18.20	18.75	16.63	19.33	32.82
	0.00	-47.07	0.29	-13.02	-18.51	-23.22	-9.17	-2.51
	32.81	-75.83	-7.87	-18.12	-9.06	15.51	-48.00	-3.27
3	0.00	18.14	24.11	18.78	19.28	24.87	20.33	31.10
	0.00	-64.77	-1.88	-15.44	-27.84	-24.06	-11.32	-2.55
	65.60	-78.60	-12.60	-17.63	-9.43	16.56	-49.91	-4.28
4	-0.02	13.94	24.61	15.05	19.25	25.61	20.14	30.91
	0.00	-74.43	-1.85	-18.57	-19.29	-23.43	-10.38	-2.45
	87.00	-48.21	-10.28	-38.00	-8.53	14.90	-49.18	-4.36

PROPULSIVE WING FLOW FIELD

RAKE SUMMARY, RUN 341

PT	ALPHA BETA HEIGHT	VT1 ALP1 BET1	VT2 ALP2 BET2	VT3 ALP3 BET3	VT4 ALP4 BET4	VT5 ALP5 BET5	VT6 ALP6 BET6	VT7 ALP7 BET7
1	0.00	18.05	28.47	17.25	20.06	13.56	15.63	32.46
	0.00	-70.87	0.02	-37.06	-25.54	-27.35	-8.35	-2.70
	19.35	-74.53	-6.28	-34.38	-12.90	-8.05	-50.22	-2.81
2	-0.05	17.70	29.30	15.05	20.55	14.09	19.04	32.94
	0.00	-84.04	-0.51	-10.32	-17.06	-18.53	-8.06	-2.90
	32.70	-31.41	-6.06	-18.40	-9.18	4.00	-46.52	-2.54
3	0.00	18.28	27.05	18.00	20.00	17.41	19.54	31.40
	0.00	-54.83	-6.57	-1.41	-20.13	-23.24	-7.02	-2.80
	65.61	-79.85	-8.80	-11.20	-1.45	4.01	-30.82	-3.82
4	-0.61	15.50	23.58	20.02	19.78	19.85	20.11	31.13
	0.00	-75.41	-1.19	-21.21	-18.20	-21.07	-8.51	-3.13
	86.00	-52.10	-11.00	-11.22	-18.53	14.02	-47.02	-3.17

PROPULSIVE WING FLOW FIELD

RAKE SUMMARY. RUN 342

PT	ALPHA BETA HEIGHT	VT1 ALP1 BET1	VT2 ALP2 BET2	VT3 ALP3 BET3	VT4 ALP4 BET4	VT5 ALP5 BET5	VT6 ALP6 BET6	VT7 ALP7 BET7
1	0.02	15.50	24.72	18.02	22.35	12.95	17.83	25.35
	0.00	-36.68	0.18	-20.67	-19.12	-20.00	-8.22	-2.35
	68.06	-77.50	-6.23	-14.26	4.06	6.30	-43.64	-6.54
2	-0.01	15.27	26.70	18.07	20.03	10.13	17.71	28.50
	0.00	-70.00	1.08	-12.78	-22.63	-18.78	-9.44	-2.48
	19.35	-80.38	-3.64	-8.06	0.35	-24.67	-42.92	-2.61
3	-0.02	15.57	24.20	18.57	19.86	11.23	18.77	30.57
	0.00	-77.02	1.90	-22.45	-18.50	-14.51	-8.06	-2.32
	32.85	42.29	-8.00	-9.61	3.86	-11.57	-42.95	-3.34
4	-0.01	16.56	25.45	18.51	20.60	14.23	18.91	30.30
	0.00	-71.31	0.81	-22.06	-21.38	-15.00	-6.60	-2.78
	65.66	-67.05	-7.02	-9.05	-5.43	-9.41	-48.26	-3.61
5	-0.02	16.15	28.27	17.31	20.40	14.22	19.51	29.66
	0.00	-37.27	-0.56	-65.52	-16.26	-28.63	-5.12	-2.77
	87.01	-81.00	-6.25	-34.03	-16.11	9.06	-42.30	-2.74

PROPULSIVE WING FLOW FIELD

RAKE SUMMARY. RUN 343

PT	ALPHA BETA HEIGHT	VT1 ALP1 BET1	VT2 ALP2 BET2	VT3 ALP3 BET3	VT4 ALP4 BET4	VT5 ALP5 BET5	VT6 ALP6 BET6	VT7 ALP7 BET7
1	8.05	15.90	26.01	17.02	20.32	11.81	18.00	27.07
	0.00	-48.94	-8.91	-27.20	-26.14	-21.24	-15.75	-10.00
	57.34	-77.06	-5.11	-10.16	1.16	-15.75	-42.04	-3.61
2	8.54	14.06	25.83	17.06	20.11	10.81	18.25	26.02
	0.00	-53.27	-8.05	-48.27	-33.25	-30.02	-14.77	-10.04
	65.00	-78.20	-7.23	-18.25	-10.50	-16.95	-45.81	-3.51
3	8.03	17.24	27.00	17.00	19.76	12.05	17.75	24.00
	0.00	-42.83	-7.77	-48.30	-34.53	-32.70	-16.36	-10.30
	87.04	-78.50	-5.06	-17.07	-6.50	0.12	-41.53	-3.17

PROPULSIVE WING FLOW FIELD

RAKE SUMMARY, RUN 244

PT	ALPHA BETA HEIGHT	VT1 ALP1 BET1	VT2 ALP2 BET2	VT3 ALP3 BET3	VT4 ALP4 BET4	VT5 ALP5 BET5	VT6 ALP6 BET6	VT7 ALP7 BET7
1	0.05	15.53	29.03	17.05	19.37	12.01	17.20	26.53
	0.00	-46.51	-9.90	-51.29	-21.72	-38.03	-15.57	-10.61
	48.20	-79.49	-8.17	-20.37	-13.77	-12.90	-42.29	-3.61
2	0.03	12.74	22.35	13.31	19.97	15.42	18.00	27.31
	0.00	-86.43	-8.86	-32.03	-29.05	-32.46	-18.42	-9.02
	85.60	-86.34	-8.99	-38.19	-1.50	18.77	-40.42	-3.42
3	0.02	16.04	23.58	22.71	21.00	15.71	19.04	27.72
	0.00	-86.17	-8.95	-15.02	-34.51	-28.88	-15.91	-10.45
	87.03	-87.80	-8.96	-4.02	-1.91	7.91	-44.20	-3.08

PROPULSIVE WING FLOW FIELD

RAKE SUMMARY, RUN 245

PT	ALPHA BETA HEIGHT	VT1 ALP1 BET1	VT2 ALP2 BET2	VT3 ALP3 BET3	VT4 ALP4 BET4	VT5 ALP5 BET5	VT6 ALP6 BET6	VT7 ALP7 BET7
1	-0.01	14.00	27.47	14.24	19.71	14.70	18.08	30.30
	0.00	-82.08	0.30	-23.41	-18.34	-21.74	-9.04	-2.88
	19.48	-22.34	-7.63	-26.96	-18.80	8.20	-48.18	-2.48
2	0.00	18.21	23.36	18.54	22.31	13.07	19.41	22.91
	0.00	-72.90	-6.96	-16.16	-15.20	-21.17	-7.01	-3.01
	32.86	-87.40	-10.03	-13.00	-10.80	8.50	-40.12	-2.86
3	-0.03	16.96	26.24	19.90	20.22	16.50	19.76	33.33
	0.00	-72.24	0.62	-21.78	-21.48	-23.52	-4.78	-3.28
	85.04	98.08	-8.50	-13.91	-12.82	-1.95	-40.66	-2.90
4	0.05	17.11	25.75	21.21	20.06	17.03	20.00	32.14
	0.00	-77.10	-0.04	-12.36	-19.20	-23.33	-8.31	-3.13
	87.06	30.70	-0.33	-10.44	-13.24	11.88	-44.30	-3.01

PROPULSIVE WING FLOW FIELD

RAKE SUMMARY, RUN 346

PT	ALPHA BETA HEIGHT	VT1 ALP1 BET1	VT2 ALP2 BET2	VT3 ALP3 BET3	VT4 ALP4 BET4	VT5 ALP5 BET5	VT6 ALP6 BET6	VT7 ALP7 BET7
1	-0.02	15.77	27.20	18.06	21.02	17.04	20.27	34.17
	0.00	-81.25	0.27	-2.90	-18.68	-24.57	-7.37	-2.36
	10.53	-46.00	-8.87	-18.54	-18.06	8.80	-44.82	-2.05
2	0.01	15.57	25.56	20.21	22.34	15.30	18.07	35.21
	0.00	-88.51	-6.46	-7.33	-20.63	-25.00	-10.06	-3.30
	22.86	57.25	-14.13	-18.30	-14.07	-8.17	-45.47	-2.70
3	-0.01	14.82	23.35	18.78	21.30	24.17	21.50	34.87
	0.00	-50.82	-6.18	0.54	-21.25	-24.25	-5.36	-3.20
	35.86	51.27	-15.57	-17.76	-15.46	12.30	-46.63	-3.17
4	-0.03	17.63	25.25	19.12	20.60	25.19	21.22	34.61
	0.00	-80.48	-1.76	-14.46	-18.26	-21.87	-10.87	-3.20
	57.00	26.45	-13.47	-22.08	-12.22	10.86	-50.80	-3.52

PROPULSIVE WING FLOW FIELD

RAKE SUMMARY, RUN 347

PT	ALPHA BETA HEIGHT	VT1 ALP1 BET1	VT2 ALP2 BET2	VT3 ALP3 BET3	VT4 ALP4 BET4	VT5 ALP5 BET5	VT6 ALP6 BET6	VT7 ALP7 BET7
1	-0.01	15.76	26.57	19.53	21.00	14.52	20.07	37.07
	0.00	-86.44	-7.02	-10.30	-22.00	-33.41	-19.17	-10.00
	48.17	5.83	-10.01	-18.31	-18.50	-4.49	-50.42	-2.56
2	0.07	18.61	25.14	17.96	21.20	22.30	21.00	38.00
	0.00	-74.15	-8.42	-8.20	-22.37	-32.61	-17.86	-11.25
	86.78	61.63	-9.11	-23.22	-27.06	17.96	-52.22	-3.30
3	0.06	16.25	27.30	19.51	21.26	24.02	22.27	37.00
	0.00	-63.97	-7.82	-12.84	-26.76	-30.70	-14.38	-10.86
	86.71	56.07	-12.31	-17.52	-24.53	16.67	-52.40	-2.40

PROPULSIVE WING FLOW FIELD

RAKE SUMMARY, RUN 340

PT	ALPHA BETA HEIGHT	VT1 ALP1 BET1	VT2 ALP2 BET2	VT3 ALP3 BET3	VT4 ALP4 BET4	VT5 ALP5 BET5	VT6 ALP6 BET6	VT7 ALP7 BET7
1	8.06	17.21	22.86	21.98	21.90	15.37	20.56	36.82
	5.01	-55.06	-9.25	-6.30	-14.53	-21.21	-14.40	-10.06
	48.44	50.09	-18.27	-11.02	-20.55	0.34	-50.67	-2.23
2	8.07	17.20	20.76	17.79	21.78	14.08	20.57	35.94
	5.01	-66.30	-7.02	-3.58	-20.44	-30.29	-11.35	-16.13
	65.68	65.78	-12.22	-27.76	-14.86	14.84	-52.29	-2.37
3	8.06	16.22	21.12	18.83	21.86	14.16	20.98	36.53
	5.01	-66.46	-5.48	17.63	-16.73	-26.25	-13.25	-9.77
	86.75	-60.16	-7.86	-40.45	-16.72	5.20	-53.27	-2.79

PROPULSIVE WING FLOW FIELD

RAKE SUMMARY, RUN 340

PT	ALPHA BETA HEIGHT	VT1 ALP1 BET1	VT2 ALP2 BET2	VT3 ALP3 BET3	VT4 ALP4 BET4	VT5 ALP5 BET5	VT6 ALP6 BET6	VT7 ALP7 BET7
1	0.02	17.00	22.37	17.57	21.12	16.01	21.12	37.63
	5.01	-57.06	0.75	-0.96	-6.31	-27.04	-9.24	-2.26
	10.00	66.57	-8.45	-26.31	-26.41	11.76	-54.61	-2.75
2	0.02	16.91	20.17	17.60	20.85	14.75	21.07	36.40
	5.01	-50.86	2.44	7.16	-16.50	-25.15	-6.14	-2.60
	22.81	62.52	-8.50	-27.14	-16.74	9.44	-51.20	-2.96
3	0.00	17.36	20.14	21.20	22.53	10.72	21.02	36.51
	5.01	-59.34	1.50	3.74	-9.33	-20.07	-5.90	-3.76
	66.63	50.61	-14.17	-14.86	-24.96	10.01	-52.62	-2.54
4	-0.02	17.91	20.06	16.47	21.44	16.60	22.11	36.24
	5.01	-61.15	1.40	4.62	-11.96	-20.51	-6.16	-2.45
	87.00	62.20	-11.36	-22.73	-26.87	10.26	-53.71	-2.77

PROPULSIVE WING FLOW FIELD

RAKE SUMMARY, RUN 350

PT	ALPHA BETA HEIGHT	VT1 ALP1 BET1	VT2 ALP2 BET2	VT3 ALP3 BET3	VT4 ALP4 BET4	VT5 ALP5 BET5	VT6 ALP6 BET6	VT7 ALP7 BET7
1	-0.02	17.47	25.98	22.04	23.45	21.75	21.71	42.04
	5.01	-42.12	0.92	-0.23	-6.31	-15.14	3.05	-2.94
	10.70	50.26	-15.78	-14.01	-20.05	4.61	-57.85	-3.38
2	0.02	19.49	32.40	29.05	25.55	22.53	22.40	42.70
	5.01	-52.20	1.47	-2.51	-4.48	-16.10	2.26	-2.98
	32.00	62.00	-8.78	-18.10	-24.27	5.60	-55.02	-3.40
3	0.00	15.17	31.40	21.70	23.03	23.46	21.90	41.54
	5.01	-73.01	3.03	14.22	-8.75	-21.83	2.37	-2.20
	05.00	50.04	-13.50	-25.24	-23.12	14.42	-53.10	-3.02
4	-0.01	18.30	30.07	21.43	24.55	25.18	22.02	42.10
	5.01	-54.36	2.00	13.17	-4.07	-19.00	3.19	-2.04
	07.00	62.02	-15.21	-26.17	-20.41	13.31	-50.78	-3.15

PROPULSIVE WING FLOW FIELD

RAKE SUMMARY, RUN 351

PT	ALPHA BETA HEIGHT	VT1 ALP1 BET1	VT2 ALP2 BET2	VT3 ALP3 BET3	VT4 ALP4 BET4	VT5 ALP5 BET5	VT6 ALP6 BET6	VT7 ALP7 BET7
1	8.03	17.30	20.98	22.01	22.33	18.18	21.72	42.20
	5.01	-73.04	-6.47	1.04	-14.70	-25.63	-6.26	-10.63
	40.34	62.37	-11.80	-20.00	-27.63	0.35	-54.61	-3.20
2	8.01	17.22	33.51	20.27	25.00	19.46	21.03	41.00
	5.01	-80.03	-3.00	13.20	-19.75	-26.00	-5.22	-8.44
	05.07	53.50	-11.71	-25.15	-17.34	8.01	-53.70	-3.03
3	8.01	17.01	34.10	21.51	26.19	19.46	22.46	42.29
	5.01	-86.55	-3.00	14.25	-18.41	-26.47	-5.66	-8.30
	07.03	22.05	-10.03	-32.06	-16.04	4.70	-53.02	-3.24

PROPULSIVE WING FLOW FIELD

RAKE SUMMARY, RUN 352

PT	ALPHA BETA HEIGHT	VT1 ALP1 BET1	VT2 ALP2 BET2	VT3 ALP3 BET3	VT4 ALP4 BET4	VT5 ALP5 BET5	VT6 ALP6 BET6	VT7 ALP7 BET7
1	0.04	18.95	31.00	18.82	24.46	25.00	23.45	42.21
	0.00	-50.54	-8.35	-9.01	-20.36	-31.43	-13.55	-11.62
	48.35	63.98	-13.00	-36.56	-31.77	11.32	-42.84	-4.30
2	0.02	19.68	29.75	21.25	25.49	34.46	24.07	42.68
	0.00	-61.37	-0.27	0.04	-21.46	-29.01	-15.56	-11.61
	65.62	67.54	-16.14	-25.66	-30.07	17.01	-53.18	-4.44
3	0.01	18.07	32.24	20.45	25.43	34.82	24.83	42.01
	0.00	-64.05	-8.40	-6.05	-19.03	-29.86	-14.66	-11.12
	86.73	62.50	-12.23	-26.05	-30.97	18.13	-54.84	-4.77

PROPULSIVE WING FLOW FIELD

RAKE SUMMARY, RUN 353

PT	ALPHA BETA HEIGHT	VT1 ALP1 BET1	VT2 ALP2 BET2	VT3 ALP3 BET3	VT4 ALP4 BET4	VT5 ALP5 BET5	VT6 ALP6 BET6	VT7 ALP7 BET7
1	0.01	17.07	32.46	19.75	26.56	22.06	22.31	42.20
	0.00	-63.62	0.18	8.76	-14.74	-22.72	-4.21	-4.02
	19.86	50.36	-10.30	-30.30	-27.63	11.01	-45.02	-3.67
2	-0.02	18.05	30.00	20.02	25.50	22.79	24.15	43.05
	0.00	-45.02	-1.00	5.04	-13.14	-24.05	-5.00	-4.07
	32.80	60.27	-14.91	-25.93	-34.95	7.75	-45.92	-3.40
3	-0.04	19.07	30.30	20.07	25.10	34.31	25.46	43.42
	0.00	-44.01	-1.30	7.91	-6.17	-22.23	-8.06	-3.54
	65.66	54.05	-16.05	-28.51	-34.03	13.00	-56.04	-4.13
4	-0.06	19.05	33.10	21.75	25.55	34.04	24.03	43.35
	0.00	-60.32	-0.60	15.10	-12.17	-20.50	-8.00	-3.76
	87.00	55.74	-16.12	-25.41	-30.10	18.41	-56.07	-3.99

PROPULSIVE WING FLOW FIELD

RAKE SUMMARY, RUN 354

PT	ALPHA BETA HEIGHT	VT1 ALP1 BET1	VT2 ALP2 BET2	VT3 ALP3 BET3	VT4 ALP4 BET4	VT5 ALP5 BET5	VT6 ALP6 BET6	VT7 ALP7 BET7
1	-0.01	18.20	36.46	25.05	27.07	34.20	25.63	44.05
	0.00	-34.21	-1.23	20.63	-0.26	-16.08	1.86	-3.61
	29.09	37.74	-13.82	-34.20	-26.41	14.36	-47.76	-5.46
2	-0.05	19.20	36.75	25.67	30.55	35.62	26.67	46.14
	0.00	-55.47	0.44	12.76	-7.71	-21.26	-3.20	-4.85
	32.87	75.71	-12.50	-21.00	-46.09	13.84	-40.41	-5.80
3	-0.06	18.26	33.09	24.83	26.67	45.01	28.40	44.16
	0.00	-40.05	-1.02	8.90	-8.46	-22.51	-4.20	-4.51
	65.87	62.80	-18.80	-32.87	-42.17	15.44	-57.49	-6.58
4	0.00	17.64	32.01	25.43	28.87	45.74	26.99	43.82
	0.00	-38.79	-0.82	14.51	-7.84	-21.52	-3.52	-4.42
	87.09	60.84	-19.42	-31.38	-41.91	16.32	-56.04	-6.72

PROPULSIVE WING FLOW FIELD

RAKE SUMMARY, RUN 356

PT	ALPHA BETA HEIGHT	VT1 ALP1 BET1	VT2 ALP2 BET2	VT3 ALP3 BET3	VT4 ALP4 BET4	VT5 ALP5 BET5	VT6 ALP6 BET6	VT7 ALP7 BET7
1	8.02	18.04	35.26	23.40	26.44	37.06	26.24	42.82
	0.00	-36.11	-8.66	13.81	-21.46	-30.66	-16.73	-12.42
	46.41	57.77	-16.28	-45.50	-36.77	14.74	-41.17	-6.56
2	8.01	19.63	34.46	25.13	30.44	46.18	26.46	43.27
	0.00	-60.15	-8.26	2.76	-14.40	-26.83	-12.12	-11.87
	85.84	73.00	-16.27	-29.01	-46.36	16.18	-57.06	-7.40
3	7.98	20.42	31.13	24.50	30.90	46.00	28.72	43.27
	0.00	-54.00	-8.63	2.84	-20.14	-30.56	-11.46	-11.83
	87.09	71.01	-23.00	-38.56	-43.06	15.00	-58.73	-7.55

PROPULSIVE WING FLOW FIELD

RAKE SUMMARY, RUN 356

PT	ALPHA BETA HEIGHT	VT1 ALP1 BET1	VT2 ALP2 BET2	VT3 ALP3 BET3	VT4 ALP4 BET4	VT5 ALP5 BET5	VT6 ALP6 BET6	VT7 ALP7 BET7
1	0.02	18.63	34.73	27.38	24.77	29.71	22.80	43.00
	5.01	-30.47	-8.15	11.44	-2.15	-21.71	9.55	-8.31
	48.40	67.57	-14.52	-24.16	-35.37	10.83	-49.05	-4.08
2	0.00	15.05	36.56	27.88	29.87	32.95	24.14	44.82
	5.01	-51.14	-2.12	21.48	-4.84	-22.53	11.36	-6.79
	85.68	73.42	-15.68	-29.90	-26.51	14.87	-52.58	-3.64
3	0.05	15.89	35.31	26.96	30.44	31.30	24.48	44.82
	5.01	-87.90	-1.19	12.95	-3.63	-23.79	13.78	-6.26
	87.21	87.73	-18.62	-22.25	-20.60	12.63	-58.04	-3.58

PROPULSIVE WING FLOW FIELD

RAKE SUMMARY, RUN 357

PT	ALPHA BETA HEIGHT	VT1 ALP1 BET1	VT2 ALP2 BET2	VT3 ALP3 BET3	VT4 ALP4 BET4	VT5 ALP5 BET5	VT6 ALP6 BET6	VT7 ALP7 BET7
1	0.01	17.50	34.96	24.90	25.99	29.74	25.13	44.46
	5.01	-37.98	-0.79	13.29	-8.77	-19.71	3.95	-4.37
	20.21	49.16	-14.20	-31.00	-35.87	10.74	-48.34	-9.79
2	-0.03	18.82	37.77	24.98	30.82	30.95	24.86	45.90
	5.01	-37.84	1.95	25.42	1.29	-13.75	17.30	-2.90
	32.81	55.05	-8.66	-31.01	-41.70	7.41	-52.30	-5.70
3	-0.05	17.87	37.00	25.63	26.66	35.37	26.38	47.90
	5.01	-24.31	5.10	32.29	19.43	-16.15	17.27	-0.00
	85.84	61.03	-14.18	-25.34	-40.23	14.94	-58.32	-3.73
4	-0.07	17.11	37.30	26.87	25.82	32.98	23.95	43.81
	5.01	-26.54	5.46	22.23	7.87	-18.00	17.01	-0.54
	87.95	70.87	-18.01	-22.77	-20.82	13.73	-57.64	-5.36

PROPULSIVE WING FLOW FIELD

RAKE SUMMARY, RUN 260

PT	ALPHA BETA HEIGHT	VT1 ALP1 BET1	VT2 ALP2 BET2	VT3 ALP3 BET3	VT4 ALP4 BET4	VT5 ALP5 BET5	VT6 ALP6 BET6	VT7 ALP7 BET7
1	-0.01	16.08	37.14	29.02	30.02	30.02	22.30	40.02
	5.01	-24.16	0.56	10.29	2.63	-6.40	25.90	-1.57
	10.38	57.45	-14.15	-21.53	-30.00	5.10	-47.60	-7.20
2	-0.03	14.63	30.54	22.00	30.03	29.86	20.00	41.63
	5.01	-34.50	0.84	10.00	14.24	-10.00	28.32	-1.30
	32.63	58.71	-12.54	-17.13	-37.32	0.54	-33.83	-6.00
3	-0.05	18.16	37.87	32.28	29.57	22.95	22.40	43.60
	5.01	-22.34	0.38	13.25	15.40	-10.30	27.42	-6.50
	65.64	48.77	-14.39	-17.61	-42.61	7.73	-40.18	-6.56
4	0.00	15.00	37.00	32.13	26.23	22.61	22.55	43.50
	5.01	-22.72	0.48	11.57	14.74	-10.00	27.07	-0.52
	87.22	61.20	-15.27	-17.35	-30.51	8.78	-44.35	-6.36

PROPULSIVE WING FLOW FIELD

RAKE SUMMARY, RUN 260

PT	ALPHA BETA HEIGHT	VT1 ALP1 BET1	VT2 ALP2 BET2	VT3 ALP3 BET3	VT4 ALP4 BET4	VT5 ALP5 BET5	VT6 ALP6 BET6	VT7 ALP7 BET7
1	0.05	17.03	36.06	26.02	30.44	30.06	24.30	44.17
	5.01	-23.95	-7.56	-3.11	-15.63	-10.07	0.15	-6.06
	47.50	74.46	-17.07	-21.35	-30.33	6.30	-37.56	-5.02
2	0.03	17.20	37.20	28.20	30.16	30.04	23.22	41.17
	5.01	-20.05	-7.04	0.50	-6.50	-10.25	17.00	-6.00
	65.61	70.02	-16.40	-21.07	-31.42	1.36	-41.27	-7.50
3	0.02	15.06	36.26	27.00	30.20	30.01	24.15	42.07
	5.01	-24.45	-7.50	1.31	-6.22	-10.43	16.50	-6.03
	87.00	64.75	-17.04	-23.02	-31.01	0.30	-43.12	-6.06

PROPULSIVE WING FLOW FIELD

RAKE SUMMARY, RUN 300

PT	ALPHA BETA HEIGHT	VT1 ALP1 BET1	VT2 ALP2 BET2	VT3 ALP3 BET3	VT4 ALP4 BET4	VT5 ALP5 BET5	VT6 ALP6 BET6	VT7 ALP7 BET7
1	8.07	15.00	37.74	27.21	28.78	29.66	28.23	42.01
	0.00	-14.58	-8.78	-1.70	-17.43	-23.02	4.23	-12.74
	47.50	67.23	-17.23	-28.64	-31.10	2.58	-22.35	-9.43
2	8.05	15.05	40.72	26.18	28.02	26.27	28.63	43.00
	0.00	-15.02	-8.21	-5.30	-17.76	-25.05	4.39	-12.85
	95.87	42.70	-13.70	-25.41	-28.90	1.28	-24.88	-8.57
3	8.04	15.38	37.88	27.96	29.46	30.02	27.91	42.40
	0.00	-11.30	-9.85	-1.40	-21.25	-25.32	5.17	-12.87
	87.01	67.39	-17.04	-25.39	-26.22	4.38	-23.65	-9.82

PROPULSIVE WING FLOW FIELD

RAKE SUMMARY, RUN 301

PT	ALPHA BETA HEIGHT	VT1 ALP1 BET1	VT2 ALP2 BET2	VT3 ALP3 BET3	VT4 ALP4 BET4	VT5 ALP5 BET5	VT6 ALP6 BET6	VT7 ALP7 BET7
1	-0.01	18.51	36.24	27.59	30.02	30.00	29.54	43.27
	0.00	-20.13	-0.80	6.94	-11.87	-17.51	8.94	-4.00
	19.15	76.73	-18.56	-27.48	-26.24	0.53	-28.00	-8.94
2	0.03	17.46	36.96	28.48	32.30	31.00	31.04	44.14
	0.00	-33.51	-0.47	6.57	-8.78	-19.05	7.40	-4.05
	32.02	81.31	-18.91	-25.05	-26.46	6.00	-30.88	-8.35
3	-0.00	15.44	36.00	28.14	31.87	33.00	31.00	44.05
	0.00	-21.00	-0.32	6.00	-0.37	-19.53	7.30	-4.04
	65.00	67.97	-18.43	-20.23	-30.17	9.34	-33.34	-7.88
4	0.07	16.35	[illegible]	27.44	30.48	33.66	31.77	44.00
	0.00	-21.37	-2.07	9.71	-9.83	-19.70	8.02	-4.04
	87.00	81.00	-18.77	-20.56	-30.00	9.04	-31.20	-7.70

PROPULSIVE WING FLOW FIELD

RAKE SUMMARY, RUN 362

PT	ALPHA BETA HEIGHT	VT1 ALP1 BET1	VT2 ALP2 BET2	VT3 ALP3 BET3	VT4 ALP4 BET4	VT5 ALP5 BET5	VT6 ALP6 BET6	VT7 ALP7 BET7
2	0.03	87.02	125.70	152.30	160.00	163.00	161.50	166.50
	0.00	16.83	18.39	16.01	13.38	11.20	10.03	7.73
	87.42	-9.84	-9.09	-6.06	-5.82	-5.35	-3.74	-3.51
3	4.06	85.88	116.50	147.00	158.50	157.90	161.30	166.60
	0.00	8.68	13.43	11.33	7.93	5.77	4.72	2.36
	87.32	-5.36	-10.44	-7.11	-6.76	-5.83	-4.49	-4.57
4	8.06	88.78	111.50	139.00	152.50	158.50	161.90	167.20
	0.00	-0.12	6.38	5.06	1.47	-0.28	-1.06	-3.10
	87.68	3.30	-5.27	-8.23	-6.56	-5.80	-4.78	-5.38
5	12.04	87.84	106.20	133.40	150.86	160.40	163.70	166.90
	0.00	-8.52	0.18	0.02	-3.18	-4.79	-5.57	-7.45
	87.75	3.43	0.87	-2.42	-2.64	-3.08	-3.08	-4.66
6	18.07	104.30	111.50	132.60	140.10	144.20	152.90	165.00
	0.00	-17.77	-4.38	-0.83	0.68	1.20	-0.30	-5.61
	81.03	16.42	15.18	14.71	10.25	4.64	-0.97	-5.24
7	22.05	129.70	82.22	75.45	75.67	70.13	57.06	56.00
	0.00	-38.07	-30.71	-14.61	-7.55	-8.77	2.35	9.50
	98.15	12.03	28.71	44.43	51.47	50.40	51.87	9.22

PROPULSIVE WING FLOW FIELD

RAKE SUMMARY, RUN 363

PT	ALPHA BETA HEIGHT	VT1 ALP1 BET1	VT2 ALP2 BET2	VT3 ALP3 BET3	VT4 ALP4 BET4	VT5 ALP5 BET5	VT6 ALP6 BET6	VT7 ALP7 BET7
1	-0.02	133.40	136.40	134.40	131.40	129.60	127.50	133.00
	0.00	37.05	33.61	33.22	30.53	26.88	25.22	18.83
	88.05	-4.83	-9.04	-9.26	-10.99	-10.95	-9.55	-8.96
2	4.05	134.50	137.70	136.10	132.70	130.00	128.60	133.20
	0.00	31.73	29.01	28.74	26.23	22.68	20.88	14.39
	87.40	-2.66	-7.85	-8.30	-10.56	-11.35	-10.42	-10.11
3	8.06	135.60	139.60	138.50	134.00	132.60	130.20	134.30
	0.00	27.26	24.84	25.46	23.50	19.83	18.04	11.13
	87.35	0.25	-4.86	-6.20	-9.60	-11.21	-11.02	-11.07
4	12.06	140.40	144.50	143.90	140.40	138.10	135.20	139.20
	0.00	21.87	20.60	21.38	20.00	16.80	15.37	8.02
	87.06	2.56	-2.66	-4.13	-8.50	-10.44	-11.34	-11.71
5	16.04	142.80	147.90	147.50	144.30	142.30	138.90	142.20
	0.00	16.56	16.07	17.05	16.88	14.35	13.27	5.56
	87.03	5.53	0.63	-1.01	-8.30	-9.28	-11.70	-12.73
6	22.06	146.20	152.00	152.70	150.70	149.70	147.30	148.70
	0.00	9.23	10.53	11.82	12.84	11.04	11.44	4.46
	99.03	0.60	5.52	5.05	0.01	-4.61	-8.50	-12.60

PROPULSIVE WING FLOW FIELD

RAKE SUMMARY, RUN 384

PT	ALPHA BETA HEIGHT	VT1 ALP1 BET1	VT2 ALP2 BET2	VT3 ALP3 BET3	VT4 ALP4 BET4	VT5 ALP5 BET5	VT6 ALP6 BET6	VT7 ALP7 BET7
1	0.02	105.20	108.00	106.80	104.30	102.00	99.97	107.10
	0.00	40.68	35.41	34.84	32.90	28.55	26.83	17.97
	87.07	-4.93	-10.49	-10.25	-13.14	-12.11	-10.31	-9.35
2	4.09	107.10	110.30	109.00	105.70	103.30	100.60	108.00
	0.00	35.95	31.09	31.34	28.51	24.72	23.20	13.73
	87.00	-2.89	-9.36	-9.94	-13.58	-12.88	-11.93	-10.14
3	8.07	110.60	113.50	112.50	108.90	106.60	103.40	110.50
	0.00	30.93	27.73	28.07	26.15	22.31	20.65	10.54
	87.03	0.38	-6.73	-7.74	-11.78	-12.66	-12.63	-10.91
4	12.03	112.20	115.40	115.40	111.90	109.20	105.80	111.30
	0.00	26.20	24.00	24.69	22.91	19.42	17.86	7.92
	87.38	2.96	-4.64	-5.72	-10.48	-11.78	-12.52	-11.79
5	16.07	116.30	120.20	120.20	116.80	114.20	110.50	114.70
	0.00	21.50	19.95	20.61	20.35	17.02	15.39	5.39
	87.11	5.55	-1.67	-3.39	-8.95	-11.90	-13.37	-13.16
6	22.02	121.00	125.40	125.50	123.40	121.60	118.10	121.40
	0.00	14.55	14.94	15.63	16.50	14.51	13.41	3.28
	99.22	10.31	3.55	2.56	-3.40	-8.46	-11.75	-13.68

PROPULSIVE WING FLOW FIELD

RAKE SUMMARY, RUN 385

PT	ALPHA BETA HEIGHT	VT1 ALP1 BET1	VT2 ALP2 BET2	VT3 ALP3 BET3	VT4 ALP4 BET4	VT5 ALP5 BET5	VT6 ALP6 BET6	VT7 ALP7 BET7
1	0.03	77.61	81.34	80.05	77.68	75.20	72.76	83.78
	0.00	45.22	36.52	38.90	34.88	30.65	28.89	16.13
	86.88	-4.50	-13.32	-13.55	-17.30	-14.58	-12.59	-8.94
2	4.03	79.18	82.11	81.58	78.48	76.07	73.40	83.86
	0.00	41.48	34.25	35.60	31.83	27.07	25.68	12.03
	87.23	-2.65	-13.14	-13.16	-17.45	-15.35	-13.69	-6.65
3	8.02	81.23	83.61	83.24	79.54	77.06	73.75	83.81
	0.00	37.22	32.94	34.07	30.28	25.05	23.64	8.92
	87.74	2.03	-10.44	-11.29	-16.52	-15.28	-13.56	-10.78
4	12.06	85.27	88.32	88.06	84.40	80.84	77.57	85.53
	0.00	32.48	27.84	29.13	27.02	22.83	20.79	6.64
	88.56	4.00	-7.32	-8.37	-14.41	-14.60	-14.76	-11.56
5	16.12	87.41	90.54	89.27	86.05	83.13	79.24	88.48
	0.00	29.01	25.33	26.11	24.60	20.40	18.57	3.51
	87.40	5.50	-6.56	-8.28	-14.90	-16.73	-17.09	-13.33
6	22.09	95.15	98.77	98.14	95.02	92.36	88.49	93.48
	0.00	21.66	19.54	21.00	20.84	17.76	16.03	1.20
	99.57	10.61	-0.51	-2.23	-10.17	-13.25	-16.34	-14.64

PROPULSIVE WING FLOW FIELD

RAKE SUMMARY, RUN 366

PT	ALPHA BETA HEIGHT	VT1 ALP1 BET1	VT2 ALP2 BET2	VT3 ALP3 BET3	VT4 ALP4 BET4	VT5 ALP5 BET5	VT6 ALP6 BET6	VT7 ALP7 BET7
1	0.05	37.64	45.42	45.88	44.88	41.07	37.40	57.25
	0.00	53.79	30.19	42.31	39.11	33.03	36.63	7.78
	87.54	-7.35	-19.36	-20.81	-31.15	-21.62	-18.34	-5.29
2	4.02	39.29	45.27	46.21	44.99	41.38	37.70	55.16
	0.00	52.31	28.52	35.77	38.74	30.00	31.99	3.87
	87.24	-7.46	-21.53	-19.36	-32.11	-26.83	-19.60	-8.61
3	8.08	39.85	44.72	46.49	44.76	41.08	37.53	56.09
	0.00	51.72	29.72	36.28	32.41	27.73	30.12	-0.34
	87.02	-1.12	-23.42	-21.52	-32.72	-26.34	-22.29	-8.62
4	12.03	42.99	46.30	47.28	45.53	43.14	39.17	56.97
	0.00	47.18	29.41	34.73	31.76	25.37	28.51	-3.31
	87.85	3.87	-23.48	-24.43	-30.93	-28.27	-25.41	-8.31
5	16.11	46.60	49.61	50.72	48.43	45.38	41.29	56.31
	0.00	40.31	27.78	31.13	28.48	22.88	24.42	-5.15
	87.11	6.93	-21.39	-21.01	-27.29	-25.88	-21.74	-10.58
6	21.98	52.22	54.22	55.79	53.49	50.05	46.00	57.92
	0.00	37.04	25.27	27.15	25.16	19.47	19.71	-8.83
	99.22	5.98	-20.87	-21.15	-30.33	-28.98	-27.73	-12.75

PROPULSIVE WING FLOW FIELD

RAKE SUMMARY, RUN 367

PT	ALPHA BETA HEIGHT	VT1 ALP1 BET1	VT2 ALP2 BET2	VT3 ALP3 BET3	VT4 ALP4 BET4	VT5 ALP5 BET5	VT6 ALP6 BET6	VT7 ALP7 BET7
27	0.01	53.33	64.37	61.40	57.17	54.27	52.83	57.51
	0.00	53.35	29.08	38.06	34.61	32.63	30.13	18.61
	88.36	-1.24	-13.10	-17.40	-29.12	-15.33	-18.64	-11.19
28	4.02	55.10	65.61	62.65	58.87	55.13	52.88	61.28
	0.00	48.85	25.34	46.23	30.82	29.68	26.83	12.01
	88.45	0.81	-12.94	-17.87	-31.04	-18.41	-20.84	-10.57
29	8.02	57.17	65.58	63.59	59.41	55.66	53.10	58.83
	0.00	46.64	23.73	34.60	29.60	26.99	24.32	9.26
	88.81	7.08	-12.77	-17.30	-31.29	-18.88	-22.01	-12.74
30	12.00	59.29	66.46	65.74	60.65	56.41	53.60	59.70
	0.00	41.02	21.70	31.38	27.44	25.27	22.74	5.87
	87.62	11.34	-11.06	-15.27	-30.56	-18.88	-22.98	-12.98
31	16.01	61.74	68.64	66.57	63.38	58.83	55.70	61.82
	0.00	36.40	18.93	28.92	24.79	22.59	19.40	2.59
	88.61	10.28	-10.78	-15.97	-29.62	-17.94	-23.81	-13.91
32	21.99	68.21	73.84	73.98	69.71	64.86	61.40	63.73
	0.00	31.31	16.78	25.21	20.94	19.40	16.39	0.06
	99.32	13.79	-9.50	-14.05	-29.71	-19.29	-26.08	-17.30

PROPULSIVE WING FLOW FIELD

RAKE SUMMARY, RUN 380

PT	ALPHA BETA HEIGHT	VT1 ALP1 BET1	VT2 ALP2 BET2	VT3 ALP3 BET3	VT4 ALP4 BET4	VT5 ALP5 BET5	VT6 ALP6 BET6	VT7 ALP7 BET7
2	0.01	96.43	128.50	156.70	154.80	159.10	161.20	168.00
	0.00	12.67	16.28	19.39	21.03	19.80	16.13	10.06
	85.38	7.41	0.96	1.72	-2.13	-6.87	-9.47	-9.11
3	4.04	94.49	124.00	147.10	157.10	158.20	143.60	156.30
	0.00	5.15	9.03	12.16	12.37	16.75	23.06	13.80
	87.71	9.98	5.00	6.58	7.52	10.17	-1.18	-14.45
4	8.02	93.55	120.10	143.50	158.00	164.10	160.80	135.10
	0.00	-0.19	8.00	7.45	5.01	4.73	7.35	11.76
	87.82	10.84	6.59	7.54	7.17	11.34	15.74	15.06
5	12.05	101.70	123.00	143.00	153.20	162.60	164.80	156.40
	0.00	-6.34	0.61	2.88	-0.48	-2.28	-2.55	-4.08
	89.06	12.84	10.22	10.13	8.13	11.04	14.42	17.86
6	16.00	99.48	118.40	136.70	148.50	159.50	163.30	161.80
	0.00	-12.76	-4.48	-1.72	-4.82	-6.86	-7.05	-11.14
	87.44	14.46	13.06	13.31	10.31	12.11	14.12	15.58
7	22.62	112.30	132.10	143.10	143.90	146.70	144.40	142.20
	0.00	-18.99	-11.21	-8.71	-11.11	-12.80	-13.82	-16.56
	94.64	17.72	17.31	20.92	17.95	16.40	13.96	9.82

PROPULSIVE WING FLOW FIELD

RAKE SUMMARY, RUN 370

PT	ALPHA BETA HEIGHT	VT1 ALP1 BET1	VT2 ALP2 BET2	VT3 ALP3 BET3	VT4 ALP4 BET4	VT5 ALP5 BET5	VT6 ALP6 BET6	VT7 ALP7 BET7
1	0.02	143.30	149.00	145.90	140.90	140.40	138.50	143.00
	0.00	37.47	30.83	31.00	27.80	24.26	22.80	17.22
	86.33	-8.38	-10.75	-11.60	-14.38	-11.82	-11.51	-10.02
2	4.02	153.70	157.10	154.40	149.10	147.40	144.80	147.70
	0.00	35.20	31.77	31.80	27.94	23.43	20.80	14.29
	83.85	4.68	-5.42	-9.53	-15.72	-14.35	-14.76	-12.72
3	7.99	161.30	165.70	163.60	158.80	154.00	149.80	151.40
	0.00	30.95	31.85	33.00	33.12	29.03	25.84	18.97
	85.82	18.04	7.68	3.82	-6.22	-10.45	-15.37	-15.42
4	12.04	170.90	175.80	175.50	168.80	168.00	165.50	167.20
	0.00	29.50	31.99	33.62	33.57	28.47	24.48	18.22
	88.97	21.31	9.36	5.26	-5.51	-11.47	-17.16	-18.22
5	16.01	175.00	182.80	182.40	177.30	176.40	173.70	174.80
	0.00	23.99	28.34	31.48	35.01	32.63	29.98	19.12
	87.22	26.80	16.98	16.75	6.90	0.20	-8.13	-14.61
6	21.99	154.70	159.20	160.70	125.90	115.10	101.10	87.00
	0.00	17.27	21.27	23.14	28.30	26.76	34.58	31.22
	93.04	33.91	28.06	35.72	37.63	39.84	35.80	12.50

PROPULSIVE WING FLOW FIELD

RAKE SUMMARY, RUN 371

PT	ALPHA BETA HEIGHT	VT1 ALP1 BET1	VT2 ALP2 BET2	VT3 ALP3 BET3	VT4 ALP4 BET4	VT5 ALP5 BET5	VT6 ALP6 BET6	VT7 ALP7 BET7
1	0.00	101.40	100.00	106.80	102.80	101.40	99.25	104.40
	0.00	39.37	30.81	33.23	29.78	26.83	25.22	17.83
	87.47	-8.29	-12.15	-13.48	-18.03	-13.28	-13.61	-10.70
2	4.03	110.40	116.80	113.50	108.20	105.50	102.80	108.20
	0.00	39.38	30.57	32.58	29.08	25.51	23.12	15.31
	87.25	-5.02	-12.54	-14.05	-20.37	-15.50	-16.37	-13.11
3	8.02	119.60	124.90	124.00	120.80	119.30	115.80	115.30
	0.00	38.17	31.92	32.25	27.83	23.52	20.40	13.50
	87.12	5.78	-7.54	-11.52	-18.47	-16.20	-17.76	-16.03
4	12.02	122.20	122.80	121.70	117.70	116.40	113.40	116.50
	0.00	35.98	35.09	36.42	32.98	27.27	23.03	12.92
	86.04	21.01	1.68	-8.00	-18.17	-18.51	-21.90	-16.62
5	16.03	132.90	136.00	132.80	126.40	124.70	123.10	124.80
	0.00	27.65	29.34	32.80	34.62	30.84	28.13	17.81
	86.76	24.57	12.07	10.30	-1.71	-6.95	-15.57	-17.98
6	22.05	124.80	127.00	123.80	113.40	107.70	100.90	97.57
	0.00	22.50	24.32	28.91	35.55	34.83	37.80	24.57
	96.38	26.40	15.62	20.48	14.58	18.51	6.65	-4.10

PROPULSIVE WING FLOW FIELD

RAKE SUMMARY, RUN 372

PT	ALPHA BETA HEIGHT	VT1 ALP1 BET1	VT2 ALP2 BET2	VT3 ALP3 BET3	VT4 ALP4 BET4	VT5 ALP5 BET5	VT6 ALP6 BET6	VT7 ALP7 BET7
1	-0.01	71.77	81.38	79.88	75.27	72.82	71.23	77.12
	0.00	44.83	30.15	35.38	31.00	28.59	26.33	17.21
	85.98	-8.31	-14.80	-17.34	-24.71	-15.40	-15.85	-10.86
2	4.00	76.17	84.28	82.50	78.41	75.20	72.32	78.88
	0.00	44.71	29.13	33.70	29.78	27.27	25.14	14.93
	87.17	-8.34	-15.41	-18.48	-26.26	-17.84	-19.05	-13.55
3	8.00	81.86	86.06	86.87	82.86	78.86	75.30	79.70
	0.00	42.50	29.85	33.41	29.83	27.13	24.83	12.85
	86.13	-4.58	-14.73	-17.57	-26.57	-18.81	-21.71	-14.74
4	12.03	92.45	94.72	89.46	84.40	81.15	86.58	87.33
	0.00	38.63	28.07	28.83	26.75	23.91	21.44	11.85
	86.84	-0.52	-12.58	-15.18	-23.54	-18.94	-21.90	-17.46
5	16.05	93.25	96.86	99.43	95.96	94.84	93.35	97.84
	0.00	38.82	31.48	30.95	26.71	22.04	17.74	7.12
	88.07	13.35	-10.52	-15.29	-25.21	-21.38	-23.83	-18.44
6	21.07	94.81	96.12	96.12	92.03	91.90	91.01	93.00
	0.00	25.85	25.84	31.28	34.21	28.12	27.53	14.76
	97.85	32.54	12.74	12.48	-5.04	-5.82	-16.87	-17.94

PROPULSIVE WING FLOW FIELD

RAKE SUMMARY, RUN 373

PT	ALPHA BETA HEIGHT	VT1 ALP1 BET1	VT2 ALP2 BET2	VT3 ALP3 BET3	VT4 ALP4 BET4	VT5 ALP5 BET5	VT6 ALP6 BET6	VT7 ALP7 BET7
1	0.03	53.05	63.80	62.43	58.40	54.83	52.70	58.30
	0.00	55.14	27.91	37.74	32.30	31.77	29.68	16.75
	87.22	-16.85	-17.95	-22.24	-33.01	-18.18	-21.32	-11.48
2	4.00	53.82	63.78	61.55	58.14	54.68	52.98	55.47
	0.00	49.16	24.36	34.24	27.64	26.68	23.67	11.87
	85.57	-10.16	-16.73	-22.77	-34.36	-19.19	-22.01	-12.87
3	8.00	56.37	62.94	64.15	60.14	54.72	52.79	56.10
	0.00	47.21	28.01	31.58	25.71	26.30	22.28	10.07
	85.16	-9.12	-20.56	-23.68	-35.19	-23.85	-26.09	-16.81
4	11.98	61.21	66.37	67.13	63.37	58.96	58.23	57.24
	0.00	45.18	24.86	31.68	25.74	25.52	21.40	10.08
	86.14	-7.53	-19.32	-24.06	-35.59	-24.00	-26.82	-18.86
5	16.03	67.86	72.54	73.00	69.52	65.76	61.79	61.31
	0.00	40.31	24.31	31.08	28.69	25.31	22.84	11.05
	87.01	0.28	-14.87	-19.75	-32.20	-22.68	-26.91	-20.18
6	21.99	78.35	81.54	84.30	81.07	78.24	75.14	74.18
	0.00	36.20	24.38	28.05	23.96	20.52	17.87	7.28
	98.54	12.59	-11.09	-16.63	-28.80	-22.77	-27.66	-23.07

PROPULSIVE WING FLOW FIELD

RAKE SUMMARY, RUN 374

PT	ALPHA BETA HEIGHT	VT1 ALP1 BET1	VT2 ALP2 BET2	VT3 ALP3 BET3	VT4 ALP4 BET4	VT5 ALP5 BET5	VT6 ALP6 BET6	VT7 ALP7 BET7
1	-0.01	34.82	48.38	45.16	43.23	37.78	35.86	41.14
	0.00	64.80	21.23	35.92	27.36	34.10	30.60	15.40
	87.98	-5.80	-15.49	-22.07	-42.31	-19.99	-25.45	-13.20
2	3.98	39.07	49.33	46.23	45.35	40.27	38.25	44.32
	0.00	57.12	20.54	32.85	26.47	30.30	27.58	16.72
	87.30	-27.37	-19.15	-24.73	-43.40	-21.81	-27.38	-13.94
3	7.98	40.27	48.40	47.80	46.25	40.05	37.85	44.42
	0.00	59.87	18.12	32.56	20.19	25.00	23.90	5.43
	87.06	-23.00	-18.06	-28.30	-44.18	-23.41	-33.87	-14.35
4	12.05	42.22	48.30	48.73	46.75	40.78	38.89	43.14
	0.00	53.05	14.50	26.52	16.34	20.23	18.90	2.82
	87.76	-24.53	-21.06	-28.02	-45.35	-26.01	-32.76	-17.37
5	18.04	49.53	53.23	54.20	51.80	46.49	43.94	44.85
	0.00	48.25	17.39	27.37	18.11	20.61	18.31	4.58
	85.77	-17.90	-22.82	-30.33	-44.46	-28.07	-31.41	-21.86
6	22.07	50.60	52.98	54.86	52.48	47.34	45.08	43.60
	0.00	43.47	16.28	25.51	18.72	19.97	18.29	3.85
	99.07	2.80	-20.71	-28.18	-46.88	-32.34	-38.75	-28.57

PROPULSIVE WING FLOW FIELD

RAKE SUMMARY, RUN 375

PT	ALPHA BETA HEIGHT	VT1 ALP1 BET1	VT2 ALP2 BET2	VT3 ALP3 BET3	VT4 ALP4 BET4	VT5 ALP5 BET5	VT6 ALP6 BET6	VT7 ALP7 BET7
2	-0.03	96.79	119.20	144.80	154.40	154.50	158.70	155.40
	0.00	10.48	16.09	16.51	18.90	21.58	18.32	14.09
	18.75	7.19	6.62	4.84	4.42	-2.97	-8.27	-11.12
3	-0.07	96.91	119.30	148.40	154.10	156.80	160.60	157.80
	0.00	11.97	17.02	17.43	20.41	21.23	17.42	13.34
	32.82	5.00	4.37	3.53	2.32	-5.58	-2.29	-10.67
4	-0.03	96.85	121.70	148.00	154.80	158.10	161.40	157.90
	0.00	13.97	18.01	18.17	20.81	20.28	18.43	12.83
	85.78	4.18	2.81	2.54	0.40	-6.87	-9.03	-9.99
5	0.03	94.98	120.50	148.00	154.60	158.30	162.00	158.90
	0.00	13.74	17.73	18.27	20.62	19.97	18.15	12.58
	87.32	3.62	3.11	2.85	0.07	-6.91	-8.88	-9.77

PROPULSIVE WING FLOW FIELD

RAKE SUMMARY, RUN 376

PT	ALPHA BETA HEIGHT	VT1 ALP1 BET1	VT2 ALP2 BET2	VT3 ALP3 BET3	VT4 ALP4 BET4	VT5 ALP5 BET5	VT6 ALP6 BET6	VT7 ALP7 BET7
1	0.02	78.86	98.86	121.00	128.30	128.00	131.90	128.40
	0.00	9.75	15.72	16.00	18.77	21.48	18.07	13.91
	19.22	6.70	7.03	4.79	4.71	-2.87	-8.19	-11.17
2	0.00	79.29	98.62	122.40	128.00	129.40	134.00	129.60
	0.00	12.33	16.73	17.02	19.95	21.10	17.00	13.44
	32.82	3.94	4.58	4.07	2.00	-5.05	-9.10	-10.86
3	-0.03	80.05	103.30	123.70	128.40	130.80	134.70	129.90
	0.00	13.96	17.64	17.97	20.40	20.27	18.18	12.96
	85.83	3.57	2.00	2.75	0.43	-7.00	-8.87	-10.10
4	-0.02	80.52	102.20	123.00	129.00	131.10	134.40	130.10
	0.00	14.07	17.52	17.77	20.30	19.92	15.96	12.00
	88.07	2.88	2.71	2.56	0.15	-7.20	-8.83	-9.84

PROPULSIVE WING FLOW FIELD

RAKE SUMMARY, RUN 377

PT	ALPHA BETA HEIGHT	VT1 ALP1 BET1	VT2 ALP2 BET2	VT3 ALP3 BET3	VT4 ALP4 BET4	VT5 ALP5 BET5	VT6 ALP6 BET6	VT7 ALP7 BET7
1	-0.03	54.06	87.48	84.84	88.58	88.68	92.52	88.73
	0.00	10.83	16.95	14.67	18.10	21.61	17.95	14.91
	10.29	5.44	7.55	4.47	5.26	-3.06	-8.27	-11.05
2	0.02	55.83	70.80	85.14	89.48	89.59	93.81	85.73
	0.00	14.28	16.24	16.18	18.98	21.29	18.90	15.14
	32.77	0.73	4.59	4.43	4.23	-5.35	-8.73	-12.03
3	0.00	55.60	71.07	88.78	90.64	90.17	94.15	86.90
	0.00	16.46	18.52	18.29	19.81	20.56	18.07	14.21
	65.50	1.36	3.37	2.97	2.27	-6.45	-8.67	-10.75
4	-0.02	55.95	71.15	88.91	88.38	90.43	93.87	87.13
	0.00	15.25	17.66	16.80	19.71	20.03	15.76	13.93
	87.30	0.39	3.44	2.93	1.75	-6.98	-8.59	-10.47

PROPULSIVE WING FLOW FIELD

RAKE SUMMARY, RUN 378

PT	ALPHA BETA HEIGHT	VT1 ALP1 BET1	VT2 ALP2 BET2	VT3 ALP3 BET3	VT4 ALP4 BET4	VT5 ALP5 BET5	VT6 ALP6 BET6	VT7 ALP7 BET7
1	0.00	38.55	45.72	80.85	84.16	88.98	84.19	85.14
	0.00	14.38	18.57	12.49	15.84	22.21	18.25	18.58
	10.51	1.10	9.38	4.00	7.83	-1.60	-7.07	-13.84
2	-0.02	38.77	48.03	81.23	82.83	81.38	85.20	84.84
	0.00	17.11	18.87	14.25	17.81	21.88	18.95	18.47
	32.52	-3.20	6.20	3.87	6.31	-5.18	-8.58	-13.88
3	-0.02	38.76	48.58	81.21	82.47	81.31	85.32	84.60
	0.00	19.07	18.72	14.11	18.08	21.38	18.38	18.39
	65.71	-5.38	4.08	3.22	4.58	-6.90	-8.24	-13.61
4	0.02	37.51	50.20	82.58	81.87	80.86	85.05	83.98
	0.00	22.23	18.51	14.46	18.37	21.05	15.77	18.18
	87.40	-5.04	4.39	2.49	4.98	-6.88	-7.45	-13.19

PROPULSIVE WING FLOW FIELD

RAKE SUMMARY, RUN 379

PT	ALPHA BETA HEIGHT	VT1 ALP1 BET1	VT2 ALP2 BET2	VT3 ALP3 BET3	VT4 ALP4 BET4	VT5 ALP5 BET5	VT6 ALP6 BET6	VT7 ALP7 BET7
2	0.01	41.41	41.51	43.08	41.11	40.37	44.76	34.47
	0.00	40.08	35.25	22.98	22.73	28.58	21.60	58.60
	10.27	-23.87	-1.31	1.03	13.15	-0.79	1.59	-2.15
3	-0.02	49.01	48.58	47.42	45.21	44.47	47.05	39.74
	0.00	48.27	47.35	28.80	31.01	35.48	27.95	51.02
	32.73	-20.44	-10.82	-7.71	1.11	-11.80	-7.06	-18.93
4	0.01	58.96	54.68	52.00	48.96	50.33	50.83	45.51
	0.00	47.35	45.57	32.68	36.39	37.34	31.21	48.81
	65.85	-32.94	-24.40	-17.10	-8.83	-18.84	-12.94	-27.81
5	-0.01	58.83	54.84	51.29	50.59	50.87	51.75	45.51
	0.00	45.75	43.46	34.82	34.50	35.58	29.75	47.64
	86.98	-29.16	-21.09	-17.63	-9.27	-17.87	-12.31	-27.92

PROPULSIVE WING FLOW FIELD

RAKE SUMMARY, RUN 300

PT	ALPHA BETA HEIGHT	VT1 ALP1 BET1	VT2 ALP2 BET2	VT3 ALP3 BET3	VT4 ALP4 BET4	VT5 ALP5 BET5	VT6 ALP6 BET6	VT7 ALP7 BET7
1	-0.01	35.37	33.26	33.13	34.00	29.73	34.04	32.36
	0.00	45.77	51.02	24.26	22.86	41.20	26.80	72.75
	10.43	-31.19	2.07	3.06	22.92	3.11	2.79	-0.06
2	0.00	37.80	33.02	36.78	32.67	33.43	34.06	33.46
	0.00	49.00	51.30	22.42	32.45	41.18	33.86	85.82
	32.73	-37.14	-10.02	-5.77	15.70	-12.51	-5.00	-24.95
3	-0.03	41.81	36.03	34.03	35.00	35.72	36.98	36.06
	0.00	45.81	51.82	32.45	35.37	42.36	31.80	63.75
	65.76	-35.66	-23.15	-15.55	4.73	-20.56	-11.14	-45.86
4	-0.01	42.82	38.38	35.90	33.85	36.53	37.15	37.39
	0.00	47.33	49.87	26.37	37.57	41.42	32.51	61.40
	87.10	-40.32	-22.76	-14.40	4.85	-19.05	-9.85	-41.23

PROPULSIVE WING FLOW FIELD

RAKE SUMMARY. RUN 381

PT	ALPHA BETA HEIGHT	VT1 ALP1 BET1	VT2 ALP2 BET2	VT3 ALP3 BET3	VT4 ALP4 BET4	VT5 ALP5 BET5	VT6 ALP6 BET6	VT7 ALP7 BET7
1	-0.01	57.50	58.82	60.68	60.18	58.78	62.20	51.88
	0.00	34.96	33.45	25.05	24.23	25.53	21.01	28.71
	19.01	-8.28	0.20	0.96	6.11	-1.17	-1.35	-4.24
2	0.03	89.70	88.09	85.50	84.38	84.82	86.24	58.02
	0.00	45.29	40.78	33.22	31.74	31.07	26.66	32.91
	32.98	-12.15	-9.28	-9.51	-4.85	-10.27	-8.44	-12.82
3	0.00	75.74	74.22	71.78	69.37	70.35	71.07	62.66
	0.00	43.79	39.85	33.35	33.07	30.98	27.01	32.90
	65.57	-17.67	-15.78	-14.91	-11.12	-15.61	-11.96	-17.06
4	0.03	75.68	73.79	72.02	69.76	70.39	70.86	62.79
	0.00	43.48	41.03	32.81	32.62	31.04	27.48	32.76
	87.19	-18.28	-16.70	-14.88	-11.30	-16.15	-12.47	-17.60

PROPULSIVE WING FLOW FIELD

RAKE SUMMARY. RUN 382

PT	ALPHA BETA HEIGHT	VT1 ALP1 BET1	VT2 ALP2 BET2	VT3 ALP3 BET3	VT4 ALP4 BET4	VT5 ALP5 BET5	VT6 ALP6 BET6	VT7 ALP7 BET7
1	0.01	82.02	84.58	88.83	86.00	86.43	88.97	82.27
	0.00	32.84	31.30	25.92	24.52	22.93	19.91	20.82
	18.53	-1.06	2.07	2.02	3.06	-1.58	-1.05	-4.55
2	-0.01	100.10	98.64	96.41	95.83	95.81	96.41	86.73
	0.00	40.06	37.34	31.57	30.19	28.01	24.94	25.04
	32.86	-5.73	-6.71	-7.16	-8.29	-9.87	-8.56	-10.99
3	-0.01	104.80	103.20	102.00	100.00	99.83	99.27	92.85
	0.00	39.50	37.21	32.18	30.39	28.40	25.84	25.84
	65.67	-11.73	-12.92	-12.38	-11.14	-13.26	-11.41	-13.29
4	-0.03	103.90	102.40	102.00	99.58	99.05	98.74	92.43
	0.00	39.85	37.37	31.74	30.27	28.46	25.34	25.82
	87.09	-11.86	-13.14	-12.28	-11.04	-13.38	-11.45	-13.38

PROPULSIVE WING FLOW FIELD

RAKE SUMMARY. RUN 383

PT	ALPHA BETA HEIGHT	VT1 ALP1 BET1	VT2 ALP2 BET2	VT3 ALP3 BET3	VT4 ALP4 BET4	VT5 ALP5 BET5	VT6 ALP6 BET6	VT7 ALP7 BET7
1	0.02	122.50	127.70	129.30	127.80	128.80	131.10	126.80
	0.00	32.00	31.36	28.14	25.88	23.16	20.54	19.20
	17.50	3.29	1.80	0.52	-0.75	-3.80	-3.75	-5.80
2	-0.08	143.30	141.30	139.30	135.50	136.10	138.90	132.20
	0.00	38.11	34.78	30.38	27.85	24.72	22.39	20.85
	32.80	-3.73	-6.65	-7.58	-8.14	-9.91	-8.86	-10.28
3	0.01	146.80	144.00	142.70	139.30	138.70	140.10	134.70
	0.00	37.31	34.40	29.99	27.85	24.77	22.58	21.30
	66.14	-8.76	-10.71	-10.58	-10.10	-11.29	-9.88	-11.15
4	-0.04	146.30	144.90	143.50	140.30	140.10	140.60	133.90
	0.00	37.27	33.91	30.00	28.10	25.48	23.23	22.54
	92.55	-9.83	-10.95	-10.73	-10.45	-11.95	-10.33	-11.86

PROPULSIVE WING FLOW FIELD

RAKE SUMMARY. RUN 387

PT	ALPHA BETA HEIGHT	VT1 ALP1 BET1	VT2 ALP2 BET2	VT3 ALP3 BET3	VT4 ALP4 BET4	VT5 ALP5 BET5	VT6 ALP6 BET6	VT7 ALP7 BET7
2	-0.01	133.30	139.30	137.50	128.90	113.10	94.50	85.83
	0.00	-8.03	-7.01	-7.39	-8.75	-11.87	-10.38	-5.39
	87.48	7.74	5.28	5.90	4.42	5.37	8.09	8.19
3	4.04	139.90	145.90	142.60	138.80	120.70	102.30	95.96
	0.00	-18.77	-18.88	-18.45	-18.23	-17.14	-13.64	-8.72
	87.42	10.20	7.32	4.21	0.49	-0.83	-1.72	-1.07
4	12.05	140.80	147.70	153.80	154.50	138.80	124.50	114.10
	0.00	-47.48	-42.45	-34.62	-29.88	-27.13	-22.87	-16.19
	87.58	0.77	-9.18	-14.03	-14.74	-14.27	-14.28	-11.20

PROPULSIVE WING FLOW FIELD

RAKE SUMMARY, RUN 388

PT	ALPHA BETA HEIGHT	VT1 ALP1 BET1	VT2 ALP2 BET2	VT3 ALP3 BET3	VT4 ALP4 BET4	VT5 ALP5 BET5	VT6 ALP6 BET6	VT7 ALP7 BET7
1	0.01	97.51	102.80	99.81	100.70	95.29	88.68	78.84
	0.00	-11.42	-10.16	-11.38	-14.86	-16.71	-17.10	-15.54
	87.04	9.45	7.74	9.34	8.41	9.54	11.99	15.38
2	4.06	97.38	102.90	101.90	101.80	98.82	93.63	82.19
	0.00	-19.39	-18.73	-20.62	-23.82	-24.72	-23.22	-21.95
	86.72	12.19	10.33	10.13	7.87	7.00	7.62	10.07
3	12.10	85.44	92.90	100.20	103.60	97.33	90.05	84.61
	0.00	-46.31	-37.87	-34.18	-30.01	-27.51	-25.34	-19.20
	87.92	0.27	-8.60	-12.81	-13.77	-13.69	-12.55	-7.24

PROPULSIVE WING FLOW FIELD

RAKE SUMMARY, RUN 389

PT	ALPHA BETA HEIGHT	VT1 ALP1 BET1	VT2 ALP2 BET2	VT3 ALP3 BET3	VT4 ALP4 BET4	VT5 ALP5 BET5	VT6 ALP6 BET6	VT7 ALP7 BET7
1	0.02	70.90	74.43	71.46	73.14	70.51	72.80	71.58
	0.00	-13.35	-12.21	-13.95	-16.61	-18.80	-18.67	-18.38
	88.95	11.01	8.10	10.45	9.70	13.96	14.53	17.38
2	4.02	70.88	74.86	71.78	73.39	70.85	67.45	65.76
	0.00	-16.57	-15.58	-16.18	-20.39	-21.67	-20.13	-17.21
	87.63	13.88	11.27	13.75	11.23	11.88	12.38	16.44
3	12.04	71.50	72.29	67.68	71.88	88.55	88.70	93.88
	0.00	-37.75	-35.80	-35.31	-35.15	-33.93	-30.07	-28.12
	86.95	15.29	8.53	2.23	-3.07	-4.18	-2.13	1.16

PROPULSIVE WING FLOW FIELD

RAKE SUMMARY, RUN 301

PT	ALPHA / BETA / HEIGHT	VT1 / ALP1 / BET1	VT2 / ALP2 / BET2	VT3 / ALP3 / BET3	VT4 / ALP4 / BET4	VT5 / ALP5 / BET5	VT6 / ALP6 / BET6	VT7 / ALP7 / BET7
3	0.02	**********	**********	**********	**********	88450.00	**********	**********
	0.00	-1.01	-4.78	0.87	0.41	88.32	-2.91	89.99
	87.05	-4.36	-1.44	0.46	-0.53	-71.48	-33.41	36.83
4	0.03	**********	**********	**********	**********	70150.00	**********	**********
	0.00	-1.02	-4.65	0.86	0.42	87.97	-2.83	90.09
	84.07	-4.17	-1.39	0.46	-0.53	-82.46	-33.46	44.94
5	0.03	**********	**********	**********	**********	70310.00	**********	**********
	0.00	-1.04	-4.72	0.86	0.43	87.48	-2.85	90.32
	81.08	-3.86	-1.33	0.48	-0.53	-86.27	-33.44	61.60
6	0.03	**********	**********	**********	**********	70510.00	**********	**********
	0.00	-1.05	-4.97	0.86	0.44	90.33	-2.71	97.91
	78.09	-3.55	-1.23	0.49	-0.53	-63.81	-33.53	88.46
7	0.04	**********	**********	**********	**********	71370.00	**********	**********
	0.00	-1.07	-5.33	0.85	0.45	85.58	-2.64	-89.16
	75.08	-3.17	-1.08	0.50	-0.54	16.47	-33.58	36.94
9	0.01	130.40	135.40	136.80	134.50	135.50	134.80	137.80
	0.00	3.78	2.74	3.14	2.51	3.14	3.28	2.87
	18.86	1.87	0.88	0.79	1.57	2.06	1.26	1.48
10	0.02	131.20	136.90	137.10	135.20	134.30	135.40	139.80
	0.00	3.71	1.21	0.66	-1.89	-1.95	-2.33	-2.27
	57.07	6.42	5.80	5.80	5.76	4.40	3.34	2.89
11	0.02	131.20	136.30	136.30	134.70	133.80	134.80	139.70
	0.00	5.93	2.30	0.02	-3.93	-4.27	-4.50	-4.06
	59.98	8.02	8.58	9.66	7.91	5.44	3.63	2.62
12	0.02	134.70	130.50	111.50	141.40	133.50	134.70	139.70
	0.00	11.52	13.98	-8.01	-14.11	-8.54	-7.35	-6.29
	62.96	8.55	14.39	21.81	10.56	5.06	3.10	2.25
13	0.02	135.50	130.10	121.90	138.80	132.50	130.20	131.60
	0.00	12.59	14.21	-1.25	-14.02	-10.03	-9.95	-8.03
	66.00	0.66	-5.48	-13.20	-0.84	2.87	2.71	2.52
14	0.02	132.80	139.00	130.80	119.70	116.80	111.90	114.90
	0.00	8.09	6.61	2.99	-3.18	-6.82	-8.66	-7.89
	69.00	-2.95	-5.94	-7.24	-4.53	-1.49	0.81	2.49
15	0.01	132.10	137.80	137.50	134.90	132.50	128.30	127.80
	0.00	5.74	3.99	2.56	-0.17	-1.85	-3.84	-4.59
	71.98	-2.72	-4.35	-5.92	-5.35	-3.34	-0.77	2.33
16	0.02	130.50	137.20	136.10	135.00	134.20	133.20	138.80
	0.00	4.44	2.78	2.10	0.27	-0.16	-1.19	-1.90
	75.04	-1.94	-2.92	-3.86	-3.02	-2.27	-2.07	0.07
17	0.01	131.40	135.20	136.30	133.40	134.30	132.80	138.20
	0.00	3.97	2.35	1.93	0.53	0.87	0.18	-0.15
	78.02	-1.15	-1.95	-2.48	-1.37	-1.01	-1.02	0.26
18	0.00	130.40	136.00	135.80	133.50	133.70	133.10	138.00
	0.00	3.61	2.07	2.07	0.74	1.27	0.98	0.53
	81.01	-0.55	-1.32	-1.62	-0.75	-0.57	-0.68	0.45
19	0.00	129.90	135.50	135.30	133.50	133.40	133.20	138.10
	0.00	3.45	2.01	2.15	1.02	1.52	1.42	1.10
	83.99	-0.11	-0.89	-1.01	-0.22	-0.28	-0.18	0.68
20	0.00	129.90	134.40	135.50	133.40	133.70	133.40	138.10
	0.00	3.34	2.01	2.22	1.33	1.82	1.79	1.43
	86.98	0.18	-0.53	-0.77	0.19	0.07	0.07	0.79

PROPULSIVE WING FLOW FIELD

RAKE SUMMARY, RUN 302

PT	ALPHA / BETA / HEIGHT	VT1 / ALP1 / BET1	VT2 / ALP2 / BET2	VT3 / ALP3 / BET3	VT4 / ALP4 / BET4	VT5 / ALP5 / BET5	VT6 / ALP6 / BET6	VT7 / ALP7 / BET7
1	-0.01	89.78	92.56	90.78	88.28	92.33	87.33	92.68
	0.00	3.54	0.38	-1.90	-4.82	-3.33	-6.50	-7.49
	88.99	-9.20	-10.38	-10.46	-8.95	-5.00	-8.82	-5.90
2	-0.02	93.52	98.87	98.58	97.56	98.00	98.77	101.20
	0.00	-2.22	-4.81	-7.78	-11.95	-11.46	-14.21	-14.03
	58.99	15.67	13.78	12.79	12.56	8.81	7.06	4.32
3	-0.01	95.78	99.29	100.10	98.83	94.48	97.56	101.90
	0.00	-0.50	-4.80	-9.45	-15.17	-17.66	-19.81	-19.40
	59.98	19.23	18.72	17.27	16.86	11.49	8.97	4.59
4	-0.01	99.19	102.90	104.30	103.50	95.78	101.00	104.90
	0.00	4.18	-1.34	-10.28	-20.88	-25.80	-27.05	-26.45
	83.05	23.83	25.40	26.34	24.49	16.34	11.90	6.62
5	-0.01	106.60	127.10	144.40	141.00	105.40	108.20	109.50
	0.00	14.89	8.77	-7.48	-26.45	-41.36	-36.41	-32.49
	68.07	25.60	29.82	33.01	31.57	17.02	12.58	7.39
6	-0.01	137.90	146.10	49.24	96.81	127.50	115.50	113.90
	0.00	18.40	19.25	27.15	-56.32	-56.07	-42.49	-38.02
	89.10	9.11	12.61	51.81	14.54	3.18	6.84	5.00
7	-0.02	143.80	146.10	88.26	108.40	123.90	118.20	115.10
	0.00	12.35	11.97	9.25	-30.78	-43.37	-41.48	-37.21
	71.97	-5.21	-8.34	-28.47	-22.18	-12.04	0.42	4.43
8	-0.01	110.80	138.10	131.80	128.00	112.30	108.30	111.00
	0.00	14.19	0.30	-13.71	-28.86	-30.92	-35.64	-33.42
	74.93	-4.92	-7.07	-11.88	-13.31	-11.13	-2.21	4.58
9	-0.02	111.70	161.30	183.20	129.10	129.30	121.50	113.10
	0.00	17.80	-3.12	-20.17	-23.48	-18.89	-23.20	-26.10
	77.93	-8.59	-13.36	-10.67	-10.16	-6.85	-0.06	6.40
10	-0.02	100.10	125.90	172.70	171.20	163.80	194.70	225.30
	0.00	12.46	-4.11	-16.49	-19.85	-17.40	-21.11	-21.84
	80.99	-15.28	-21.85	-15.58	-9.92	-4.62	0.08	4.31
11	-0.01	92.58	94.94	93.84	91.83	93.15	105.30	149.00
	0.00	6.16	0.20	-4.93	-8.64	-5.20	-14.50	-21.30
	83.96	-13.08	-14.99	-15.24	-11.79	-6.83	-7.71	-0.44
12	-0.01	88.86	92.50	90.53	88.50	90.88	88.57	90.92
	0.00	3.52	0.58	-1.83	-4.20	-3.43	-6.83	-8.91
	87.05	-9.35	-10.20	-10.51	-9.30	-6.33	-8.30	-6.52

PROPULSIVE WING FLOW FIELD

RAKE SUMMARY, RUN 393

PT	ALPHA BETA HEIGHT	VT1 ALP1 BET1	VT2 ALP2 BET2	VT3 ALP3 BET3	VT4 ALP4 BET4	VT5 ALP5 BET5	VT6 ALP6 BET6	VT7 ALP7 BET7
1	0.01	66.09	69.05	68.63	68.63	66.72	67.12	72.57
	0.00	-3.97	-7.48	-10.26	-14.70	-13.33	-16.87	-15.47
	57.12	16.53	13.71	13.19	13.14	9.56	6.83	4.39
2	0.00	66.28	69.15	69.39	68.94	66.66	67.82	73.67
	0.00	-3.24	-8.40	-12.42	-17.86	-16.14	-22.91	-20.59
	59.91	20.95	18.75	16.27	17.16	12.83	9.26	4.72
3	0.00	69.13	71.01	72.10	72.20	66.70	70.66	75.25
	0.00	-0.07	-6.74	-13.99	-23.11	-27.67	-31.02	-28.65
	62.99	25.33	25.53	25.17	23.75	19.02	13.05	7.43
4	0.00	74.37	87.07	91.25	84.30	74.48	76.56	78.89
	0.00	9.51	4.44	-10.24	-32.22	-40.83	-40.38	-35.57
	66.12	29.67	31.39	36.13	34.79	23.31	15.90	9.47
5	0.00	85.50	112.40	127.00	121.90	92.18	83.52	83.34
	0.00	18.10	7.15	-6.41	-31.95	-54.42	-49.24	-42.26
	69.09	26.82	25.71	32.97	33.06	20.74	14.59	9.45
6	-0.01	108.70	118.70	49.82	54.12	105.90	88.14	84.58
	0.00	15.52	9.77	23.17	-66.25	-54.33	53.21	-48.00
	72.06	6.10	5.19	11.53	2.89	-0.65	6.06	7.38
7	-0.01	112.90	134.50	100.50	91.32	94.11	85.81	82.95
	0.00	6.82	1.32	-3.85	-35.32	-46.20	-47.84	-44.86
	75.00	-8.57	-7.79	-20.01	-21.05	-13.91	-1.22	5.88
8	-0.01	76.33	102.15	129.80	93.50	86.89	82.16	78.05
	0.00	13.85	-2.19	-16.07	-30.82	-34.94	-39.53	-38.35
	77.92	-7.30	-6.01	-5.80	-9.44	-11.29	-2.52	5.05
9	0.00	76.12	108.00	149.70	144.00	142.40	140.40	120.70
	0.00	18.34	-0.80	-20.63	-25.47	-22.27	-23.86	-25.51
	81.02	-8.49	-11.89	-9.58	-6.02	-3.64	2.00	6.27
10	0.00	69.43	90.34	143.30	163.90	156.70	167.30	197.00
	0.00	16.65	-1.31	-20.80	-26.14	-24.00	-26.39	-26.53
	83.97	-15.79	-22.30	-15.14	-8.43	-4.97	-0.47	3.09
11	0.00	62.58	63.38	70.32	65.10	71.01	85.23	120.70
	0.00	10.14	3.25	-6.56	-15.65	-13.72	-22.28	-27.83
	86.95	-16.47	-19.47	-19.69	-15.32	-10.23	-7.02	-1.07

PROPULSIVE WING FLOW FIELD

RAKE SUMMARY, RUN 394

PT	ALPHA BETA HEIGHT	VT1 ALP1 BET1	VT2 ALP2 BET2	VT3 ALP3 BET3	VT4 ALP4 BET4	VT5 ALP5 BET5	VT6 ALP6 BET6	VT7 ALP7 BET7
2	0.00	131.20	135.80	137.80	133.50	135.50	134.80	133.30
	0.00	4.20	4.19	4.00	4.55	4.31	5.02	4.88
	56.79	-3.89	-3.49	-3.71	-2.52	-3.29	-2.07	-1.29
3	0.90	131.10	136.50	138.00	133.70	136.90	135.10	133.80
	0.00	4.53	4.44	4.41	5.00	4.73	6.08	6.48
	59.97	-3.91	-3.85	-4.03	-2.80	-3.22	-2.35	-1.50
4	0.00	131.10	136.40	137.90	133.80	136.50	135.30	133.40
	0.00	4.47	4.58	4.57	5.53	5.18	6.76	7.80
	62.86	-4.23	-4.08	-4.41	-3.35	-3.84	-3.31	-2.95
5	0.00	131.40	135.30	136.70	133.80	136.40	134.70	132.70
	0.00	4.48	4.73	4.88	5.51	5.32	6.90	7.81
	66.00	-4.50	-4.45	-4.83	-3.86	-4.38	-4.57	-5.06
6	0.00	131.20	134.70	137.70	132.90	136.40	134.60	132.00
	0.00	4.45	4.86	4.42	5.35	4.85	6.30	6.86
	69.06	-4.77	-4.77	-5.35	-4.43	-4.85	-5.62	-5.48
7	-0.01	130.90	135.20	137.30	133.20	136.40	134.50	132.20
	0.00	4.28	4.47	4.21	5.06	4.38	5.60	5.52
	71.95	-5.11	-4.98	-5.56	-4.84	-5.18	-6.08	-6.78
8	0.01	130.20	135.40	137.30	132.70	136.10	134.10	131.80
	0.00	4.08	4.23	3.92	4.52	3.84	4.84	4.85
	74.95	-5.27	-5.08	-5.72	-5.10	-5.52	-6.32	-6.77
9	0.01	130.40	135.40	136.70	132.40	135.90	133.90	131.30
	0.00	3.81	4.01	3.87	4.34	3.31	4.36	4.10
	77.98	-5.40	-5.18	-5.71	-5.11	-5.33	-6.26	-6.95
10	0.01	130.80	135.30	136.30	132.80	135.80	133.70	131.00
	0.00	3.64	3.81	3.49	3.91	3.08	4.07	3.76
	80.97	-5.46	-5.25	-5.73	-5.13	-5.39	-6.06	-6.32
11	0.00	129.90	134.80	136.80	132.40	132.30	133.80	130.80
	0.00	3.45	3.61	3.18	3.85	2.56	3.80	3.56
	83.97	-5.57	-5.25	-5.78	-5.11	-7.36	-5.86	-6.16
12	0.00	130.80	134.40	136.30	133.10	130.40	134.00	130.70
	0.00	3.20	3.52	3.05	3.57	0.49	3.70	3.43
	86.89	-5.80	-5.38	-5.74	-5.10	-7.16	-5.83	-6.06

PROPULSIVE WING FLOW FIELD

RAKE SUMMARY, RUN 395

PT	ALPHA BETA HEIGHT	VT1 ALP1 BET1	VT2 ALP2 BET2	VT3 ALP3 BET3	VT4 ALP4 BET4	VT5 ALP5 BET5	VT6 ALP6 BET6	VT7 ALP7 BET7
2	0.00	133.50	137.10	135.90	138.20	134.50	136.00	136.40
	0.00	4.62	4.13	4.30	4.12	4.35	4.85	4.79
	56.97	-3.78	-3.69	-3.97	-2.99	-3.57	-2.13	-1.09
3	0.01	134.80	136.60	136.80	137.60	135.50	136.00	136.00
	0.00	4.93	4.41	4.55	4.45	5.07	5.95	6.24
	60.06	-3.98	-3.93	-4.39	-3.31	-3.58	-2.41	-1.33
4	0.01	133.80	136.70	136.60	137.40	135.70	136.00	135.60
	0.00	4.88	4.52	4.70	4.81	5.40	6.67	7.52
	62.96	-4.29	-4.26	-4.68	-3.81	-3.97	-3.35	-2.79

PROPULSIVE WING FLOW FIELD

RAKE SUMMARY, RUN 396

PT	ALPHA BETA HEIGHT	VT1 ALP1 BET1	VT2 ALP2 BET2	VT3 ALP3 BET3	VT4 ALP4 BET4	VT5 ALP5 BET5	VT6 ALP6 BET6	VT7 ALP7 BET7
1	0.01	95.40	96.46	97.95	99.28	96.36	97.64	97.75
	0.00	6.01	4.65	4.58	4.21	3.92	3.85	2.91
	58.95	-1.00	0.00	-0.37	1.46	1.13	4.07	5.54
2	0.01	95.40	97.82	98.70	100.70	96.72	98.24	98.68
	0.00	6.55	5.55	6.11	5.33	5.91	5.77	5.24
	59.57	-1.03	-0.20	-0.16	1.82	1.81	5.24	7.29
3	0.01	96.05	97.40	98.29	101.10	97.83	99.47	102.80
	0.00	7.29	6.73	7.36	7.39	8.43	8.99	9.24
	62.97	-1.45	-0.50	-0.84	1.26	1.47	5.51	9.31
4	0.01	96.38	97.21	97.47	101.50	97.99	103.10	104.90
	0.00	7.96	7.69	8.62	8.73	10.74	13.07	14.66
	65.99	-2.06	-1.32	-1.68	0.23	0.01	3.72	7.52
5	-0.03	95.80	96.98	97.49	101.10	100.50	104.20	105.20
	0.00	8.55	8.42	9.58	9.84	12.19	15.13	18.42
	68.95	-2.93	-2.41	-3.13	-1.45	-2.29	-0.28	1.25
6	0.03	95.16	96.79	96.16	100.90	100.90	103.50	104.50
	0.00	8.71	8.85	10.12	9.85	12.19	14.75	16.80
	71.97	-4.19	-3.88	-5.00	-3.60	-4.72	-5.02	-6.16
7	0.03	95.21	97.02	96.37	99.70	100.50	102.50	103.10
	0.00	8.59	8.70	9.83	9.85	11.32	15.62	14.77
	74.98	-5.19	-5.10	-6.45	-5.88	-6.72	-7.69	-8.76
8	0.03	95.39	95.14	98.56	99.23	98.35	101.00	100.50
	0.00	8.52	8.82	9.55	9.35	10.84	12.73	13.83
	78.00	-5.89	-6.24	-7.75	-7.11	-8.31	-9.68	-11.41
9	0.03	94.24	94.77	97.24	97.48	97.84	98.23	97.48
	0.00	8.14	8.23	8.82	8.50	9.29	10.83	10.94
	80.98	-6.50	-6.85	-8.98	-8.33	-9.24	-11.40	-13.48
10	0.02	95.06	94.83	95.45	97.39	96.89	96.68	95.28
	0.00	7.19	7.29	7.87	8.72	7.47	8.45	7.51
	83.97	-6.94	-7.64	-9.36	-8.81	-9.45	-12.05	-13.72
11	0.02	93.82	93.17	93.85	95.93	94.03	95.55	93.74
	0.00	6.48	6.44	6.20	5.68	5.44	6.05	5.01
	86.97	-7.60	-8.14	-9.78	-8.80	-9.38	-11.77	-12.87

PROPULSIVE WING FLOW FIELD

RAKE SUMMARY, RUN 397

PT	ALPHA BETA HEIGHT	VT1 ALP1 BET1	VT2 ALP2 BET2	VT3 ALP3 BET3	VT4 ALP4 BET4	VT5 ALP5 BET5	VT6 ALP6 BET6	VT7 ALP7 BET7
1	0.00	67.34	65.15	66.77	72.40	67.06	67.58	66.16
	0.00	5.89	4.34	4.08	2.89	2.91	2.40	1.43
	56.93	-0.32	1.34	1.04	2.24	2.90	5.43	7.20
2	0.00	67.98	64.17	67.25	72.93	66.75	68.67	66.90
	0.00	6.66	5.58	5.27	4.26	5.23	4.39	3.35
	59.99	-0.24	1.52	1.60	2.66	3.76	6.89	9.67
3	0.00	68.29	64.46	67.38	73.56	67.11	69.03	70.32
	0.00	7.70	7.03	6.76	5.89	7.37	7.59	6.85
	62.95	-0.42	1.36	1.36	3.11	3.93	8.03	12.68
4	0.00	67.32	66.15	67.73	73.63	68.99	73.68	73.59
	0.00	8.22	7.82	8.43	8.36	9.94	11.52	12.35
	65.95	-0.90	0.93	1.01	2.51	2.41	7.42	11.95
5	0.00	67.82	64.11	68.79	73.80	70.18	74.84	75.61
	0.00	9.30	9.81	9.61	9.90	12.75	15.32	17.87
	68.97	-1.51	0.02	-0.85	0.85	0.79	4.44	8.28
6	0.00	67.52	66.58	68.57	73.89	71.85	75.95	78.65
	0.00	10.00	10.14	10.89	10.96	13.85	16.89	20.79
	71.99	-2.86	-1.57	-2.51	-1.16	-2.23	-0.39	0.17
7	0.00	66.83	66.73	68.69	72.72	71.83	74.90	74.22
	0.00	10.[illegible]	10.40	11.52	10.95	13.33	16.25	19.22
	74.96	-[illegible].97	-3.15	-4.70	-3.73	-4.89	-4.98	-7.15
8	0.01	6[illegible]	66.01	67.83	74.09	71.22	73.53	72.15
	0.00	10.15	10.59	12.21	10.77	12.71	14.83	16.70
	77.98	-5.27	-5.03	-6.53	-5.56	-6.89	-7.87	-9.93
9	0.01	67.37	65.89	67.90	73.22	69.63	71.24	70.61
	0.00	10.62	10.60	11.17	10.78	12.17	14.13	15.39
	80.95	-6.02	-6.17	-7.91	-7.11	-7.99	-9.83	-11.90
10	0.02	66.74	64.40	66.11	72.29	68.58	69.20	67.36
	0.00	10.01	10.23	11.14	9.92	11.06	12.79	13.66
	83.95	-7.07	-7.12	-9.19	-8.04	-9.27	-11.65	-14.54
11	-0.02	66.01	65.28	66.57	71.48	67.61	67.51	65.71
	0.00	9.12	9.41	9.87	8.34	8.93	10.44	10.12
	86.97	-7.50	-7.94	-10.50	-8.87	-10.10	-12.86	-15.48

PROPULSIVE WING FLOW FIELD

RAKE SUMMARY, RUN 390

PT	ALPHA BETA HEIGHT	VT1 ALP1 BET1	VT2 ALP2 BET2	VT3 ALP3 BET3	VT4 ALP4 BET4	VT5 ALP5 BET5	VT6 ALP6 BET6	VT7 ALP7 BET7
3	0.02	133.60	135.00	135.50	137.90	135.80	135.90	132.40
	0.00	3.94	4.02	4.33	4.17	4.17	4.86	4.92
	56.96	-0.66	-0.51	-0.38	0.33	0.54	0.90	1.62
4	0.02	134.30	135.10	135.90	137.90	138.10	135.90	133.20
	0.00	4.20	4.32	4.68	4.85	4.88	5.70	6.05
	60.00	-0.84	-0.56	-0.76	0.03	0.42	0.85	1.61
5	0.02	133.40	135.50	136.00	138.10	138.30	136.00	132.90
	0.00	4.21	4.46	4.95	5.08	5.41	6.46	7.20
	62.97	-1.10	-0.85	-0.92	-0.30	0.08	0.24	0.82
6	0.01	134.30	134.30	135.60	137.70	138.10	136.00	132.70
	0.00	4.24	4.68	5.04	5.25	5.67	6.76	7.76
	65.96	-1.36	-1.20	-1.44	-0.80	-0.41	-0.79	-0.82
7	0.01	133.80	134.70	135.10	137.80	136.60	135.70	132.20
	0.00	4.22	4.66	5.04	5.19	5.47	6.55	7.26
	69.01	-1.65	-1.57	-1.75	-1.32	-0.82	-1.00	-2.36
8	0.01	133.30	134.90	135.80	137.00	137.10	135.50	132.40
	0.00	4.13	4.53	4.80	4.98	4.96	6.00	6.22
	71.97	-1.93	-1.78	-2.06	-1.73	-0.93	-2.44	-3.17
9	0.01	133.30	134.50	135.20	137.20	137.50	135.40	131.60
	0.00	3.85	4.36	4.56	4.69	4.55	5.35	5.33
	74.95	-2.09	-2.02	-2.30	-2.12	-0.80	-2.73	-3.41
10	0.00	132.50	134.60	135.90	137.50	138.20	135.30	131.10
	0.00	3.90	4.08	4.18	4.18	4.18	4.82	4.63
	78.02	-2.23	-2.12	-2.64	-2.38	-0.43	-2.84	-3.32
11	0.00	133.20	134.40	134.80	136.70	138.70	134.80	131.00
	0.00	3.52	3.87	3.95	3.81	3.69	4.31	4.11
	80.97	-2.35	-2.27	-2.54	-2.30	0.02	-2.87	-3.15
12	0.00	133.30	134.30	134.20	136.40	135.70	134.70	130.80
	0.00	3.22	3.57	3.68	3.56	3.39	3.90	3.73
	83.95	-2.45	-2.34	-2.69	-2.31	0.83	-2.85	-2.96
13	0.01	133.30	134.30	134.70	136.20	141.70	134.50	130.60
	0.06	2.97	3.30	3.28	3.26	3.20	3.60	3.37
	87.10	-2.60	-2.45	-2.75	-2.31	2.31	-2.83	-2.89

PROPULSIVE WING FLOW FIELD

BASE SUMMARY, RUN 400

PI	ALPHA BETA HEIGHT	VT1 ALP1 BET1	VT2 ALP2 BET2	VT3 ALP3 BET3	VT4 ALP4 BET4	VT5 ALP5 BET5	VT6 ALP6 BET6	VT7 ALP7 BET7
1	0.02	93.51	91.98	93.56	97.88	94.00	94.90	89.80
	0.00	3.98	4.17	4.29	3.55	2.79	2.84	2.10
	56.95	2.30	3.19	3.56	3.82	4.29	4.80	5.82
2	0.02	93.34	91.07	94.02	98.37	94.24	95.30	89.20
	0.00	4.58	4.81	4.98	4.35	3.73	3.86	3.03
	56.96	2.47	3.83	4.10	4.57	5.04	6.02	7.40
3	0.02	94.37	92.31	93.95	97.95	94.01	95.60	89.07
	0.00	5.12	5.78	6.03	5.45	4.79	4.92	3.87
	82.95	2.49	3.04	4.06	5.15	5.68	7.12	8.35
4	0.02	95.31	93.80	94.37	98.23	94.08	96.41	93.05
	0.00	6.10	6.72	7.10	6.87	6.07	6.54	5.92
	95.95	2.31	3.74	4.51	5.42	6.53	8.46	12.09
5	0.00	94.37	93.71	95.50	99.13	94.01	99.96	95.23
	0.00	7.10	7.78	8.03	8.52	9.13	10.00	9.50
	88.95	1.85	3.50	4.24	5.20	6.84	9.60	14.10
6	0.00	95.51	93.84	94.41	98.70	95.02	101.90	99.88
	0.00	7.72	9.31	10.53	10.85	12.13	13.01	15.00
	72.03	1.03	3.58	3.30	4.74	6.03	9.10	13.97
7	0.00	93.70	92.56	95.47	101.00	99.88	106.20	113.50
	0.00	8.02	10.83	11.72	12.83	15.10	17.50	17.15
	75.03	-0.01	1.20	1.31	2.02	3.35	4.95	5.31
8	-0.01	94.02	93.10	97.37	102.20	101.00	113.90	120.50
	0.00	8.70	11.22	12.37	13.00	15.00	18.00	13.00
	78.01	-1.61	-0.37	-0.77	-0.00	-0.33	-2.99	-4.00
9	-0.01	94.22	93.03	97.01	101.70	102.80	114.00	120.30
	0.00	8.53	11.13	12.00	12.00	13.01	16.22	10.07
	81.01	-2.75	-3.12	-3.87	-3.18	-2.90	-7.51	-8.85
10	0.02	94.00	93.20	95.01	101.50	99.01	106.00	117.00
	0.00	8.11	10.03	10.80	10.90	10.80	11.87	9.47
	84.02	-3.03	-3.00	-5.10	-5.55	-3.84	-10.31	-12.02
11	0.02	94.37	93.13	93.83	97.03	100.00	100.20	99.10
	0.00	7.28	8.01	9.38	9.16	9.20	8.78	8.29
	87.03	-4.75	-4.07	-6.03	-6.10	-7.01	-9.68	-12.01

PROPULSIVE WING FLOW FIELD

BASE SUMMARY, RUN 401

PI	ALPHA BETA HEIGHT	VT1 ALP1 BET1	VT2 ALP2 BET2	VT3 ALP3 BET3	VT4 ALP4 BET4	VT5 ALP5 BET5	VT6 ALP6 BET6	VT7 ALP7 BET7
1	-0.10	84.88	85.01	88.24	74.03	74.58	85.88	95.41
	0.00	10.01	14.72	14.84	15.40	16.80	14.30	8.75
	87.03	-3.56	-2.67	-3.50	-3.87	-3.78	-8.10	-11.29
2	-0.04	85.72	83.51	86.20	74.02	72.27	83.25	92.36
	0.00	11.60	16.30	16.63	15.80	16.30	16.64	12.80
	84.04	-1.53	-0.27	0.27	-0.02	-0.70	-3.84	-5.88
3	-0.01	85.48	82.05	88.20	74.08	71.54	79.46	83.48
	0.00	10.20	15.51	15.15	15.27	16.10	16.81	16.72
	81.03	0.85	2.02	3.21	3.03	3.20	4.81	3.82
4	0.00	88.20	83.80	86.73	74.17	88.50	74.82	73.21
	0.00	9.48	14.03	14.02	14.82	15.88	17.44	20.37
	70.07	1.22	4.64	5.85	5.88	7.11	10.80	15.73
5	0.00	85.68	83.58	86.13	73.75	88.51	71.83	85.88
	0.00	8.35	13.80	11.87	11.74	13.13	12.98	14.80
	75.08	2.47	6.79	7.72	7.07	6.05	12.82	18.85
6	0.00	84.13	82.30	85.04	71.24	87.23	76.33	83.72
	0.00	7.30	10.80	9.85	8.93	9.00	8.10	6.91
	72.08	3.41	7.80	7.52	7.81	8.53	12.41	18.21
7	0.01	85.08	81.83	84.43	70.50	85.14	86.00	81.30
	0.00	5.90	7.70	7.87	7.21	5.87	6.18	5.37
	80.02	3.35	6.91	7.86	7.03	8.87	10.84	18.03
8	0.01	85.23	84.17	83.70	88.50	84.48	88.87	80.20
	0.00	4.00	5.12	5.01	5.81	4.28	3.90	3.11
	86.00	3.20	8.60	8.80	8.46	7.98	8.13	14.01
9	0.01	85.00	81.10	83.70	70.34	85.21	86.84	50.15
	0.00	4.10	5.20	5.11	4.87	3.20	2.90	1.83
	83.02	2.02	6.30	6.88	5.87	6.88	7.58	10.82
10	0.01	86.17	82.20	83.87	68.00	84.51	88.70	58.20
	0.00	3.30	4.10	4.20	4.00	2.50	2.10	1.20
	80.04	1.85	5.20	5.87	5.30	5.84	6.42	8.10
11	0.01	85.00	58.70	81.04	68.03	85.10	88.22	57.80
	0.00	2.70	3.70	3.78	3.22	1.57	1.84	0.81
	57.07	3.27	5.47	6.04	4.08	4.73	5.32	6.79

PROPULSIVE WING FLOW FIELD

BASE SUMMARY, RUN 003

PT	ALPHA BETA MACH	V11 ALP1 BET1	V12 ALP2 BET2	V13 ALP3 BET3	V14 ALP4 BET4	V15 ALP5 BET5	V16 ALP6 BET6	V17 ALP7 BET7
2	-0.02 0.00 57.03	132.50 3.30 3.40	136.70 3.97 3.10	135.00 3.61 3.85	136.00 3.30 4.53	136.50 6.11 3.61	137.20 -6.27 3.35	137.20 -6.01 3.82
3	-0.02 0.00 66.94	132.60 4.51 4.13	135.00 3.72 4.44	136.40 3.54 5.76	137.20 3.11 7.13	136.30 .57	137.70 -3.02 4.88	136.10 -2.50 3.36
4	0.02 0.00 63.16	133.20 6.72 3.83	136.20 6.88 5.37	136.70 7.50 6.80	135.80 3.83 15.24	135.80 -8.95 11.83	136.60 -6.15 5.48	136.50 -5.35 3.71
5	-0.02 0.00 68.03	132.50 8.35 1.87	137.80 8.05 3.68	132.60 13.83 3.76	134.50 7.16 7.48	139.70 -16.85 4.60	141.00 -11.76 3.47	136.00 -7.43 1.02
6	-0.02 0.00 80.06	132.80 8.12 -0.86	137.70 6.07 -2.11	132.80 8.40 -5.86	131.90 2.27 -6.04	135.50 -3.70 -6.03	136.80 -7.54 -2.80	136.10 -6.03 6.03
7	-0.02 0.00 72.10	133.40 5.44 -2.46	136.60 6.04 -3.80	135.20 5.31 -5.27	135.80 1.80 -4.01	132.80 -3.46 -3.10	134.30 -4.19 -1.80	133.30 -4.61 0.07
8	-0.02 0.00 75.00	133.10 5.01 -2.85	136.60 4.03 -3.51	136.20 4.44 -4.46	135.50 3.68 -3.88	136.80 0.82 -2.86	137.80 -0.88 -1.88	135.10 -3.27 1.01
9	-0.02 0.00 76.01	132.80 3.98 -2.48	136.60 3.02 -2.80	136.20 3.86 -3.38	135.80 3.24 -2.88	137.70 1.60 -2.35	135.10 1.38 -2.37	131.10 0.02 -0.56
10	0.00 0.00 81.11	132.20 3.55 -2.19	137.90 3.20 -2.43	137.80 3.25 -2.63	136.10 3.20 -2.80	137.60 3.06 -1.16	136.00 1.81 -2.19	135.10 1.20 -1.46
11	0.00 0.00 84.04	131.80 3.12 -1.72	137.70 3.04 -2.03	137.70 3.15 -2.07	135.80 3.08 -1.50	137.30 3.14 -0.45	135.50 3.30 -1.84	134.50 1.70 -1.80
12	0.00 0.00 87.00	130.80 3.10 -1.48	136.70 2.83 -1.75	137.60 3.23 -1.57	135.70 2.73 -1.06	137.80 3.23 0.16	135.60 2.52 -1.30	134.20 2.21 -0.88

PROPULSIVE WING FLOW FIELD

BASE SUMMARY, RUN 003

PT	ALPHA BETA MACH	V11 ALP1 BET1	V12 ALP2 BET2	V13 ALP3 BET3	V14 ALP4 BET4	V15 ALP5 BET5	V16 ALP6 BET6	V17 ALP7 BET7
1	-0.00 0.00 87.00	115.00 7.57 -10.00	117.50 5.79 -10.83	120.00 5.32 -11.00	120.50 4.31 -10.31	120.00 -5.51 -15.11	117.00 -14.50 -16.53	103.30 -23.13 -13.46
2	0.02 0.00 87.50	116.70 7.23 -10.56	117.70 5.11 -10.75	120.50 3.20 -12.06	120.30 -4.25 -14.04	118.00 -5.60 -15.23	108.00 -14.78 -16.61	104.00 -23.52 -13.17
3	-.10 0.00 84.03	123.70 7.30 -1.00	120.20 7.05 -6.05	123.00 10.31 -12.91	121.70 6.45 -21.26	118.00 -3.72 -25.23	118.30 -24.48 -23.48	123.20 -26.57 -9.79
4	-0.00 0.00 81.13	121.70 8.70 -5.15	120.00 10.71 -5.86	120.00 17.45 -6.10	107.50 25.20 -14.07	87.80 22.85 -57.77	66.75 -49.21 -11.33	125.00 -36.60 1.04
5	0.04 0.00 78.13	127.20 9.01 -4.35	125.10 9.60 -5.40	127.20 13.63 5.38	125.20 18.80 17.07	75.80 -24.88 36.84	122.40 -38.14 31.40	121.30 -36.27 13.79
6	-0.01 0.00 75.04	110.00 10.21 11.86	120.20 9.27 11.15	120.80 9.56 15.40	120.70 3.28 24.48	117.80 -16.20 33.85	120.80 -25.24 33.88	127.20 -26.74 17.39
7	-0.00 0.00 72.39	100.10 9.10 24.24	108.01 8.04 21.45	111.00 6.82 23.86	116.70 -7.11 24.01	105.70 -18.20 21.13	117.00 -18.44 24.97	110.00 -24.01 17.66
8	0.02 0.00 68.07	95.52 7.10 17.51	101.30 7.35 17.24	103.60 3.25 16.54	104.00 -6.02 16.56	104.80 -11.45 17.24	105.60 -16.52 17.66	100.80 -19.80 13.79
9	-0.05 0.00 65.23	93.01 6.77 15.11	100.70 -5.25 13.54	100.60 -3.60 14.60	100.10 -5.08 15.16	97.24 -5.80 13.88	96.11 -11.66 11.87	97.77 -15.12 9.50
10	-0.05 0.00 63.03	93.04 6.12 10.50	97.30 -1.25 6.61	95.35 -1.61 6.88	95.30 -3.03 10.17	93.35 -6.61 6.60	94.37 -7.85 7.84	96.00 -10.35 6.46
11	-0.00 0.00 60.07	93.03 6.25 8.21	97.34 -1.25 6.04	96.80 -1.59 7.12	96.04 -3.01 7.56	94.70 -4.80 6.84	94.95 -5.88 5.46	94.41 -6.47 4.57
12	0.00 0.00 57.30	93.50 -5.27 6.66	96.80 -1.34 5.17	97.44 -1.35 5.61	95.04 -3.02 6.04	94.50 -3.85 5.10	95.02 -4.29 4.30	94.04 -4.70 3.60

PROPULSIVE WING FLOW FIELD

BASE SUMMARY, RUN 405

PT	ALPHA BETA MACH	V11 ALP1 BET1	V12 ALP2 BET2	V13 ALP3 BET3	V14 ALP4 BET4	V15 ALP5 BET5	V16 ALP6 BET6	V17 ALP7 BET7
1	0.00	84.26	88.95	86.16	87.37	88.23	86.79	85.07
	0.00	-1.26	-2.37	-1.86	-1.84	-0.12	-0.85	-5.76
	57.85	6.66	4.61	4.76	5.31	4.80	3.81	3.26
2	0.02	83.31	86.78	87.45	86.86	85.07	85.68	85.12
	0.00	-1.46	-2.29	-2.86	-2.76	-5.15	-6.16	-7.13
	60.75	6.43	5.87	7.83	7.81	8.03	5.81	4.11
3	0.02	84.04	88.84	87.26	86.25	84.88	85.15	85.75
	0.00	-1.26	-2.28	-2.51	-2.83	-6.10	-7.70	-9.45
	63.04	8.88	7.46	8.22	8.94	8.07	6.40	5.53
4	0.02	84.97	70.16	85.87	88.21	87.74	87.84	87.88
	0.00	-1.58	-2.51	-3.24	-5.85	-8.14	-11.57	-14.83
	66.53	14.31	10.90	11.81	13.75	11.70	11.10	9.23
5	0.06	86.86	75.47	73.87	72.78	76.27	88.45	88.68
	0.00	-1.16	-1.95	-2.84	-6.54	-8.82	-12.84	-17.88
	68.98	15.88	12.41	12.68	15.68	14.74	15.14	12.88
6	0.07	86.26	74.18	74.88	75.12	75.81	81.85	75.57
	0.00	1.73	-0.21	-2.45	-4.83	-10.81	-13.83	-20.75
	72.01	16.86	18.71	18.26	24.83	18.92	24.88	18.87
7	0.07	78.72	77.32	77.88	88.75	83.98	82.98	88.87
	0.00	5.48	2.25	-1.41	-6.88	-12.88	-15.27	-22.23
	75.88	21.76	24.31	22.33	24.42	21.73	21.36	24.84
8	0.08	78.52	88.43	88.61	88.41	88.84	82.16	88.55
	0.00	10.77	8.98	1.82	-5.31	-18.88	-21.16	-24.79
	78.87	24.86	18.84	21.83	24.41	24.41	23.84	19.83
9	0.08	83.24	101.88	100.10	100.70	93.78	88.81	88.88
	0.00	11.88	5.82	4.88	8.22	-12.84	-14.75	-21.88
	81.11	8.11	5.18	7.48	18.84	21.88	23.85	18.31
10	0.08	101.88	105.10	87.88	88.85	48.58	83.85	85.21
	0.00	7.41	5.82	9.42	13.45	5.38	-48.78	-48.88
	84.88	-2.76	-3.42	-2.78	4.88	21.15	21.28	18.13
11	-0.01	108.78	108.88	101.88	81.38	81.84	54.48	88.48
	0.00	4.48	4.85	18.81	14.88	11.74	-27.18	-42.18
	87.01	-7.18	-7.84	-11.58	-15.27	-27.25	-38.82	-18.33

PROPULSIVE WING FLOW FIELD

BASE SUMMARY, RUN 405

PT	ALPHA BETA MACH	V11 ALP1 BET1	V12 ALP2 BET2	V13 ALP3 BET3	V14 ALP4 BET4	V15 ALP5 BET5	V16 ALP6 BET6	V17 ALP7 BET7
1	0.00	83.88	78.85	88.58	87.87	87.72	88.88	87.77
	0.00	1.84	1.18	2.18	1.88	1.84	1.81	1.48
	58.33	0.88	-0.88	-1.18	0.48	0.83	-0.87	0.32
2	0.11	91.87	88.71	87.28	88.51	88.21	85.87	88.41
	0.00	2.28	1.88	2.28	1.83	1.88	2.84	1.78
	64.33	0.87	-0.33	-0.78	0.78	1.85	0.88	0.48
3	0.24	131.78	138.38	137.88	138.88	135.88	138.28	137.78
	0.00	2.82	2.22	2.71	2.24	2.38	2.82	2.45
	64.73	0.88	-0.83	-0.28	0.81	0.74	0.38	0.48

PROPULSIVE WING FLOW FIELD

RAKE SUMMARY, RUN 000

PT	ALPHA BETA WEIGHT	VT1 ALP1 BET1	VT2 ALP2 BET2	VT3 ALP3 BET3	VT4 ALP4 BET4	VT5 ALP5 BET5	VT6 ALP6 BET6	VT7 ALP7 BET7
2	-0.01	0.12	0.10	0.10	0.11	0.10	0.11	0.10
	0.00	8.30	10.46	11.70	10.82	12.67	10.63	11.03
	57.02	0.33	-1.42	0.70	-0.55	-0.15	-1.21	-0.34

PROPULSIVE WING FLOW FIELD

RAKE SUMMARY, RUN 000

PT	ALPHA BETA WEIGHT	VT1 ALP1 BET1	VT2 ALP2 BET2	VT3 ALP3 BET3	VT4 ALP4 BET4	VT5 ALP5 BET5	VT6 ALP6 BET6	VT7 ALP7 BET7
3	0.00	130.50	140.30	135.30	135.00	135.00	134.50	145.00
	0.00	6.66	7.10	7.20	9.20	1.51	0.95	0.81
	57.02	2.98	1.39	0.63	1.30	1.71	1.45	1.50
4	0.00	130.10	140.00	135.10	130.10	130.00	135.00	145.00
	0.00	4.73	3.07	3.00	-0.10	0.88	0.44	0.48
	60.01	2.45	1.01	2.05	2.73	2.30	1.01	1.00
5	0.00	130.50	140.00	134.50	130.30	135.70	134.00	146.50
	0.00	5.00	4.71	5.51	-5.33	-0.05	-0.75	0.10
	63.00	1.60	0.01	0.45	0.03	1.83	1.70	2.00
6	0.00	130.50	140.30	135.30	134.00	130.30	136.30	140.00
	0.00	5.32	3.44	3.00	0.01	1.30	0.48	-0.03
	66.04	0.70	-0.04	-3.73	-2.80	-0.01	0.05	1.00
8	-0.01	131.50	130.00	134.70	135.70	135.00	134.50	146.40
	0.00	4.74	3.78	3.01	0.06	1.00	1.17	0.87
	66.01	0.44	-0.04	-2.34	-1.55	-0.23	-0.30	0.96
7	-0.01	130.30	130.50	134.00	135.00	138.00	134.50	146.20
	0.00	4.47	3.00	3.60	1.10	2.65	2.01	1.80
	72.01	0.50	-0.50	-1.05	-0.73	0.40	0.30	1.47
8	-0.01	130.10	130.00	134.70	135.30	135.00	[illegible]	145.70
	0.00	4.25	3.30	3.00	1.34	3.07	3.10	2.54
	75.10	0.73	-0.37	-1.73	-0.50	0.01	[illegible]	1.40
9	-0.02	129.30	130.40	134.50	134.30	136.00	133.00	145.30
	0.00	4.34	3.22	3.73	1.40	3.01	3.03	3.07
	78.01	0.75	-0.33	-1.44	-0.33	1.90	0.58	1.34
10	-0.02	130.00	130.70	134.70	134.07	136.00	133.00	144.00
	0.00	4.31	3.35	3.05	1.52	3.13	3.07	2.90
	81.02	0.70	-0.34	-1.53	-0.40	1.10	0.45	1.00
11	-0.03	129.00	130.30	134.50	134.50	135.70	133.50	144.70
	0.00	4.31	3.33	3.01	1.58	3.10	3.09	[illegible]
	84.03	0.60	-0.35	-1.04	-0.45	1.37	0.37	0.67
12	-0.03	130.10	130.10	133.00	135.00	135.00	133.00	144.30
	0.00	4.10	3.30	3.00	1.35	3.35	3.00	2.87
	87.04	0.00	-0.33	-1.03	-0.55	1.75	0.15	0.70

PROPULSIVE WING FLOW FIELD

RAKE SUMMARY, RUN 411

PT	ALPHA BETA HEIGHT	VT1 ALP1 BET1	VT2 ALP2 BET2	VT3 ALP3 BET3	VT4 ALP4 BET4	VT5 ALP5 BET5	VT6 ALP6 BET6	VT7 ALP7 BET7
2	0.02	90.00	102.90	94.00	95.05	95.24	92.83	117.00
	0.00	5.73	0.24	5.30	-4.13	-0.51	-2.63	-1.17
	57.00	5.01	2.38	0.06	2.02	3.42	3.80	2.71
3	0.02	90.51	105.00	104.90	103.50	90.35	92.90	113.00
	0.00	8.00	2.18	2.90	-2.04	-2.26	-4.79	-2.12
	50.38	5.68	3.07	4.44	0.27	5.45	3.00	3.00
4	0.01	92.70	122.00	141.90	120.00	110.10	95.21	115.00
	0.00	8.83	5.07	3.43	-1.00	-4.30	-5.01	-2.83
	63.00	5.03	2.30	0.00	3.55	4.92	3.46	3.04
5	0.01	92.31	122.90	150.20	155.50	111.10	102.60	103.30
	0.00	9.24	4.56	2.51	-0.34	-1.77	-2.10	-1.30
	66.01	2.41	-1.51	-2.96	-0.90	0.00	1.50	2.04
6	0.01	91.30	106.60	113.30	102.00	179.20	196.30	216.20
	0.00	8.10	3.03	2.07	-1.73	-1.02	-2.46	-2.50
	60.05	1.10	-2.17	-6.01	-3.07	-1.46	-1.37	0.35
7	0.01	90.07	102.70	94.72	98.70	115.70	175.00	192.60
	0.00	7.35	1.01	2.10	-1.05	-0.75	-3.35	-3.71
	72.03	0.96	-1.57	-5.00	-4.53	-1.45	-1.62	1.23
8	0.01	90.04	102.30	94.03	94.07	96.10	92.12	113.00
	0.00	6.73	1.30	1.40	-2.31	1.07	-0.27	0.34
	75.02	1.06	-1.34	-5.22	-3.34	0.73	-0.60	1.40
9	0.01	90.04	102.30	93.43	93.67	96.06	91.47	113.30
	0.00	6.10	0.04	1.28	-2.45	2.43	0.35	0.66
	78.00	1.40	-1.00	-4.72	-2.35	1.33	-0.30	1.67
10	0.00	90.00	103.30	97.00	94.47	96.93	91.07	113.00
	0.00	5.01	0.01	1.25	-2.50	2.31	0.71	1.21
	81.03	1.47	-0.92	-4.01	2.25	1.73	-0.10	1.42
11	0.00	90.71	103.30	93.00	93.05	96.30	91.24	113.30
	0.00	5.00	0.71	1.05	-2.33	2.41	0.05	1.33
	84.01	1.00	-0.70	-4.05	-2.30	1.04	-0.01	1.30
12	0.00	90.01	102.30	93.05	94.30	96.00	91.22	113.10
	0.00	5.00	0.50	1.07	-2.25	2.35	0.00	1.20
	87.02	1.00	-0.00	-4.37	-2.10	2.04	-0.04	1.30

PROPULSIVE WING FLOW FIELD

RAKE SUMMARY, RUN 412

PT	ALPHA BETA HEIGHT	VT1 ALP1 BET1	VT2 ALP2 BET2	VT3 ALP3 BET3	VT4 ALP4 BET4	VT5 ALP5 BET5	VT6 ALP6 BET6	VT7 ALP7 BET7
1	-0.01	91.50	75.00	95.70	95.90	95.97	92.14	91.50
	0.00	5.25	-1.00	-2.04	-10.10	-1.42	-5.07	-1.00
	57.03	5.07	2.39	-3.33	0.72	4.30	3.40	3.10
2	-0.01	92.00	75.50	90.42	71.02	90.20	92.00	91.72
	0.00	8.95	-0.51	-0.00	-6.01	-2.42	-7.74	-2.54
	63.00	10.30	3.37	0.30	4.05	6.11	4.50	2.40
3	-0.01	95.01	94.30	104.30	105.00	95.00	79.01	93.05
	0.00	12.04	3.00	2.40	-2.01	-4.00	-10.00	-3.53
	61.01	5.72	3.13	0.30	3.00	6.35	5.00	3.47
4	-0.01	96.00	104.00	122.00	133.30	130.70	113.30	133.40
	0.00	13.22	3.30	0.00	1.57	-1.03	-3.04	-2.10
	66.02	5.05	-1.00	-2.70	-0.40	1.33	2.07	3.30
5	-0.02	94.74	87.05	102.00	135.30	155.00	171.00	190.10
	0.00	13.30	1.43	-0.50	-3.41	-2.35	-3.25	-2.03
	60.00	5.44	-2.00	-5.70	-3.14	-1.30	-1.10	0.74
6	-0.02	93.03	75.41	79.02	94.05	100.00	139.30	153.50
	0.00	11.07	0.30	0.10	-5.01	-3.23	-5.50	-4.00
	72.01	4.50	-1.33	-0.10	-5.31	-1.15	-0.22	1.50
7	-0.02	91.07	75.01	94.00	94.00	70.73	90.53	99.22
	0.00	10.00	-0.30	-0.30	-7.27	0.07	-4.22	-1.30
	75.03	4.30	-1.03	-10.00	-5.30	0.30	-1.03	1.03
8	-0.02	91.50	75.30	94.03	96.07	96.01	92.14	91.47
	0.00	10.30	-0.00	-0.07	-7.41	1.77	-3.52	0.10
	78.00	4.03	-0.70	-5.00	-4.55	1.07	-0.03	2.27
9	-0.02	90.04	75.00	94.02	95.27	95.14	92.07	91.00
	0.00	10.01	-0.00	-1.01	-7.00	2.11	-3.21	0.23
	81.03	4.17	-0.04	-5.73	-3.02	2.44	0.17	2.03
10	-0.02	90.75	77.34	95.01	95.41	97.00	92.47	91.05
	0.00	9.23	-1.11	-1.00	-7.00	2.05	-3.03	0.47
	84.14	4.07	-0.06	-6.23	-4.03	2.00	0.18	1.01
11	-0.00	91.30	77.07	94.00	96.02	96.45	93.10	91.14
	0.00	9.27	-1.11	-1.14	-7.04	2.14	-1.70	0.47
	87.03	4.72	-0.05	-7.03	-3.51	3.01	0.36	1.00

PROPULSIVE WING FLOW FIELD

BASE SUMMARY, RUN 412

PT	ALPHA BETA WEIGHT	VT1 ALPT1 BETT1	VT2 ALPT2 BETT2	VT3 ALPT3 BETT3	VT4 ALPT4 BETT4	VT5 ALPT5 BETT5	VT6 ALPT6 BETT6	VT7 ALPT7 BETT7
1	3.63 0.00 30.39	81.87 6.05 5.32	75.87 -1.50 0.00	87.81 -1.53 -7.26	87.90 -7.18 -3.06	88.08 1.58 2.48	83.94 -2.75 0.76	83.82 0.38 2.10
2	-0.02 0.00 30.39	81.44 5.60 2.38	102.80 0.42 -0.17	93.50 0.79 -2.00	94.00 -2.61 -1.54	97.32 1.04 2.37	93.20 0.57 0.35	114.50 1.10 1.40
3	0.01 0.00 30.39	129.20 5.68 1.34	140.10 1.95 -0.17	134.50 2.38 -2.07	134.00 0.44 -0.68	136.10 3.03 2.57	132.00 3.44 0.17	140.50 2.20 0.00

PROPULSIVE WING FLOW FIELD

BASE SUMMARY, RUN 416

PT	ALPHA BETA WEIGHT	VT1 ALPT1 BETT1	VT2 ALPT2 BETT2	VT3 ALPT3 BETT3	VT4 ALPT4 BETT4	VT5 ALPT5 BETT5	VT6 ALPT6 BETT6	VT7 ALPT7 BETT7
1	0.00 0.00 30.00	85.01 3.53 3.14	86.03 1.48 0.74	88.05 2.05 1.05	87.10 1.03 1.50	84.87 3.80 1.14	88.04 2.41 1.48	85.98 2.54 1.76
2	-0.02 0.00 30.00	95.42 3.30 1.05	96.50 1.87 0.56	94.75 3.24 0.86	94.22 3.11 1.13	92.18 2.97 1.56	93.85 2.72 1.39	95.14 2.80 1.80
3	0.01 0.00 30.00	130.00 3.76 1.68	137.40 2.98 0.76	136.50 3.17 0.43	134.00 3.00 0.00	134.20 3.49 1.53	134.70 3.51 1.76	135.40 3.48 1.48

PROPULSIVE WING FLOW FIELD

BASE SUMMARY, RUN 416

PT	ALPHA BETA HEIGHT	VT1 ALP1 BET1	VT2 ALP2 BET2	VT3 ALP3 BET3	VT4 ALP4 BET4	VT5 ALP5 BET5	VT6 ALP6 BET6	VT7 ALP7 BET7
1	-0.01	131.70	137.00	138.10	134.30	136.30	134.40	135.00
	0.00	3.04	2.73	3.23	3.08	4.46	3.92	3.95
	57.00	2.11	1.02	0.63	1.75	4.10	2.10	2.00
2	-0.01	132.10	136.90	135.00	134.40	137.90	134.00	135.00
	0.00	3.04	2.77	3.44	3.00	4.67	4.20	4.46
	60.07	2.02	1.01	0.63	1.63	3.00	1.95	2.50
3	-0.01	132.20	137.40	135.00	134.20	137.30	134.10	135.00
	0.00	3.02	2.61	3.51	3.34	4.63	4.31	4.04
	63.02	1.91	0.92	0.66	1.42	3.46	1.63	1.87
4	-0.01	131.00	137.20	138.20	134.00	137.10	134.00	135.00
	0.00	3.05	2.84	3.46	3.10	4.32	4.10	4.30
	66.00	1.84	0.84	0.41	1.27	3.30	1.30	1.47
5	-0.01	131.40	137.40	135.00	134.20	138.70	134.10	135.00
	0.00	3.04	2.70	3.44	3.13	4.00	3.07	4.00
	68.00	1.61	0.77	0.35	1.10	3.22	1.13	1.33
6	-0.02	131.00	136.90	135.90	134.30	136.00	133.00	135.00
	0.00	3.00	2.73	3.43	3.03	3.94	3.23	3.75
	72.00	1.76	0.77	0.30	1.05	3.21	1.06	1.35
7	-0.02	131.00	137.70	135.00	134.70	136.00	134.10	135.40
	0.00	3.05	2.77	3.30	2.88	3.00	3.70	3.08
	75.00	1.74	0.73	0.19	1.02	3.31	1.05	1.40
8	-0.02	132.00	137.10	135.00	134.10	137.10	134.10	135.10
	0.00	3.73	2.70	3.35	2.95	3.77	3.70	3.00
	78.02	1.00	0.73	0.31	1.13	3.47	1.04	1.43
9	-0.03	131.50	138.00	135.10	135.30	138.00	134.20	134.70
	0.00	3.02	2.73	3.20	3.02	3.68	3.71	3.05
	81.00	1.68	0.84	0.33	0.95	3.77	1.03	1.50
10	-0.03	131.30	138.50	136.00	134.20	138.50	134.00	134.75
	0.00	3.73	2.85	3.17	2.75	3.64	3.07	3.60
	84.02	1.05	0.78	0.22	0.95	4.30	0.90	1.30
11	-0.03	132.00	137.10	138.20	134.10	138.00	134.00	134.50
	0.00	3.75	2.85	3.22	2.90	3.53	3.60	3.06
	87.01	1.50	0.71	0.31	0.90	4.00	1.04	1.33

PROPULSIVE WING FLOW FIELD

BASE SUMMARY, RUN 417

PT	ALPHA BETA HEIGHT	VT1 ALP1 BET1	VT2 ALP2 BET2	VT3 ALP3 BET3	VT4 ALP4 BET4	VT5 ALP5 BET5	VT6 ALP6 BET6	VT7 ALP7 BET7
1	0.01	93.31	97.41	98.38	95.33	100.70	94.70	95.70
	0.00	3.00	3.51	3.16	3.71	5.07	3.72	3.70
	57.00	2.04	1.07	1.14	2.10	5.01	3.02	4.11
2	0.01	93.34	97.00	96.01	94.04	101.70	94.53	95.03
	0.00	3.35	3.00	3.95	3.00	5.16	4.07	4.00
	60.00	2.74	1.30	1.30	2.44	5.01	3.37	4.14
3	0.01	93.05	97.24	96.10	95.00	100.70	94.04	95.50
	0.00	3.63	3.04	3.62	3.40	5.50	3.08	3.05
	63.01	2.03	1.30	0.98	1.01	5.00	3.00	3.10
4	0.00	92.73	95.00	97.10	95.11	100.50	94.44	95.02
	0.00	4.77	3.00	3.73	3.00	5.70	3.14	3.07
	66.01	2.53	1.33	0.47	1.33	5.30	1.77	1.00
5	0.00	93.07	95.03	95.13	95.30	101.00	94.11	95.00
	0.00	4.05	3.08	3.01	3.10	5.30	4.71	4.00
	69.01	2.17	0.80	0.47	1.10	5.70	1.10	1.10
6	0.00	93.54	97.00	94.00	94.04	101.30	95.24	95.00
	0.00	4.00	3.75	3.00	3.00	5.04	4.24	4.24
	72.00	1.95	0.07	7.05	0.00	5.30	0.70	0.00
7	0.00	93.03	97.51	95.50	94.30	100.00	94.30	95.00
	0.00	4.17	3.03	3.30	3.01	5.00	3.75	3.71
	75.00	1.77	0.53	0.04	0.01	5.20	1.07	1.00
8	0.00	93.10	97.30	94.70	94.00	101.00	94.11	95.10
	0.00	4.15	3.00	3.37	3.03	5.00	3.00	3.50
	78.01	1.90	0.51	0.10	0.00	5.50	0.74	1.07
9	0.00	93.54	95.00	94.03	95.00	103.00	94.11	95.34
	0.00	4.04	3.04	3.11	1.04	5.03	3.00	3.34
	81.00	1.03	0.04	0.00	0.04	5.30	0.75	1.17
10	-0.01	91.41	95.10	96.01	95.43	100.10	94.10	95.03
	0.00	4.03	3.24	3.03	3.44	5.00	3.04	3.10
	84.01	1.72	0.00	-0.00	0.01	7.00	0.75	1.00
11	0.01	93.04	96.40	94.00	94.71	100.00	94.34	95.24
	0.00	3.01	3.20	2.00	3.40	5.07	3.17	3.30
	87.00	1.40	0.57	0.43	0.71	7.05	0.03	1.31

PROPULSIVE WING FLOW FIELD

RAKE SUMMARY, RUN 410

PT	ALPHA BETA HEIGHT	VT1 ALP1 BET1	VT2 ALP2 BET2	VT3 ALP3 BET3	VT4 ALP4 BET4	VT5 ALP5 BET5	VT6 ALP6 BET6	VT7 ALP7 BET7
1	-0.01	84.58	86.67	86.19	86.33	73.67	85.80	87.74
	0.00	4.42	1.75	2.44	1.71	7.63	3.58	3.00
	57.00	3.55	2.00	1.03	2.96	9.30	4.00	4.97
2	-0.01	85.22	88.47	86.44	87.01	75.79	85.80	87.83
	0.00	4.88	1.89	3.03	2.06	7.43	3.57	4.11
	60.00	3.20	1.85	1.67	2.88	9.51	4.14	5.02
3	-0.02	85.22	88.45	87.10	86.35	75.87	86.50	88.10
	0.00	4.80	2.20	3.34	2.98	8.31	4.54	5.74
	63.00	3.17	1.50	0.92	2.71	9.30	3.47	4.36
4	-0.02	84.83	88.49	87.38	87.52	75.43	86.86	87.70
	0.00	5.12	2.21	3.22	3.70	8.88	4.81	6.01
	66.00	3.00	1.50	1.33	2.29	8.81	2.54	3.74
5	-0.02	84.85	88.58	87.45	87.23	72.73	86.84	87.84
	0.00	5.35	2.28	3.45	3.02	7.73	4.85	5.27
	68.01	2.82	1.24	0.84	1.71	7.75	1.58	1.48
6	-0.02	86.00	87.44	87.02	87.85	72.43	86.84	87.80
	0.00	5.30	2.43	3.28	2.58	7.32	4.10	4.53
	72.00	2.25	0.92	0.08	1.34	7.38	1.05	1.18
7	-0.03	85.23	88.10	87.04	87.14	71.79	86.73	87.10
	0.00	4.91	2.20	3.08	2.96	8.18	3.58	3.90
	75.02	1.95	0.68	-0.03	0.88	8.88	1.00	1.18
8	-0.03	85.04	88.14	86.79	86.25	72.75	86.07	86.48
	0.00	4.30	2.11	3.08	3.05	8.27	3.36	3.72
	78.00	2.10	0.47	0.24	1.23	7.30	0.85	1.10
9	-0.03	83.80	86.84	86.32	86.08	72.75	87.49	86.88
	0.00	4.98	1.95	2.54	2.02	8.75	2.07	3.43
	81.00	2.32	0.77	-0.03	0.81	8.05	0.74	1.17
10	-0.04	85.53	88.38	88.10	86.97	75.55	88.53	88.88
	0.00	4.37	2.02	2.04	2.67	7.36	2.83	3.25
	84.00	1.84	0.42	0.38	1.02	8.88	1.03	1.34
11	-0.04	83.87	88.84	86.13	85.98	78.94	88.80	88.01
	0.00	3.01	1.78	2.50	2.83	8.11	2.81	3.18
	87.01	1.88	0.81	0.34	1.17	10.43	1.02	1.21

PROPULSIVE WING FLOW FIELD

RAKE SUMMARY, RUN 410

PT	ALPHA BETA HEIGHT	VT1 ALP1 BET1	VT2 ALP2 BET2	VT3 ALP3 BET3	VT4 ALP4 BET4	VT5 ALP5 BET5	VT6 ALP6 BET6	VT7 ALP7 BET7
2	0.01	85.88	86.27	86.79	87.86	87.38	87.88	88.78
	0.00	2.41	7.53	3.02	3.91	3.02	3.35	3.78
	30.10	-0.04	-0.83	-0.08	-0.12	1.88	-0.63	-1.14
3	0.02	93.34	95.62	95.46	95.88	97.85	95.43	91.43
	0.00	3.98	3.73	3.04	3.35	3.17	3.41	3.52
	36.16	-0.83	-1.08	-0.87	-0.78	3.06	-0.71	-0.72
4	0.00	132.80	137.00	136.10	135.90	142.30	135.30	132.50
	0.00	3.57	3.74	3.88	3.44	4.11	4.01	4.98
	36.10	-0.86	-1.17	-1.79	-0.88	3.85	-0.94	-0.80

PROPULSIVE WING FLOW FIELD

RAKE SUMMARY, RUN 420

PT	ALPHA BETA HEIGHT	VT1 ALP1 BET1	VT2 ALP2 BET2	VT3 ALP3 BET3	VT4 ALP4 BET4	VT5 ALP5 BET5	VT6 ALP6 BET6	VT7 ALP7 BET7
1	0.04	134.20	137.90	137.10	136.60	137.90	136.30	133.50
	0.00	3.44	3.68	3.00	3.48	3.82	4.14	4.20
	57.00	-0.35	-0.73	-0.85	-0.30	1.46	-0.03	0.57
2	0.04	134.00	137.10	137.70	136.20	136.00	136.30	133.40
	0.00	3.20	3.18	3.01	3.91	4.03	4.52	4.97
	60.00	-0.33	-0.75	-0.84	-0.41	1.00	-0.10	0.30
3	0.04	133.40	136.20	136.90	136.10	130.20	133.20	133.20
	0.00	3.37	3.21	3.78	3.90	4.36	4.68	5.23
	63.00	-0.46	-0.84	-0.95	-0.50	1.53	-0.50	-0.54
4	0.04	133.70	136.90	137.70	136.20	136.00	136.30	132.00
	0.00	3.33	3.30	4.00	3.94	4.31	4.48	4.80
	66.00	-0.60	-0.90	-1.03	-0.84	1.11	-1.07	-1.31
5	0.04	132.00	137.90	136.60	135.70	136.00	136.20	132.10
	0.00	3.18	3.21	3.63	3.78	4.10	4.24	4.30
	68.00	-0.70	-1.07	-1.11	-0.88	0.88	-1.24	-1.37
6	0.04	133.00	136.40	136.90	136.50	136.00	136.30	132.20
	0.00	3.12	3.19	3.98	3.82	4.17	3.95	3.90
	72.01	-0.77	-1.08	-1.02	-0.85	0.80	-1.26	-1.70
7	0.03	132.50	136.00	137.00	136.20	136.70	136.00	131.90
	0.00	3.08	3.11	3.49	3.52	4.06	3.70	3.87
	75.00	-0.75	-1.08	-1.06	-0.88	0.99	-1.17	-1.12
8	0.03	132.00	136.70	137.50	136.50	130.00	136.10	131.00
	0.00	2.93	3.05	3.27	3.85	4.03	3.70	3.70
	78.01	-0.77	-1.08	-0.88	-0.90	1.00	-1.11	-1.10
9	0.02	132.00	136.50	136.00	136.00	136.00	136.10	131.20
	0.00	3.00	3.00	3.43	3.81	4.15	3.70	3.81
	81.00	-0.82	-1.10	-0.92	-0.88	0.90	-1.04	-1.03
10	0.02	133.00	137.30	137.70	136.20	136.00	136.10	131.00
	0.00	2.84	2.95	3.31	3.52	4.15	3.70	3.85
	84.00	-0.84	-1.03	-0.98	-0.80	1.01	-1.00	-1.01
11	0.02	133.30	136.00	137.00	135.00	130.50	135.00	130.50
	0.00	2.84	2.97	3.31	3.4[illegible]	4.20	3.70	3.84
	87.02	-0.88	-1.03	-0.98	-0.81	1.29	-0.94	-1.01

PROPULSIVE WING FLOW FIELD

RAKE SUMMARY, RUN 421

PT	ALPHA BETA HEIGHT	VT1 ALP1 BET1	VT2 ALP2 BET2	VT3 ALP3 BET3	VT4 ALP4 BET4	VT5 ALP5 BET5	VT6 ALP6 BET6	VT7 ALP7 BET7
1	0.00	94.02	95.83	97.05	96.50	96.63	98.30	00.06
	0.00	2.77	3.33	3.73	4.01	3.85	4.48	4.06
	57.02	0.10	0.15	0.91	1.03	2.56	1.82	2.56
2	0.00	94.07	94.00	95.07	95.00	95.21	95.00	00.04
	0.00	2.93	3.06	4.31	4.77	4.50	5.32	6.37
	60.01	0.09	0.00	0.73	0.92	2.13	1.54	2.02
3	0.05	93.42	94.00	95.50	95.90	95.25	93.81	00.05
	0.00	3.25	3.53	4.00	5.15	5.11	5.24	6.22
	63.00	0.10	-0.12	0.05	0.40	1.06	0.00	0.67
4	0.05	93.76	93.87	95.20	95.16	96.02	98.06	00.41
	0.00	3.36	4.05	4.50	5.30	5.06	5.90	7.28
	66.01	-0.36	-0.38	0.18	0.00	2.48	-0.54	-1.02
5	0.05	93.31	94.72	95.44	95.35	97.20	95.05	00.55
	0.00	3.07	3.00	4.32	4.03	4.50	5.14	5.06
	68.01	-0.07	-0.06	-0.14	-0.40	2.20	-1.15	-2.20
6	0.05	93.36	94.05	94.45	94.00	97.22	95.02	00.12
	0.00	2.95	3.63	4.30	4.63	4.46	4.62	5.06
	72.01	-0.07	-0.03	-0.30	-0.05	2.54	-1.35	-2.31
7	0.05	93.16	92.00	93.04	95.01	97.00	95.03	07.04
	0.00	3.09	3.08	4.09	4.61	4.00	4.20	4.60
	75.00	-1.04	-1.08	-0.41	-0.49	2.74	-1.33	-2.11
8	0.05	92.55	93.05	94.50	95.20	97.70	95.05	07.04
	0.00	2.61	3.47	3.92	4.17	3.04	4.02	4.27
	78.01	-1.06	-1.03	-0.14	-0.98	2.63	-1.20	-1.94
9	0.05	93.40	92.70	94.51	95.10	97.02	95.71	07.04
	0.00	2.02	3.00	3.00	4.48	3.48	4.02	4.10
	81.00	-1.30	-1.10	-0.27	-0.00	2.00	-1.13	-1.76
10	0.04	92.70	94.01	95.57	95.07	97.47	95.07	07.03
	0.00	2.22	3.24	3.42	4.02	3.33	3.04	4.16
	84.01	1.30	-1.00	-0.38	-0.75	2.20	-0.00	-1.07
11	0.04	92.02	94.00	96.11	95.71	97.53	96.45	00.01
	0.00	2.22	[illegible].26	2.81	4.70	3.10	3.83	4.03
	87.00	-1.27	-1.13	-0.73	-0.07	2.16	-1.04	-1.03

PROPULSIVE WING FLOW FIELD

RAKE SUMMARY, RUN 433

PT	ALPHA BETA HEIGHT	VT1 ALP1 BET1	VT2 ALP2 BET2	VT3 ALP3 BET3	VT4 ALP4 BET4	VT5 ALP5 BET5	VT6 ALP6 BET6	VT7 ALP7 BET7
1	0.03	66.23	67.32	66.51	66.77	66.70	69.66	56.90
	0.00	1.86	3.14	3.72	5.15	3.27	4.66	4.96
	57.00	0.06	0.80	2.55	1.75	3.22	2.34	3.37
2	0.03	66.35	63.68	65.04	67.26	65.34	66.89	55.72
	0.00	2.20	4.08	4.48	6.43	4.79	5.21	7.63
	60.00	0.01	0.54	2.62	2.30	3.13	2.30	3.70
3	0.03	64.75	64.32	66.17	66.73	66.13	68.32	55.41
	0.00	2.27	4.11	4.52	6.04	5.23	6.38	10.63
	63.00	-0.15	0.81	2.53	1.71	2.02	1.45	1.78
4	0.03	65.07	64.33	66.78	68.15	67.57	68.48	56.24
	0.00	2.59	4.27	5.04	6.07	5.48	6.39	10.27
	66.00	-0.91	0.38	2.02	0.88	3.63	0.12	-2.95
5	0.03	65.07	64.84	66.52	67.17	67.88	68.87	55.23
	0.00	2.07	4.27	4.75	6.84	4.81	5.86	6.16
	69.00	-0.66	-0.21	1.58	0.65	2.98	-0.70	-3.36
6	0.02	66.70	64.07	65.43	66.86	68.35	68.78	55.85
	0.00	2.48	4.24	4.72	6.70	4.35	5.05	7.63
	72.00	-1.00	-0.54	0.05	0.27	3.88	-1.16	-3.52
7	0.01	65.18	64.24	67.93	66.27	68.67	69.21	55.67
	0.00	2.50	4.01	4.14	5.78	4.09	4.74	[illegible]
	75.00	-1.09	-0.60	0.78	-0.24	4.35	-1.10	-3.22
8	0.02	65.00	65.06	67.67	67.88	68.20	68.68	55.01
	0.00	2.08	3.77	4.04	6.55	3.87	[illegible]	5.09
	78.01	-1.30	-0.81	1.58	-0.05	3.50	1.00	-3.71
9	0.02	66.10	63.37	65.00	67.59	66.22	68.63	54.00
	0.00	1.77	3.71	4.15	6.17	3.83	4.43	5.02
	81.00	-1.53	-0.78	0.60	0.04	4.02	-0.02	-3.18
10	0.01	65.13	63.92	67.00	66.21	66.38	68.78	55.24
	0.00	2.04	3.60	3.39	5.82	3.82	4.21	5.65
	84.01	-1.47	-0.94	0.81	-0.16	3.34	-1.08	-2.80
	0.01	64.60	62.58	65.17	66.95	67.95	68.81	56.08
	0.00	2.53	3.92	4.26	5.30	3.23	4.00	5.13
	87.00	-1.43	-0.75	1.23	0.45	3.10	-0.87	-2.84

PROPULSIVE WING FLOW LD

RAKE SUMMARY, RUP

PT	ALPHA BETA HEIGHT	VT1 ALP1 BET1	VT2 ALP2 BET2	VT3 ALP3 BET3	VT4 ALP4 BET4	VT5 ALP5 BET5	VT6 ALP6 BET6	VT7 ALP7 BET7
2	-0.01	66.12	58.10	65.54	67.44	65.52	66.67	43.48
	0.00	-0.95	5.27	4.50	6.00	3.18	4.72	6.22
	30.00	0.23	1.70	6.68	3.25	1.78	1.46	-0.84
3	0.01	93.11	93.44	94.00	95.83	95.74	97.06	82.72
	0.00	1.22	3.65	3.02	5.23	3.06	3.63	4.46
	30.00	1.16	1.61	3.63	2.64	2.00	1.74	1.17
4	0.04	133.00	133.70	137.30	138.30	139.70	138.10	139.40
	0.00	3.66	3.82	3.92	4.48	3.48	3.06	4.16
	30.00	1.76	1.66	2.58	2.48	4.44	1.95	1.80

PROPULSIVE WING FLOW FIELD

RAKE SUMMARY, RUN 426

PT	ALPHA BETA HEIGHT	VT1 ALP1 BET1	VT2 ALP2 BET2	VT3 ALP3 BET3	VT4 ALP4 BET4	VT5 ALP5 BET5	VT6 ALP6 BET6	VT7 ALP7 BET7
1	0.03	132.80	133.70	136.70	138.00	139.70	136.10	136.30
	0.00	2.71	3.10	3.13	3.27	2.12	2.44	2.34
	57.01	3.16	3.27	4.13	3.81	3.12	2.77	2.71
2	0.03	132.70	134.00	136.70	138.80	139.40	137.00	136.00
	0.00	3.42	3.38	2.79	2.83	1.77	2.11	2.02
	60.01	3.77	4.58	5.26	4.76	3.47	2.03	2.70
3	0.03	132.90	133.80	136.40	137.10	139.00	138.10	137.10
	0.00	5.90	10.07	0.25	1.68	1.31	1.58	1.63
	63.01	2.58	11.05	5.02	4.18	3.51	2.86	2.46
4	0.03	133.30	133.90	139.80	136.30	136.10	137.80	137.10
	0.00	4.11	4.77	3.15	2.54	1.18	1.72	1.57
	66.00	-0.68	-1.37	-0.34	-0.10	6.76	0.30	0.02
5	0.03	132.40	133.20	136.30	136.90	136.20	137.80	136.50
	0.00	2.96	3.81	3.40	3.30	1.95	2.45	2.33
	68.00	0.26	0.00	0.02	0.06	1.48	0.66	0.70
6	0.03	132.40	132.90	130.40	136.70	136.50	137.90	136.50
	0.00	2.60	3.50	3.50	3.68	2.35	3.27	2.59
	72.00	0.60	0.66	1.70	1.33	1.95	1.66	1.12
7	0.02	132.40	132.80	135.90	136.40	137.30	136.00	136.40
	0.00	3.45	3.57	3.06	3.82	2.60	3.14	2.95
	74.01	0.86	0.66	2.10	1.61	2.40	1.37	1.50
8	0.02	132.90	133.50	135.30	136.60	138.00	136.20	136.50
	0.00	2.35	3.53	3.82	4.12	3.11	3.60	3.60
	78.00	1.11	1.18	2.37	2.00	3.72	1.64	1.88
9	0.02	132.90	133.80	136.00	136.40	139.10	136.40	136.30
	0.00	2.30	3.52	3.81	4.26	3.33	3.64	4.10
	81.00	1.10	1.38	2.86	2.16	4.41	1.68	1.60
10	0.01	133.00	132.80	136.00	136.30	140.20	136.80	136.40
	0.00	2.47	3.74	4.05	4.42	3.43	3.85	4.20
	84.00	1.29	1.44	2.48	2.18	4.78	1.70	1.56
11	0.01	132.50	133.10	135.90	136.30	140.10	138.40	136.10
	0.00	2.47	3.67	4.08	4.55	3.81	4.08	4.41
	87.01	1.34	1.51	2.74	2.26	4.84	1.70	1.53

PROPULSIVE WING FLOW FIELD

RAKE SUMMARY, RUN 426

PT	ALPHA BETA HEIGHT	VT1 ALP1 BET1	VT2 ALP2 BET2	VT3 ALP3 BET3	VT4 ALP4 BET4	VT5 ALP5 BET5	VT6 ALP6 BET6	VT7 ALP7 BET7
1	0.05	97.00	96.23	95.16	96.81	94.14	98.84	81.53
	0.00	0.72	1.03	1.46	1.87	-1.10	-0.16	-1.34
	57.01	4.60	6.17	6.36	5.86	4.43	3.32	2.90
2	-0.03	93.12	88.75	95.00	96.52	93.10	97.72	80.81
	0.00	3.06	3.01	0.61	0.07	-2.40	-1.20	-2.97
	60.00	6.58	0.00	10.38	8.84	4.93	3.00	2.03
3	-0.03	108.00	175.30	112.20	96.97	87.80	101.90	87.28
	0.00	10.48	5.03	-5.40	-1.61	-2.84	-1.82	-3.86
	63.00	5.51	5.10	11.33	8.56	4.87	4.05	2.84
4	-0.03	96.47	146.80	207.00	279.20	283.90	273.30	298.70
	0.00	-4.38	2.08	-2.17	-2.85	-3.56	-3.33	-3.56
	66.01	-2.25	-3.81	-0.18	0.75	2.10	1.25	1.37
5	-0.03	93.33	90.46	93.53	95.24	95.72	97.76	82.13
	0.00	3.46	5.50	4.06	4.40	0.74	1.10	-0.58
	68.01	-1.50	-1.95	-0.02	-1.02	0.88	-0.27	-0.42
6	-0.03	93.42	89.94	94.41	95.59	96.01	96.80	79.80
	0.00	2.37	4.73	3.95	4.37	1.85	2.35	1.70
	72.01	-0.76	-0.52	1.18	0.55	2.37	0.33	-0.06
7	-0.04	3.22	90.07	93.96	95.26	95.28	97.24	80.82
	0.00	1.88	4.31	3.07	4.00	2.68	3.02	2.98
	75.00	-0.29	0.10	2.45	1.45	3.04	0.92	0.82
8	-0.04	92.50	88.90	93.15	95.18	95.72	97.83	80.84
	0.00	1.98	4.30	4.17	5.25	3.13	3.50	4.12
	78.00	0.15	0.74	2.00	1.90	3.20	1.22	0.87
9	-0.04	93.13	91.48	94.50	95.47	96.73	97.85	81.65
	0.00	1.51	4.13	4.19	5.01	3.28	3.83	4.58
	81.00	0.37	1.03	3.13	2.10	3.74	1.40	0.88
10	-0.05	93.86	90.73	94.20	95.50	96.91	97.84	81.38
	0.00	1.53	4.24	4.42	5.37	3.49	4.08	4.83
	84.00	0.40	1.10	2.31	2.13	4.43	1.43	0.94
11	-0.05	93.91	96.87	94.48	95.72	97.13	97.86	81.25
	0.00	1.50	4.10	4.34	5.78	3.77	4.14	4.94
	87.00	0.63	1.10	3.51	2.20	4.45	1.50	0.88

PROPULSIVE WING FLOW FIELD

RAKE SUMMARY, RUN 426

PT	ALPHA / BETA / HEIGHT	VT1 / ALP1 / BET1	VT2 / ALP2 / BET2	VT3 / ALP3 / BET3	VT4 / ALP4 / BET4	VT5 / ALP5 / BET5	VT6 / ALP6 / BET6	VT7 / ALP7 / BET7
1	-0.05	85.45	57.63	64.48	87.58	84.32	80.98	43.74
	0.00	-1.82	1.99	0.20	3.83	-2.00	-0.51	-4.42
	57.00	4.82	8.00	13.84	8.70	4.43	3.18	1.31
2	-0.06	85.30	81.68	68.01	88.93	84.13	68.87	42.48
	0.00	-1.05	2.02	-1.58	1.05	-4.41	-2.13	-8.88
	80.01	8.83	12.21	14.17	7.88	5.84	3.58	1.41
3	-0.06	81.84	137.00	80.50	71.07	74.14	78.83	58.80
	0.00	8.41	5.06	-8.78	0.11	-2.77	-2.13	-6.51
	83.01	5.53	8.80	14.43	7.47	4.68	4.20	2.12
4	-0.06	74.18	137.10	108.40	210.50	263.60	251.30	274.20
	0.00	5.88	-0.14	-2.87	-3.88	-4.41	-3.06	-4.30
	88.01	-3.95	-2.70	0.58	1.05	2.27	1.28	1.47
5	-0.06	85.71	59.84	82.80	87.48	70.94	75.87	56.42
	0.00	2.75	7.87	5.82	7.00	-1.13	0.02	-3.30
	68.00	-2.81	-2.44	3.26	-0.41	0.93	-0.11	-2.11
6	-0.07	85.63	80.14	84.70	88.87	86.28	85.08	41.68
	0.00	1.06	8.42	5.24	7.94	3.06	3.82	4.82
	72.01	-1.84	-0.66	3.58	0.83	3.35	-0.03	-3.80
7	-0.07	84.78	58.53	84.52	87.01	86.41	88.13	42.32
	0.00	0.84	8.22	5.48	7.32	3.33	4.30	8.96
	75.00	-1.08	0.37	4.21	2.70	3.87	0.60	-2.32
8	-0.07	88.16	81.19	84.81	87.87	88.80	88.70	43.15
	0.00	0.13	5.88	5.21	8.18	3.81	4.40	8.08
	78.00	-1.15	0.80	5.13	2.23	4.24	1.08	-1.43
9	-0.07	86.48	81.59	85.88	88.01	87.30	89.83	43.15
	0.00	-0.20	5.44	5.28	8.17	4.18	4.84	8.90
	81.00	-1.10	1.00	5.02	2.77	4.27	1.11	-1.45
10	-0.08	84.87	59.12	84.63	87.98	87.51	70.53	43.44
	0.00	-0.24	5.88	5.85	7.84	3.75	4.88	9.11
	84.01	-0.82	1.25	6.37	3.21	4.85	1.15	-1.43
11	-0.08	85.25	81.88	86.32	88.15	87.23	70.78	43.58
	0.00	-0.18	5.48	5.38	8.15	4.04	4.87	9.48
	87.00	-0.58	1.29	5.90	2.34	4.15	1.18	-1.37

PROPULSIVE WING FLOW FIELD

RAKE SUMMARY, RUN 427

PT	ALPHA / BETA / HEIGHT	VT1 / ALP1 / BET1	VT2 / ALP2 / BET2	VT3 / ALP3 / BET3	VT4 / ALP4 / BET4	VT5 / ALP5 / BET5	VT6 / ALP6 / BET6	VT7 / ALP7 / BET7
2	0.03	87.06	80.50	84.47	88.18	87.[illegible]	88.71	88.88
	0.00	2.34	1.13	2.21	0.84	2.81	2.74	1.30
	30.00	0.87	0.21	-0.20	-0.08	0.75	0.02	0.51
3	0.00	95.78	98.48	95.12	98.47	96.50	98.19	99.82
	0.00	2.80	1.88	2.35	1.19	2.77	2.36	1.88
	30.01	0.84	0.15	-0.01	0.22	0.37	0.16	0.58
4	0.03	135.70	138.80	137.00	136.50	128.00	137.80	140.30
	0.00	3.10	2.38	2.98	2.17	3.10	3.02	2.88
	30.01	0.88	0.27	-0.08	0.39	0.41	0.24	0.55

PROPULSIVE WING FLOW FIELD

RAKE SUMMARY, RUN 420

PT	ALPHA BETA HEIGHT	VT1 ALP1 BET1	VT2 ALP2 BET2	VT3 ALP3 BET3	VT4 ALP4 BET4	VT5 ALP5 BET5	VT6 ALP6 BET6	VT7 ALP7 BET7
1	-0.02	135.20	138.70	137.50	138.00	137.30	137.70	140.70
	0.00	2.72	1.85	1.78	0.87	1.33	1.13	0.81
	58.88	1.88	1.38	1.20	1.38	0.81	0.85	0.88
2	-0.02	135.80	139.80	138.30	139.60	137.60	137.80	140.90
	0.00	3.5[illegible]	2.01	1.57	0.08	0.94	0.65	0.42
	60.01	2.54	2.54	2.23	2.07	1.21	1.07	1.06
3	-0.02	135.70	139.50	138.80	139.60	137.40	137.70	140.60
	0.00	5.44	11.79	-0.85	-0.87	0.07	-0.01	-0.21
	63.00	1.50	7.07	2.81	2.27	1.38	1.22	0.81
4	-0.02	135.80	139.80	137.80	138.80	137.20	136.50	138.80
	0.00	4.22	3.41	1.95	0.16	0.55	0.34	-0.03
	66.00	-0.68	-2.59	-3.22	-2.01	-1.31	-1.16	-0.10
5	-0.02	135.90	139.90	137.00	137.90	136.00	136.40	139.10
	0.00	3.05	2.28	2.18	0.85	1.15	1.02	0.54
	69.00	-0.48	-1.37	-1.81	-1.27	-1.15	-0.85	-0.24
6	-0.02	135.10	138.10	137.00	138.10	136.30	136.60	139.10
	0.00	2.73	1.05	2.15	1.17	1.59	1.40	0.95
	72.01	-0.15	-0.82	-1.20	-0.85	-1.05	-0.51	0.17
7	-0.02	135.70	139.40	137.90	138.40	136.30	136.70	138.70
	0.00	2.54	1.86	2.28	1.38	1.78	1.83	1.54
	75.00	0.03	-0.50	-0.77	-0.34	-0.73	-0.10	0.54
8	-0.03	135.40	138.90	136.80	138.20	136.20	137.00	138.90
	0.00	2.58	1.90	2.42	1.68	2.14	2.29	2.01
	78.01	0.25	-0.28	-0.52	-0.04	-0.01	0.04	0.59
9	-0.03	135.80	139.30	138.80	138.20	136.10	137.20	139.20
	0.00	2.55	1.98	2.48	1.94	2.38	2.54	2.28
	81.00	0.35	-0.17	-0.29	0.06	-0.52	0.05	0.53
10	-0.04	135.80	139.30	136.70	138.30	136.30	137.30	139.20
	0.00	2.54	2.09	2.58	1.95	2.42	2.68	2.41
	84.00	0.40	-0.09	-0.33	0.12	-0.5[illegible]	0.02	0.43
11	-0.04	134.80	138.10	136.50	138.10	135.80	137.10	138.80
	0.00	2.84	2.16	2.82	2.00	2.55	2.81	2.50
	87.01	0.48	0.01	-0.14	0.05	-0.85	-0.02	0.34

PROPULSIVE WING FLOW FIELD

RAKE SUMMARY, RUN 420

PT	ALPHA BETA HEIGHT	VT1 ALP1 BET1	VT2 ALP2 BET2	VT3 ALP3 BET3	VT4 ALP4 BET4	VT5 ALP5 BET5	VT6 ALP6 BET6	VT7 ALP7 BET7
1	0.00	98.80	100.20	96.87	98.25	98.77	97.68	101.30
	0.00	1.72	-0.47	-0.84	-2.95	-2.63	-3.02	-2.97
	57.91	4.83	3.87	4.23	3.52	2.72	1.84	1.41
2	0.00	98.18	98.38	98.28	98.38	95.21	98.18	100.90
	0.00	3.17	-0.37	-2.22	-4.88	-4.27	-4.93	-4.75
	60.00	6.28	6.94	6.46	4.74	3.86	2.15	1.73
3	0.00	95.90	214.90	100.40	100.50	104.50	103.00	108.90
	0.00	8.58	5.58	-8.60	-5.73	-3.39	-4.76	-4.74
	63.02	5.67	2.88	7.25	5.07	3.57	3.22	2.44
4	0.00	96.33	101.70	119.90	121.20	180.90	182.40	179.60
	0.00	8.7[illegible]	4.39	-2.94	-5.61	-8.29	-8.37	-8.59
	66.03	-0.8[illegible]	-4.88	-8.30	-2.32	0.33	0.17	1.30
5	0.00	95.05	98.18	93.94	95.84	92.98	92.44	97.37
	0.00	4.55	3.04	2.80	0.85	0.98	0.23	[illegible].03
	69.02	-0.98	-2.07	-3.37	-2.61	-2.44	-1.18	0.03
6	0.00	95.28	97.74	94.18	96.86	93.75	93.37	98.54
	0.00	3.61	2.22	2.40	0.70	1.73	1.05	0.53
	72.03	-0.40	-1.15	-2.40	-1.47	-1.78	-0.75	0.18
7	-0.01	95.01	97.40	93.65	96.81	94.51	93.77	98.77
	0.00	3.45	1.91	2.32	0.94	1.88	1.61	1.14
	75.02	-0.13	-3.77	-2.15	-1.30	-1.30	-0.30	0.58
8	-0.01	95.18	98.29	95.29	98.90	94.37	94.52	98.77
	0.00	2.88	1.88	2.43	1.05	2.28	1.84	1.58
	78.01	0.12	-0.40	-1.58	-0.82	-1.03	-0.20	0.82
9	-0.01	94.84	97.94	94.36	97.28	94.95	95.07	98.72
	0.00	3.20	1.79	2.30	0.98	2.18	2.08	1.78
	81.08	0.32	-0.34	-1.38	-0.58	-0.95	-0.09	0.55
10	-0.02	95.52	98.28	94.27	98.84	94.78	95.13	100.20
	0.00	2.84	1.70	2.56	0.84	2.43	2.20	1.84
	84.05	0.52	-0.15	-0.94	-0.3[illegible]	-0.82	-0.08	0.46
11	-0.02	94.53	98.50	94.34	98.82	94.87	95.38	100.50
	0.00	3.05	1.88	2.44	1.08	2.45	2.24	1.88
	87.00	0.53	-0.05	-1.25	-0.45	-0.78	-0.07	0.55

PROPULSIVE WING FLOW FIELD

RAKE SUMMARY, RUN 430

PT	ALPHA BETA HEIGHT	VT1 ALP1 BET1	VT2 ALP2 BET2	VT3 ALP3 BET3	VT4 ALP4 BET4	VT5 ALP5 BET5	VT6 ALP6 BET6	VT7 ALP7 BET7
1	-0.02	67.84	71.15	66.00	70.05	66.86	67.04	74.02
	0.00	1.75	-2.15	-2.76	-5.90	-4.26	-5.98	-4.83
	57.07	5.84	4.93	3.70	3.36	3.15	2.02	1.82
2	-0.03	66.05	80.46	85.90	80.17	85.78	85.90	73.18
	0.00	2.30	-2.34	-4.42	-7.13	-6.76	-8.19	-7.12
	60.01	7.88	6.31	7.86	5.36	4.21	2.78	1.93
3	-0.03	88.54	170.90	7[illegible].22	76.01	85.00	83.49	91.77
	0.00	8.48	5.39	-11.85	-8.51	-2.57	-4.38	-4.05
	63.00	9.45	3.29	9.87	8.40	3.72	3.41	2.76
4	-0.03	68.19	78.53	110.50	118.30	180.90	154.00	172.80
	0.00	7.86	2.10	-6.38	-8.75	-11.92	-11.47	-11.93
	68.01	0.56	-5.95	-4.74	-0.47	1.85	1.50	2.40
5	-0.03	68.03	70.93	61.91	68.24	64.45	63.56	70.56
	0.00	5.38	2.90	2.87	0.58	2.39	1.04	0.96
	69.01	0.12	-1.31	-1.06	-3.11	-2.36	-0.94	0.76
6	-0.03	67.04	68.71	63.67	67.90	63.91	64.05	71.37
	0.00	4.88	2.07	3.13	0.27	3.02	1.73	1.11
	72.01	0.42	-0.61	-3.06	-1.64	-1.56	-0.57	0.64
7	-0.03	66.40	70.62	65.12	68.84	65.34	65.33	73.18
	0.00	3.88	1.67	2.31	0.49	2.77	1.53	1.23
	75.22	0.50	-0.45	-2.75	-1.59	-1.81	-0.39	0.81
8	-0.04	68.81	70.18	64.87	68.66	65.74	65.54	73.07
	0.00	3.58	1.34	2.46	0.87	3.06	1.84	1.31
	78.00	0.58	-0.15	-2.05	-1.31	-1.30	-0.20	0.85
9	0.01	68.17	68.12	63.71	68.68	65.45	65.95	73.31
	0.00	3.80	1.22	2.27	0.16	3.28	1.93	1.50
	81.02	0.84	-0.09	-2.30	-1.04	-0.96	-0.18	0.77
10	0.00	67.19	71.00	65.36	68.11	65.97	65.97	73.50
	0.00	3.83	1.06	2.24	-0.08	2.81	1.86	1.48
	84.11	0.81	-0.03	-2.18	-1.30	-0.78	-0.13	0.86
11	0.00	67.58	70.80	65.06	69.31	65.37	66.00	73.50
	0.00	3.26	0.95	2.06	-0.06	2.90	1.89	1.46
	87.01	1.00	0.00	-1.74	-0.84	-0.81	-0.12	0.79

PROPULSIVE WING FLOW FIELD

RAKE SUMMARY, RUN 431

PT	ALPHA BETA HEIGHT	VT1 ALP1 BET1	VT2 ALP2 BET2	VT3 ALP3 BET3	VT4 ALP4 BET4	VT5 ALP5 BET5	VT6 ALP6 BET6	VT7 ALP7 BET7
2	0.00	68.03	80.61	95.22	89.45	72.88	86.88	70.50
	0.00	2.97	0.92	2.24	0.11	6.39	2.37	1.08
	35.06	0.58	-0.03	-1.51	-0.76	3.38	-0.15	0.30
3	0.01	95.47	98.44	93.58	97.48	103.70	95.38	98.93
	0.00	2.62	-1.56	2.50	1.25	6.20	2.56	2.08
	35.06	0.41	-0.39	-1.11	-0.44	3.06	-0.32	0.28
4	0.04	136.46	140.80	137.80	139.40	149.80	137.70	140.30
	0.00	3.18	2.39	3.08	2.33	6.37	3.29	2.98
	35.06	0.16	-0.47	-0.99	-0.46	3.80	-0.50	-0.05

PROPULSIVE WING FLOW FIELD

RAKE SUMMARY, RUN 432

PT	ALPHA BETA HEIGHT	VT1 ALP1 BET1	VT2 ALP2 BET2	VT3 ALP3 BET3	VT4 ALP4 BET4	VT5 ALP5 BET5	VT6 ALP6 BET6	VT7 ALP7 BET7
1	0.04	134.00	140.90	138.60	138.20	137.40	136.00	137.70
	0.00	2.74	2.61	3.22	2.55	3.16	3.46	3.95
	57.95	0.45	-0.11	-0.08	0.24	0.24	0.27	0.98
2	0.01	133.80	140.10	137.40	137.50	138.20	137.50	137.10
	0.00	2.70	2.75	3.25	2.73	3.51	3.85	4.23
	60.02	0.46	-0.22	-0.08	0.10	0.00	0.24	0.97
3	0.01	133.40	140.00	137.00	137.70	138.20	137.30	136.00
	0.00	2.82	2.76	3.37	2.78	3.54	4.08	4.56
	63.00	0.35	-0.31	-0.20	-0.07	-0.24	-0.23	0.05
4	0.01	133.20	140.10	136.00	137.70	138.90	137.40	136.00
	0.00	2.82	2.76	3.29	2.79	3.53	3.88	4.10
	66.01	0.28	-0.28	-0.56	-0.38	-0.50	-0.74	-0.73
5	0.01	133.30	140.00	137.10	137.30	138.10	137.10	136.00
	0.00	2.83	2.80	3.28	2.82	3.21	3.40	3.46
	69.38	0.17	-0.46	-0.53	-0.46	-0.86	-0.94	-0.89
6	0.00	133.00	140.00	137.00	137.30	138.00	136.90	137.00
	0.00	2.56	2.63	3.18	2.51	3.06	3.20	3.19
	72.00	0.17	-0.53	-0.50	-0.47	-0.66	-0.87	-0.64
7	0.00	132.50	140.30	138.00	137.00	139.60	136.70	136.00
	0.00	2.50	2.53	2.87	2.29	2.90	3.13	3.04
	75.03	0.19	-0.53	-0.57	-0.55	-0.50	-0.79	-0.46
8	0.00	133.20	130.20	137.40	137.00	135.00	136.00	136.00
	0.00	2.50	2.52	2.84	2.27	2.90	3.04	2.98
	78.10	0.17	-0.53	-0.55	-0.51	-0.80	-0.70	-0.39
9	-0.01	133.00	130.50	136.10	136.00	136.00	136.00	136.00
	0.00	2.44	2.47	2.86	2.10	2.75	2.98	2.95
	81.02	0.17	-0.95	-0.47	-0.35	-0.82	-0.84	-0.32
10	-0.01	132.00	130.50	136.70	137.10	134.00	132.00	136.70
	0.00	2.39	2.43	2.80	2.08	2.78	2.98	2.94
	84.06	0.13	-0.53	-0.44	-0.38	-1.24	-0.58	-0.28
11	-0.01	132.00	138.00	137.80	137.70	134.00	136.50	136.50
	0.00	2.44	2.38	2.79	2.04	2.73	3.00	2.93
	87.01	0.18	-0.54	-0.41	-0.47	-1.42	-0.58	-0.24

PROPULSIVE WING FLOW FIELD

RAKE SUMMARY, RUN 433

PT	ALPHA BETA HEIGHT	VT1 ALP1 BET1	VT2 ALP2 BET2	VT3 ALP3 BET3	VT4 ALP4 BET4	VT5 ALP5 BET5	VT6 ALP6 BET6	VT7 ALP7 BET7
1	0.02	92.24	98.97	98.77	97.00	95.33	96.54	96.18
	0.00	2.71	2.40	3.17	1.86	3.31	3.96	2.90
	57.04	1.64	0.87	1.27	1.51	1.00	2.51	3.44
2	0.02	92.47	98.91	96.34	97.17	94.71	96.23	96.07
	0.00	3.27	2.90	3.55	2.02	3.99	3.90	4.05
	60.00	1.61	0.53	0.58	1.00	1.53	2.44	3.00
3	0.02	92.22	100.00	95.00	96.00	94.84	96.51	99.24
	0.00	3.22	2.83	3.00	2.66	4.05	4.01	5.19
	63.01	1.36	0.37	0.47	0.05	0.91	1.44	2.15
4	0.02	93.03	100.10	96.79	97.04	95.05	99.00	96.00
	0.00	3.53	2.00	3.73	2.66	4.56	4.87	5.30
	66.01	1.27	0.16	0.10	0.10	0.07	0.20	0.04
5	0.03	92.04	98.73	96.20	96.00	94.73	95.07	99.21
	0.00	3.20	2.74	3.56	2.16	4.10	3.88	4.07
	69.03	1.00	-0.06	-0.36	-0.07	-0.36	-0.58	-0.41
6	0.02	92.00	99.00	94.30	95.70	94.33	95.05	96.00
	0.00	3.47	3.63	3.46	1.76	3.00	3.39	3.25
	72.03	0.00	-0.35	-0.70	-0.00	-0.34	-0.74	-0.37
7	0.02	91.61	100.50	95.00	96.00	94.20	95.00	96.00
	0.00	3.10	2.35	3.00	1.40	3.41	2.88	3.01
	75.00	0.72	-0.00	-0.70	-0.77	-0.35	-0.00	-0.31
8	0.02	92.14	99.04	95.43	95.00	94.37	95.23	99.37
	0.00	3.20	2.00	3.01	1.00	3.07	3.00	3.79
	78.00	0.72	-0.05	-1.07	-0.73	-0.20	-0.00	-0.10
9	0.01	91.51	99.00	94.00	96.30	94.04	95.20	99.71
	0.00	3.00	2.35	2.93	1.14	2.71	2.95	3.54
	81.03	0.00	-0.57	-0.74	-0.01	-0.20	-0.00	0.02
10	0.01	92.05	95.00	94.70	96.15	94.70	95.27	99.00
	0.00	3.17	2.26	2.00	1.14	2.02	2.46	2.90
	84.00	0.00	-0.53	-0.00	-0.36	-0.21	-0.51	0.14
11	0.01	91.53	100.70	96.20	96.40	95.10	95.53	100.20
	0.00	3.01	2.04	2.01	0.00	2.56	2.20	2.41
	87.00	0.07	-0.20	-1.20	-0.00	-0.10	-0.40	0.10

PROPULSIVE WING FLOW FIELD

RAKE SUMMARY, RUN 434

PT	ALPHA BETA HEIGHT	VT1 ALP1 BET1	VT2 ALP2 BET2	VT3 ALP3 BET3	VT4 ALP4 BET4	VT5 ALP5 BET5	VT6 ALP6 BET6	VT7 ALP7 BET7
1	0.00	64.30	71.45	64.87	68.00	66.10	67.34	73.70
	0.00	3.00	1.00	2.00	-0.50	3.63	1.43	1.62
	57.02	3.11	0.79	1.34	1.00	2.51	3.50	4.76
2	0.00	63.57	72.37	66.50	67.00	64.72	66.20	72.60
	0.00	3.30	1.77	3.00	-0.05	3.64	2.70	3.34
	60.01	3.00	0.77	0.87	1.74	2.00	3.73	5.34
3	0.00	62.63	71.00	67.00	68.00	66.72	67.20	73.75
	0.00	4.30	2.12	3.31	0.21	4.87	4.15	5.43
	63.04	3.16	0.63	0.28	1.32	1.81	2.74	3.71
4	0.00	63.30	72.75	66.44	67.41	65.00	66.04	73.45
	0.00	4.65	2.20	3.51	0.72	4.58	4.10	4.95
	66.01	2.90	0.56	0.07	0.46	0.88	1.12	1.45
5	-0.01	63.22	71.90	67.07	68.44	66.40	66.95	73.63
	0.00	4.40	2.00	3.10	0.18	4.50	3.47	3.85
	68.01	2.85	0.44	-0.40	-0.46	0.18	0.20	0.83
6	-0.01	62.67	71.72	67.41	68.74	66.00	66.54	72.90
	0.00	4.10	1.93	3.01	-0.20	3.74	2.77	3.10
	72.01	2.20	0.21	-0.46	-0.70	-0.16	-0.07	0.71
7	-0.01	63.41	72.63	66.41	67.62	65.51	66.63	73.60
	0.00	4.22	1.88	2.92	-0.41	3.40	2.23	2.66
	76.00	2.12	-0.06	-1.57	-1.20	-0.04	-0.34	0.72
8	-0.01	63.04	73.00	67.34	67.70	65.01	66.56	73.01
	0.00	3.75	1.78	2.00	-0.11	3.02	2.00	2.41
	78.01	1.66	-0.25	-1.01	-0.90	-0.34	-0.27	0.73
9	-0.02	63.57	72.00	66.05	66.03	65.00	66.54	74.21
	0.00	4.37	1.66	2.36	-0.44	3.20	1.66	2.17
	81.04	1.00	-0.29	-1.30	-1.02	-0.24	-0.36	0.00
10	-0.02	64.46	72.00	66.15	67.27	65.46	66.75	73.04
	0.00	3.90	1.66	2.43	-0.02	3.12	1.50	2.29
	84.03	1.70	-0.44	-1.66	-0.50	-0.14	-0.49	0.00
11	-0.02	61.23	72.38	66.17	68.20	65.20	66.41	74.01
	0.00	4.05	1.32	1.61	-0.37	3.14	1.32	1.95
	87.02	2.16	-0.04	-1.70	-1.30	0.06	-0.24	0.00

Report Documentation Page

1. Report No.	2. Government Accession No.	3. Recipient's Catalog No.
NASA CR-178349		

4. Title and Subtitle	5. Report Date
Low Speed Wind Tunnel Test of a Propulsive Wing/Canard Concept in the STOL Configuration - Volume II; Test Data	September 1987
	6. Performing Organization Code
7. Author(s)	8. Performing Organization Report No.
V. R. Stewart	NA-87-0015
	10. Work Unit No.
9. Performing Organization Name and Address	11. Contract or Grant No.
North American Aircraft Operations Rockwell International Corporation P.O. Box 1259 Columbus, OH 43216	NAS1-17171
	13. Type of Report and Period Covered
12. Sponsoring Agency Name and Address	Contractor Report
National Aeronautics and Space Administration Langley Research Center Hampton, VA 23665-5225	14. Sponsoring Agency Code

15. Supplementary Notes

Langley Technical Monitor: John W. Paulson, Jr.
Final Report
Volume I: Test Description and Discussion of Results (NASA CR-178348)

16. Abstract

A propulsive wing/canard model has been tested at STOL operating conditions in the NASA Langley Research Center 4 x 7 meter wind tunnel. Longitudinal and lateral/directional aerodynamic characteristics were measured for various flap deflections, angles of attack and sideslip, and blowing coefficients. Testing was conducted for several model heights to determine ground proximity effects on the aerodynamic characteristics. Flow field surveys of local flow angles and velocities were performed behind both the canard and the wing.

This report consists of two volumes. Volume I (NASA CR-178348) describes the model, instrumentation, and test procedures; and includes an analysis of the data. Volume II (NASA CR-178349) contains all of the test data in three appendices. Appendix A presents tabulated six component force and moment data, Appendix B presents tabulated wing pressure coefficients, and Appendix C presents the flow field data.

17. Key Words (Suggested by Author(s))	18. Distribution Statement
Propulsive wing/canard STOL configuration Wind tunnel test Aerodynamic characteristics	Unclassified-Unlimited

19. Security Classif. (of this report)	20. Security Classif. (of this page)	21. No. of pages	22. Price
Unclassified	Unclassified	408	

NASA FORM 1626 OCT 86

For sale by the National Technical Information Service, Springfield, Virginia 22161-2171